NSRP
HVAC
APPLICATION PROTOCOL

Version 1.0

September 15, 1995

DISCLAIMER

These reports were prepared as an account of government-sponsored work. Neither the United States, nor the United States Navy, nor any person acting on behalf of the United States Navy (A) makes any warranty or representation, expressed or implied, with respect to the accuracy, completeness or usefulness of the information contained in this report/manual, or that the use of any information, apparatus, method, or process disclosed in this report may not infringe privately owned rights; or (B) assumes any liabilities with respect to the use of or for damages resulting from the use of any information, apparatus, method, or process disclosed in the report. As used in the above, "Persons acting on behalf of the United States Navy" includes any employee, contractor, or subcontractor to the contractor of the United States Navy to the extent that such employe, contractor, or subcontractor to the contractor prepares, handles, or distributes, or provides access to any information pursuant to his employment or contract or subcontract to the contractor with the United States Navy. ANY POSSIBLE IMPLIED WARRANTIES OF MERCHANTABILITY AND/OR FITNESS FOR PURPOSE ARE SPECIFICALLY DISCLAIMED.

Table of Contents

Table of Contents i
Table of Figures iii
List of Tables iv
Foreword v
Introduction vii
Fundamental Concepts ix
1. Scope 1
2. Normative References 3
3. Definitions and Abbreviations 4
3.1 Terms defined in ISO-10303-1 4
3.2 Terms defined in ISO 10303-41 5
3.3 Terms defined in ISO 10303-42 5
3.4 Terms defined in ISO 10303-43 5
3.5 Symbols and abbreviations 6
4. Information Requirements 8
4.1 Units of Functionality 8
4.1.1 approvals_and_versions 8
4.1.2 bills_of_material 9
4.1.3 connectivity check 12
4.1.4 equipment_arrangement 12
4.1.5 graphic_presentation 13
4.1.6 heating/cooling_load_analysis 13
4.1.7 hvac_duct_pressure_drop/sizing_analysis 14
4.1.8 hvac_fabrication_assembly_definition 15
4.1.9 hvac_installation/assembly_assembly-definition 16
4.1.10 hvac_test_definition 16
4.1.11 interference_analysis 18
4.1.12 support engineering 18
4.2 Application Objects 19
4.3 Application assertions 36
4.3.1 Ship product item configuration management 37
4.3.2 Fundamental concepts 37
4.3.3 Functional requirements 40
4.3.4 Definitions 42
4.3.5 Business rules 42
4.3.6 Configuration management entity descriptions 46
5. Application Interpreted Model 50
5.1 Mapping table 50
5.1.1 Principal entities 50
5.1.2 Configuration management 51
5.1.3 External reference 54
5.1.4 HVAC system 54
5.1.5 Connectivity 55
5.1.6 Flow 56
5.1.7 Heating and cooling 58
5.1.8 Testing 59
5.1.9 Bill of material 60

5.1.10 Attachments....67
5.1.11 Insulation....69
5.1.12 HVAC assemblies....69
5.1.13 Shape and path representation....70
5.1.14 Path....73
5.1.15 Controls....74
5.2 AIM EXPRESS short listing....75
6. Conformance Requirements....138
6.1 Processor conformance requirements....138
6.2 NIDDESC HVAC application protocol test groups....139
6.3 NIDDESC HVAC application protocol test case descriptions....139
6.3.1 TG-1: HVAC system structure....139
6.3.2 TG-2: HVAC system flow data....140
6.3.3 TG-3: HVAC system test - system performance and balance test....140
6.3.4 TG-4: engineering part data....141
6.3.5 TG-5: network connectivity....143
6.3.6 TG-6: attachments....145
6.3.7 TG-7: insulation....146
6.3.8 TG-8: HVAC paths....147
6.3.9 TG-9: HVAC assembly....148
6.3.10 TG-10: HVAC joint....149
6.3.11 TG-11: miscellaneous queries....149
6.3.12 TG-12: catalog external reference....150
Annex A....153
Annex B....154
Annex C....155
Annex D....156
Application activity model....157
E.1 Application activity model definitions and abbreviations....157
E.2 Application activity model figures....157
Annex F....165
Application reference model....165
Distribution systems shape implementation....215
Annex G....225
Annex H....226
Annex J....227
Bibliography....227

Table of Figures

Figure 1 Network Connectivity x
Figure 2 Attachment Connectivity xi
Figure 3 Subtypes xii
Figure 4 Top Level Subtype Examples xv
Figure 5 External Reference xvii
Figure E. 2 Design HVAC System 159
Figure E. 3 Perform Contract HVAC System Design 160
Figure E. 4 Perform Functional HVAC System Design 161
Figure E. 5 Perform Detailed HVAC Design 162
Figure E. 6 Perform HVAC Production Engineering 163
Figure E. 7 Develop HVAC System Support Information 164
Figure F. 1 Ship Product Item 166
Figure F. 2 Promotion and Change Incorporation 167
Figure F. 3 Change and Change Alternatives 168
Figure F. 4 Configuration Approva 169
Figure F. 5 Hull Applicability 170
Figure F. 6 External References 171
Figure F. 7 Engineering System Taxonomy 172
Figure F. 8 Specific Engineering Part Taxonomy 173
Figure F. 9 Engineering Part Occurrence Taxonomy 174
Figure F. 10 Distribution Systems Planning Model 175
Figure F. 11 Specific Engineering Parts 176
Figure F. 12 Weight Condition 177
Figure F. 13 Engineering Part Occurrence Level 178
Figure F. 14 Specific Path Arc 179
Figure F. 15 Distribution Paths 180
Figure F. 16 Distribution Ends 181
Figure F. 17 Distribution Interconnection 182
Figure F. 18 Distribution Interconnection 183
Figure F. 19 Attached and Attaching Objects 184
Figure F. 20 Example Attaching Parts and Attachment Configurations 185
Figure F. 21 Insulation Model 186
Figure F. 22 Distribution Interface 187
Figure F. 23 Interface SPIV Occurrence Implementation 188
Figure F. 24 Specific Equipment 189
Figure F. 25 Power 190
Figure F. 26 Equipment Occurrence 191
Figure F. 27 Equipment Mounting Data 192
Figure F. 28 Instrument 193
Figure F. 29 Basic Control Model 194
Figure F. 30 Control Device Occurrence 195
Figure F. 31 HVAC System Model 196
Figure F. 32 HVAC Interconnection Occurrence 197
Figure F. 33 HVAC Test 198
Figure F. 34 HVAC System Performance and Balance Test 199
Figure F. 35 Watertight Closure Test 200
Figure F. 36 Air Conditioning Load Test 201

Figure F. 37 Specific HVAC Part 202
Figure F. 38 HVAC Port Types 203
Figure F. 39 HVAC Part Occurrence 204
Figure F. 40 Specific HVAC Part Taxonomy 205
Figure F. 41 HVAC Part Occurrence Taxonomy 206
Figure F. 42 HVAC Equipment Taxonomy 207
Figure F. 43 HVAC Fan/Coil 208
Figure F. 44 HVAC Heater 209
Figure F. 45 HVAC Active Filter 210
Figure F. 46 Access Opening 211
Figure F. 48 HVAC Assembly 213
Figure F. 49 HVAC Compartment/Load 214
Figure F. 50 Shape Relationship: Part Envelope to Engineering Part 219
Figure F. 51 Specific Path Arc/Node to Path Arc/Node 220
Figure F. 52 Specific Distribution End to Specific Path Node to Specific Path Arc to Specific Engineering Part 221
Figure F. 53 Distribution End Occurrence to Path Node to Path Arc to Engineering Part Occurrence 222
Figure F. 54 Engineering Part Occurrence to Specific Engineering Part; Distribution End Occurrence to Specific Distribution End 223
Figure F. 55 Distribution End Occurrence to Path Node to Path Arc to Distribution Interconnection Occurrence 224

List of Tables

Table 1 Conceptual Subtype Levels xiii
Table 2 Positional Dependencies 215

Foreword

This future Part of ISO 10303 has been prepared by the Navy-Industry Digital Data Exchange Standards Committee (NIDDESC).

The need for reliable mechanisms for the exchange of data describing HVAC (and other distribution system) products between dissimilar systems has been recognized as an important capability for several years by industry and government organizations. In particular the U.S. Navy has been very interested in acquiring this capability to support its acquisition and support of naval ships. As a result of this interest the NIDDESC (Navy-Industry Digital Data Exchange Standards Committee) was formed in 1987 to pursue the development of this capability. Also, the IGES/PDES Organization (IPO) in the U.S. and the International Standards Organization's "Standard for the Exchange of Product Model Data" (ISO/STEP) groups have been pursuing the development of a single international standard for the representation of a wide range of product types.

NIDDESC has worked within the IPO/STEP Architecture, Engineering and Construction (AEC) Committee in developing the models of information employed in this AP. By so doing, much of the HVAC information specified herein has been validated by representatives of various industries other than naval ship design, construction and maintenance. While this AP as written may be used to support the development of translators for other HVAC domains, its objective is to support shipboard HVAC products. The ISO/STEP HVAC AP will extend this specification to support non-ship HVAC systems. It should be noted that, while this application protocol has been developed in conjunction with the ISO/STEP AEC committee and utilizes many STEP entities and constructs in its implementation, it is not a formally approved STEP AP.

This first revision of NSRP 0426 brings the HVAC application protocol into agreement with the ISO 10303 (STEP) Initial Release.

The following annexes are normative: A,B,C, and D.

The following annexes are informative: E,F,G,H,and J.

This Part is one in a series of Parts which together, when approved, will form the International Standard ISO 10303 — Industrial automation systems and integration — Product data representation and exchange. The other Parts are as follows:

— Part 1 Overview and fundamental principles;

— Part 11 Description methods: The EXPRESS language reference manual;

— Part 21 Implementation methods: Clear text encoding of the exchange structure;

— Part 22 Implementation methods: Standard data access interface specification;

— Part 31 Conformance testing methodology and framework: General concepts;

— Part 32Conformance testing methodology and framework: Requirements on testing laboratories and clients;

— Part 41 Integrated generic resources: Fundamentals of product description and support;

— Part 42 Integrated generic resources: Geometric and topological representation;

— Part 43 Integrated generic resources: Representation structures;

— Part 44 Integrated generic resources: Product structure configuration;

— Part 45 Integrated generic resources: Materials;

— Part 46 Integrated generic resources: Visual presentation;

— Part 47 Integrated generic resources: Shape variation tolerances;

— Part 101 Integrated application resources: Draughting;

— Part 201 Application protocol: Explicit draughting;

— Part 203 Application protocol: Configuration controlled design;

— NSRP 0424 Application protocol: NIDDESC piping

— NSRP 0425 Application protocol: NIDDESC electrical/cableway

— NSRP 0428 Application protocol: NIDDESC outfit & furnishings

— NSRP 0429 Application protocol: NIDDESC ship structure

The reader may obtain information on the other Parts of ISO 10303 from the ISO Central Secretariat.

Introduction

ISO 10303 is an International Standard for the computer-interpretable representation and exchange of product data. The objective is to provide a neutral mechanism capable of describing product data throughout the life cycle of a product, independent of any particular system. The nature of this description makes it suitable not only for neutral file exchange, but also as a basis for implementing and sharing product databases and archiving.

This International Standard is organized as a series of parts, each published separately. The Parts of ISO 10303 fall into one of the following series: description methods, integrated resources, application protocols, abstract test suites, implementation methods, and conformance testing. The series is described in ISO 10303-1. This Part is a member of the application protocol series.

This Part specifies an application protocol (AP) for the exchange of HVAC information. The Application Protocol specifies the content and format of data describing HVAC systems and attached components/equipment. This data is to be exchanged between dissimilar product definition systems for use in a defined set of applications. These applications apply to several stages of the life cycle of the HVAC products defined.

The purpose of such a specification, or application protocol (AP), is to support the exchange of HVAC product data between organizations with a common need for that data. These organizations include product owner and design agent, design agent and fabricator, design agent and operator, owner and maintenance organization, etc. Such exchange can only be realized after translation software has been developed based on this specification to input (preprocess) and output (postprocess) the data. Translation software must be implemented on both systems between which data is to be exchanged. Its purpose is to convert data to and from the system's local representation to the neutral representation defined by this AP. This AP also serves to define tests of such translators to validate certain aspects of their operation.

This application protocol defines the context, scope and information requirements for the exchange of HVAC information and specifies the integrated resources necessary to satisfy these requirements. Application protocols provide the basis for developing implementations of ISO 10303. Additionally, this application protocol enumerates the conformance requirements.

Application protocols are the basis for developing abstract test suites for the conformance testing of implementations.

Clause 1 defines the scope of the application protocol and summarizes the functionality and data. An application activity model, the basis for the definition of the scope, is provided in annex E. The information requirements of the application are specified in Clause 4 using terminology appropriate to the application. A graphical representation of the information requirements, referred to as the application reference model, is given in annex F.

Resource constructs are interpreted to meet the information requirements. This interpretation produces the application interpreted model (AIM). This interpretation, given in Subclause 5.1, shows the correspondence between the information requirements and the AIM. The short listing of the AIM specifies the references to the integrated resources and is given in Subclause 5.2. The complete AIM EXPRESS listing is given in annex A. A graphical representation of the ARM is

given in annex F. Additional requirements for specific implementation methods are given in annex C.

Fundamental Concepts

Application protocols

Application protocols are specifications of the information content and format, and the conventions and rules governing the use of that information within specific applications, or end uses of the information, for a well-defined subject area or domain. This application protocol's domain is HVAC products as found in large, engineered products such as ships, and chemical and power generating plants.

The five major elements of an application protocol are: (1) a scope and requirements statement, (2) an application reference model (ARM) of the supported information, (3) an application interpreted model (AIM) specifying how the information is mapped into a specification such as STEP, (4) an AP format specification with a usage guide, and (5) conformance requirements and test cases.

The scope and requirements statement defines the target applications which are supported by the AP. For each application, information requirements are defined. These requirements are expressed at a fairly high level in terms of the objects, relationships between objects and categories of data describing these objects and relationships. For this AP this information is contained in section 1.

The information content supporting the applications enumerated in the scope and requirements statement is formally defined in the ARM. The ARM is an information *model* documenting the information structures supporting the subject applications and providing the baseline for the development of candidate interpreted models. For this AP, the ARM is presented in two forms: a NIAM (Nijssen Information Analysis Methodology) (graphical) model, and an EXPRESS textual model. EXPRESS is defined in ISO DIS/10303-11. This ARM has been interpreted in terms of a pool of both STEP entities where they exist and are thought to be reasonably stable, and non-STEP entities, to create the AIM. Non-STEP entities have been used in situations where no STEP entity exists providing the desired functionality and in situations where available STEP entities are considered as yet unstable. The AIM for this AP is defined in section 5.2.

The AP format specification and usage guide defines the format and structure of the "physical file" representation for the data covered by the AP and guidelines for preparing, handling, verifying and processing such files

Versioning and configuration management

The basic building block of the models used by this AP is the *ship_product_item*, an abstract entity further specified through the definition of its subtypes. Each *ship_product_item* is versioned. That is, as an SPI undergoes modifications, unique versions of it are created and stored in a list of versions serving as a historical record of the SPI. A version of an SPI can be created in response to any change in the item, but need not be.

The purpose of a *configuration_spi* is to serve the same configuration accounting function served manually by physical documents, particularly drawings. In a manual system, a drawing at a particular revision defines the configuration of most of the objects depicted on that drawing.

(Some of the objects depicted, such as standard details or arrangement backgrounds, are controlled on other drawings.) *Configuration_spi* provide this same functionality for the entities they aggregate.

An equally important feature of configuration status accounting is the specification of *approval* status to each SPI version *in the context of* its controlling configuration_spiv. This facility allows entities declared to be "unapproved" to be identified and potentially given specialized treatment. The use of this attribute can provide the same functionality as the use of "hold-ups" or "reservations" on physical drawings indicating that portions of the drawing should not be used or used only with caution.

The data structures supporting this process of "promoting" an SPI from one version to another, as well as tracking the status of revisions to SPIs, are documented in section 4.3.

Use of external component catalogs

A key feature of this AP is its reliance on the availability of external (to the transfer dataset) component catalogs. Entries in these catalogs carry the vast majority of component descriptive information including the specification of component geometric representation. An Occurrence of a component contained in the transfer data set described by this AP will almost exclusively refer ("point") to an external catalog entry for its definition.

Thus, such catalogs must be available on both the sending and receiving site systems in order for the transfer to be effective. A separate AP (NIDDESC library parts application protocol) specifies the content and format of component catalog data exchanges.

Connectivity

A key feature of HVAC and all distribution products is the connectivity of components of the product to form networks. In general, connectivity between HVAC objects is established by defining a relationship between the d*istribution ends* of connecting objects and a d*istribution interface*. Figure 1 depicts this fundamental structure.

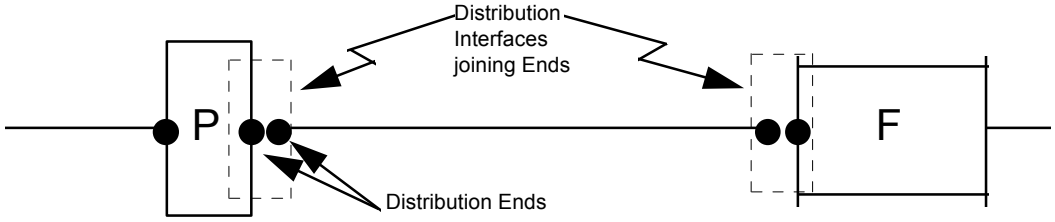

Figure 1 Network Connectivity

A second type of general connectivity used throughout applications is the a*ttachment.* An *attachment* defines a joining of an *attached/penetrating_object* such as an *engineering_part* or an *hvac_section* with an *attaching/penetrated_object* at their *attachment_ends* (see figure 2). *Attachments* are <u>not</u> used in establishing network connectivity.

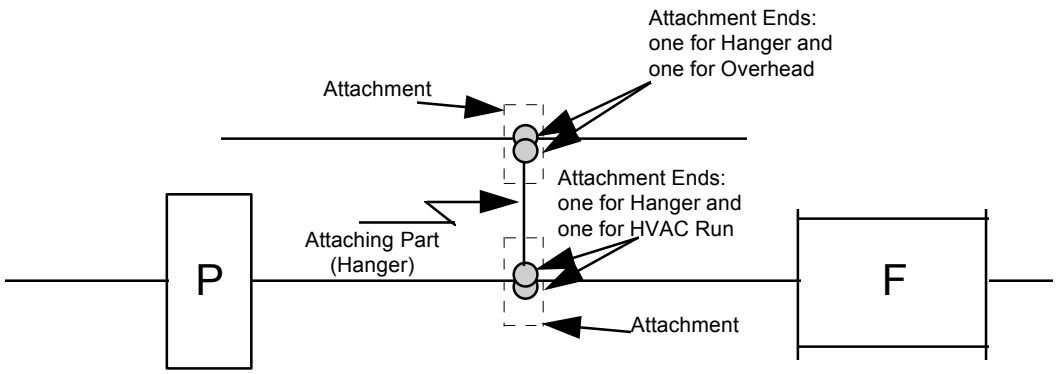

Figure 2 Attachment Connectivity

External references

Transfers of product model data invariably involve references to objects not present in the transferred model. Three types of such references are handled by this AP.

The first type of such external reference is from an internal occurrence of an engineering part to an external catalog of such parts containing the geometry and other data describing the part. In this case, the referencing part (occurrence) must carry sufficient information to allow the geometry of the part to be created at the same location and orientation in the receiver's model that it had in the sender's, and to maintain its connectivity to adjoining parts.

The second type external reference is from an internal occurrence of an *engineering part, distribution interconnection* (e.g. HVAC section) or e*ngineering system* to another such object (or *space*) with which it is topologically or spatially related, but which is not present in the transferred model nor is it defined in a catalog. Examples of this situation include a connection between an HVAC duct and an undefined piece of equipment, between a hanger and a piece of structure, and between an equipment and the compartment where it is located. The referenced object may or may not have been received by the receiver previously and, therefore, may or may not be available when the model is received. In this situation the referencing object must preserve the ability to identify correctly and, if required, locate its connection with the referenced object until such time as the referenced object is integrated with the referencing object's database.

The third external reference type is a logical reference to an object that is not a product model object. Examples of such referenced objects include all types of physical documentation including drawings, specifications and publications (e.g. training manuals or operating guides). This reference type is intended to facilitate both the use of automated interfaces to other information systems at the receiving site and manual cross referencing.

Product structure

A key requirement of this AP is the ability to pass HVAC data describing various hierarchical structures of HVAC model objects. This facility is used to model the decomposition of a high level object, such as an *engineering system*, into lower level *engineering systems* and their constituent e*ngineering parts* and *distribution interconnections*. *Configuration_spi* is also a type

of product structure object as is a*ssembly*. The *spiv_relationship* permits all *ship_product_item_versions* to be structured via several different product structures and, similarly, to be members of many product structured items.

Similar to the situation described in External References, objects in a product structure may connect with items in another product structure not present in the product model transferred. This situation is identical to the second type of external reference and must be handled in like fashion.

Structured information - subtyping

The concept of subtyping in information modeling provides the ability to structure information from a generalized, high level entity down to a very specialized, low level type of that high level entity. The HVAC information described in this AP makes extensive use of this concept.

Figure 3 depicts an example of this concept. In this figure, the entity A has two subtypes (indicated by the arrows pointing to A), B and C. The key feature of a subtype, or "is a" relationship, is that all subtypes of a supertype inherit all of the properties of the supertype. If the subtypes are "non-exclusive", it is possible for an instance of A to possess the characteristics of *both* B and C whereas if the subtypes of A are exclusive, an instance of A can possess the characteristics of B *or* C, but not both.

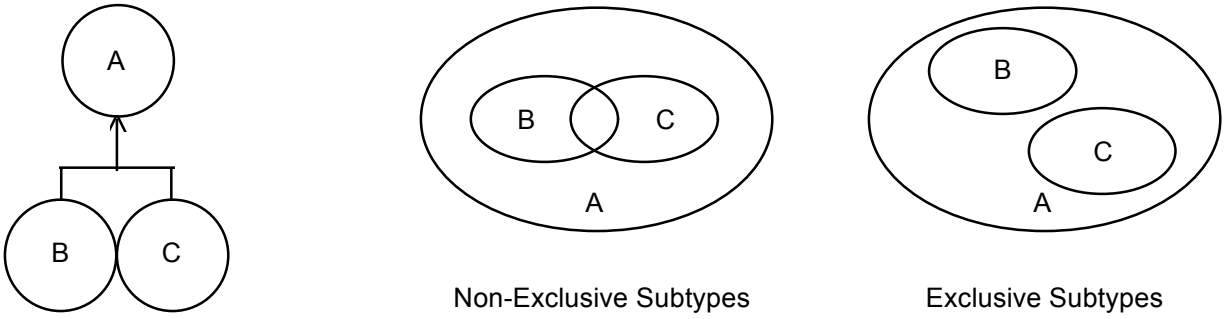

Figure 3 Subtypes

Table 1 depicts the conceptual levels of subtypes employed in the models in this AP beginning with *ship_product_item_version*. These levels are called conceptual levels because they are not all implemented for each type of SPIV. For some types, some levels are skipped, and for others, the levels may be applied out of the sequence portrayed in this figure. However, they do represent the *typical* subtype organization used throughout the models in the ARM.

Table 1 Conceptual Subtype Levels

Level No.	Name	Description
1.	SPIV	ship_product_item_version - the top level
2.	Level	"Level" refers to the generic, specific and occurrence subtypes.
3.	Class	The class level differentiates between *product_spiv, end_spiv, space_spiv, configuration_spiv* and *user_defined_collection_spiv.*
4.	Main Type	The first level of SPIV differentiation within class.
5.	Subtype	The second level of SPIV differentiation within class. This is the "distribution object" level.
6.	Discipline/ Function	The third level of SPIV differentiation within cass. This level typically is the first where HVAC objects are specifically identified.
7.	Speciality	The first of potentially several levels of specialization of a level 6 object. For example, the level 6 object "hvac_interconnection_occurrence" has a level 7 subtype of "HVAC_section_occurrence."
8-N	Sub-Speciality	Levels of increasing specialization within a Level 7 item. These levels are typically used only in the product_spiv subtype breakdown when it becomes necessary to identify a type of specialized product item which has unique requirements for attributes or specialized relationships.
Last	Specificity	This level differentiates between the "design" definition of the parent object and its "implementation" definition. This subtype differentiation is selectively used at higher levels when necessary.

Figure 4 depicts the five top-level subtypes. These first five levels serve as the foundation for this AP as well as others in the domain of distribution systems (e.g., electrical/cableway and piping). The subtyping facility is used in the piping information models to define different attributes and relationships at different levels of (sub)type of entity in the subtype "tree". For example, all *ship_product_items* (SPIs) have unique *ID*s and a list of versions (*ship_product_item_versions*). At a much more specialized level, a *specific_hvac_port* is a type of SPI with an attribute of *"specific_hvac_port_type"*. Nearly all items in the enclosed HVAC models are types of SPI, and hence have *ID*s and *SPI version*s. Only the *specific_hvac_port* type of SPI has *specific_hvac_port_type*.

It is important to the interpretation of this AP to understand that an SPI and, for example, its *specific_hvac_port* subtype, both describe the same item. Because of the subtype inheritance described above, all of the attribute and relationship characteristics of an entity which is a common supertype of many subtypes are shared by all of its subtypes in an unambiguous way.

Further, the definition of specific attributes and relationships for a supertype entity applying to all its subtypes makes implementation of the physical data structures to hold such data more compact than if these attributes and relationships were defined independently for each of the entity's subtypes. Two of the more important subtype classifications are described in the following subsections.

Generic, specific and occurrence definition levels

The models in this AP make a distinction between a class or family of objects (the generic definition), a specific member of the class or family (the specific definition), and an instance of a specific class member in a particular usage (the occurrence definition). This distinction occurs in level 2 of the subtype tree (see table 1).

This "level" concept is used to make the distinction between a class of parts, such as all vaneaxial fans, a specific vaneaxial fan such as a 300 CFM fan, and an instance or usage of the 300 CFM vaneaxial fan in a particular location within an HVAC run or system. Generic objects can be implemented either as a set of specific objects or as a parametric object which, given some values for defined parameters, results in a specific object. Thus, a generic object could be manifested as a library of specific objects, a component type symbol or a "macro" program used to create specific/occurrence objects. A specific object can be thought of as an entry in a traditional parts catalog or library. (Note that generic objects could reside in a library or catalog as well.) And an occurrence level object is an instance of a specific object that has been used in a particular usage giving it uniqueness (such as position and orientation).

Specificity

"Specificity" here refers to two different aspects of a *ship_product_item_version* differentiating between the item as a design object and the (same) item as physically implemented. These two aspects are modeled as two non-exclusive subtypes of an item called "design" and "implementation", respectively. These subtypes usually, though not always, occur only once at the bottom of the subtype tree. (Exceptions include *engineering_part_occurrence* and *specific_engineering_part*, and *attachment_occurrence*.) The rule used in making this distinction is that an item defined only by its "design" subtype information has not been sourced, or could not be built from just this information. An item defined by its "implementation" subtype has been sourced or could be built from its complete set of information. The main reason for these subtypes is to make clear the distinction between the design requirements for an item and its chosen implementation by separating its design requirement/intent attributes from its implementation/physical attributes. There is an implied "is_implemented_by" relationship between an item's design subtype and its implementation subtype.

It should be noted that in practice an object being designed undergoes a period of nearly continuous refinement in which its degree or state of specificity increases. It is not considered feasible or practical to define each such state in terms of the data elements characterizing it, for all possible product item types. <u>The distinction made by the "design" and "implementation" subtypes is simply that for the parent item, design definition has been completed for the current version when its "implementation" information has been specified and approved.</u>

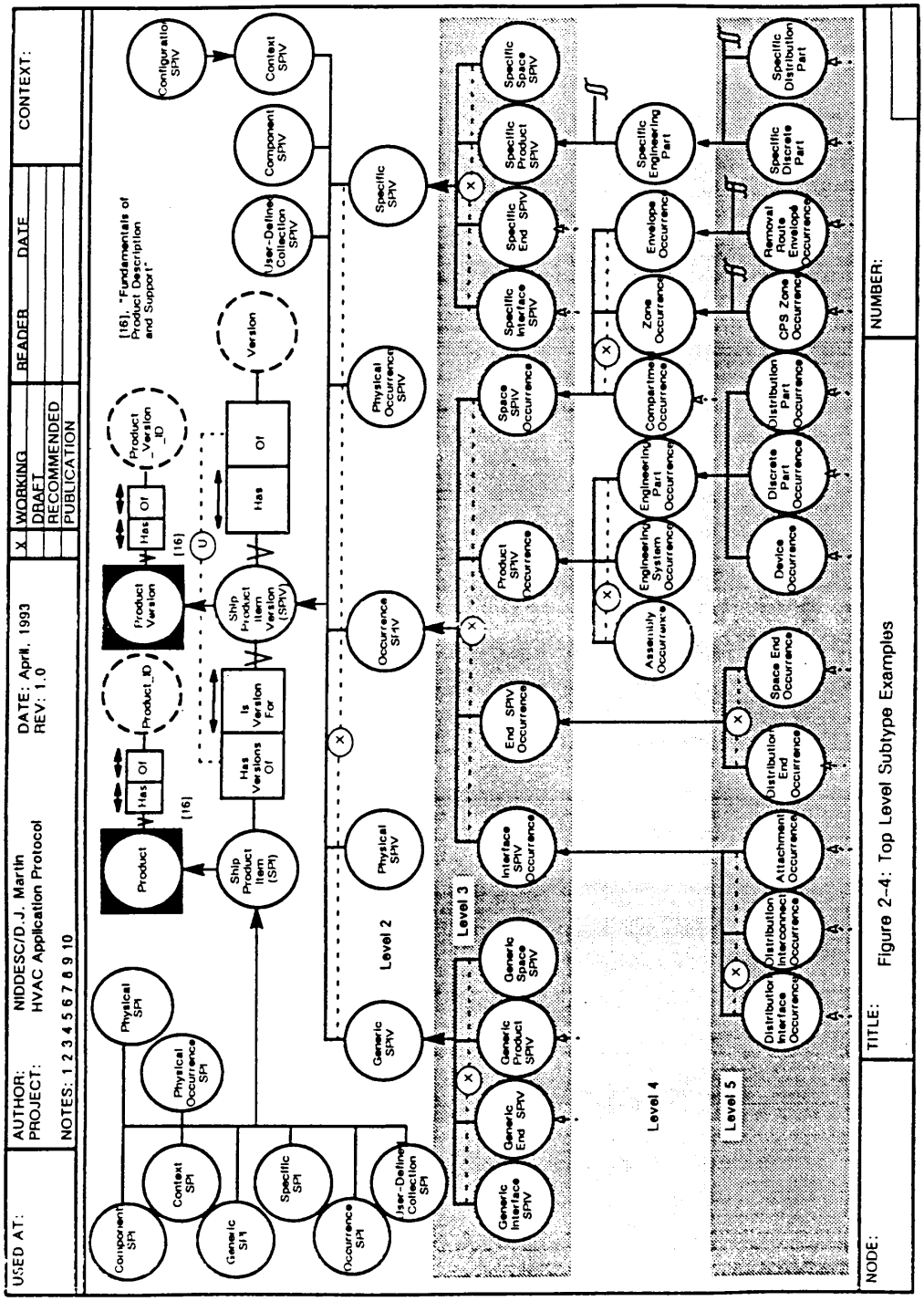

Figure 4 Top Level Subtype Examples

Item identification

Three classes of item identification requirements are presented by this AP. They are:

— The identification of a given product item must be unique, independent of the transfer data sets in which it may be present. In other words the item's identification must demonstrate "persistent uniqueness". This requirement exists due to the versioned nature of ship product items. The address space for ship product items is therefore the overall product model (e.g. total ship, ship zone, alteration project) of which they are components.

— The identification scheme for product items must not require that sending or receiving organizations adhere to a *particular* product item identification practice which in itself requires significant additional administrative overhead to effect. For example, it should not be necessary for organizations to set up separate data control functions simply to insure that items are consistently identified in transfer data sets. Similarly, organizations should not have to modify their product definition process in order to accommodate a *particular* identification scheme.

— As discussed above, external references to library items and items which may or may not have been transferred at another time must be supported.

These requirements have resulted in an identification and referencing scheme described in the section below.

External reference access model

As noted, three types of data exchange situation require the use of an item not contained in the exchange data set where it is referenced. These are:

— The reference to an item whose definition is stored in a defined external library or catalog;

— The reference to an item whose definition is not stored in the exchange data set or in an external library or catalog. The item's definition may be stored in an exchange data set previously transmitted. However, the item's definition may *not* have been transmitted previously. It may be sent subsequently, or not at all.

— The reference to external descriptive data not addressed by any exchange application protocol, but rather intended to serve as reference data for users of the exchanged data. This latter category is handled informally through the use of attributes containing character strings naming the external reference information source.

The information model supporting the first two of these situations is depicted in figure 5. The functionality of this model and its assumptions are:

— <u>Any</u> ship product item version may be externally represented in the context of a particular exchange. Therefore, the set of all SPIVs is subdivided into two classes, "internal" and "external". The class a particular SPIV falls into is defined by its mandatory "reference_definition_source" attribute.

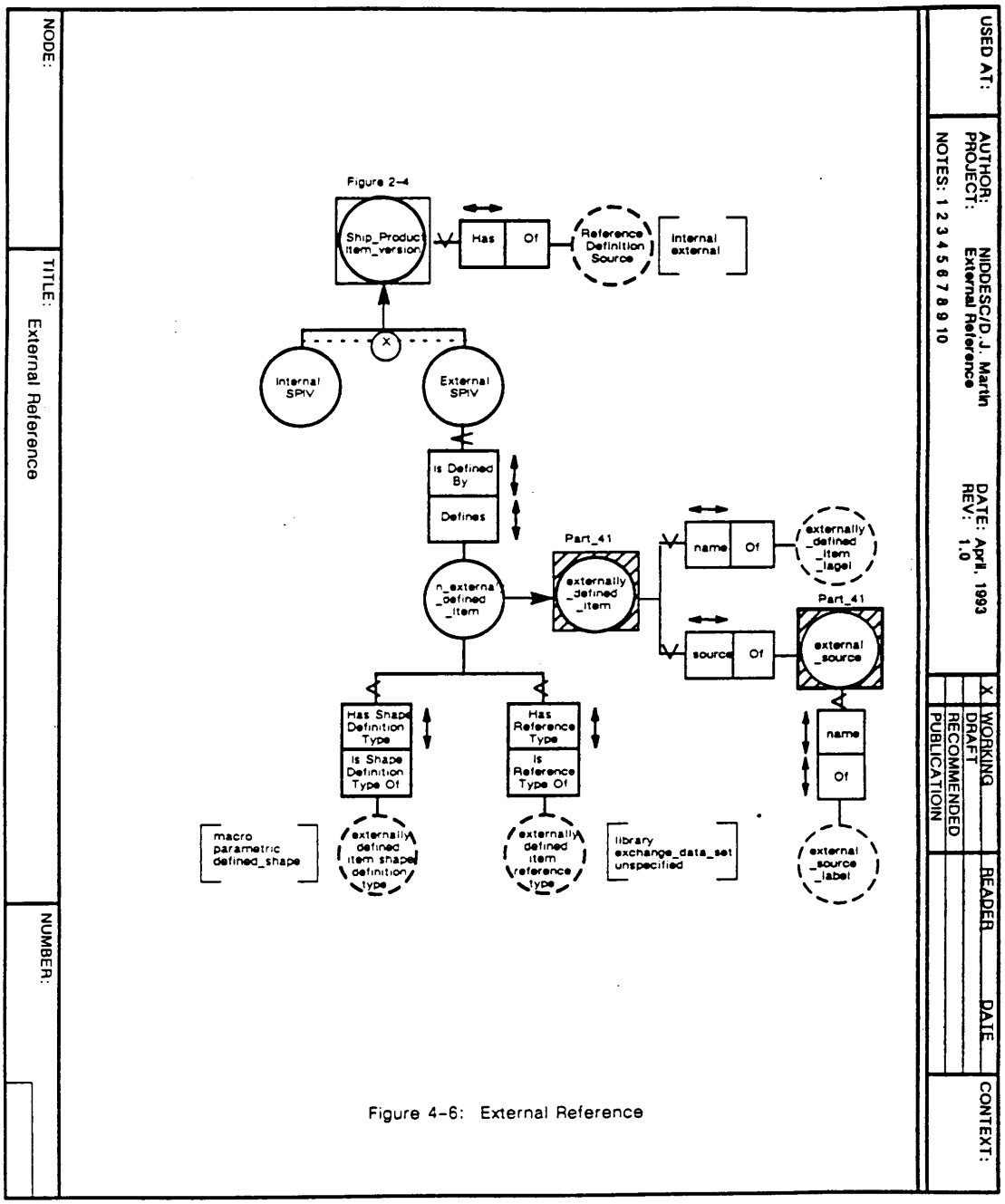

Figure 5 External Reference

The test to be applied in determining how a particular SPIV is to be classified by the sending site is whether or not all its *mandatory* data is defined. Entities without all mandatory data defined *must* be classified as external. However, entities with all mandatory data defined *may be* classified as external. This means:

1. SPIV entities may by sent and declared internal in the absence of their associated shape data (which is non-mandatory). This capability allows exchanges of non-graphic information without requiring the receiver to bind a shape definition to each received entity.

2. Entities fully defined on the sender's system may be declared external with a reference_type of either "library", or even "unspecified". The latter capability could be used, for example, in combination with an item's approval_status, to prohibit the transfer of an item's definition data, while at the same time notifying the receiving site of its existence by declaring it in an exchange data set.

Specification of whether an item is internal or external to an exchange data set is left to procedures established between sender and receiver.

— An SPIV entity may have all of its mandatory attributes defined, and thus be declared "internal", while some of its attributes are themselves SPIVs declared "external". The most common example of this will be an engineering part occurrence defined as internal while its (mandatory) "is_occurrence_of" specific engineering part is defined as "external"/"library".

— SPIV entities classified as external must have a reference type defined as "library", "exchange_data_set" or "unspecified". The use of "exchange_data_set" and "unspecified" allows the sender to account for exchange sequence. It is recommended that an item sent previous to the current exchange (and unchanged from that point) be declared external/"exchange_data_set" with the identity of the exchange data set in which the item was sent given as the item's external_source.name.

SPIV entities not yet sent nor defined in an external catalog should be declared "unspecified" to inform the receiver not to search for the item's definition.

— SPIV entities classified as "external"/"library" should define the library/catalog name in external_source.name and the item's catalog identifier in externally_defined_item.name.

— Occurrence_SPIVs defined as external *must* refer to an exchange_data_set or be unspecified.

Identifier transformation

Because of the potential incompatibility of any foreign (i.e. non-native) identification scheme with a receiving or sending product definition system's internal form, a mapping to and from this internal repre-sentation is assumed as a capability of translators implementing this specification. The details of this transformation are left to implementors.

Industrial automation systems and integration —

Product data representation and exchange —

Application Protocol : Ship HVAC

1. Scope

NSRP 0426 specifies the use of the integrated resources necessary for the scope and information requirements for the design of HVAC systems.

HVAC systems are used to convey and condition air within a variety of engineering products. Generally, an HVAC system is comprised of a network of HVAC duct, HVAC components, and is attached to equipment such as fans and air conditioning units. Large HVAC systems are generally attached to some supporting structure through the use of supports and hangers. insulation and vibration or sound damping parts (*Attaching Parts*) are often attached to HVAC systems.

HVAC systems are a type of *distribution system*, which is in turn a type of *engineering system*, which is itself a type of *system*. Much of the information pertinent to an *HVAC system* is applicable to general *distribution systems*, or to *engineering systems*, and so is represented at these higher (supertype) levels, as applicable, rather than at the HVAC system level.

The scope of this AP is the exchange of computer-based product data describing HVAC systems and components. It defines a base of required data supporting a corresponding set of required HVAC-related activities. These supported activities, and some unsupported but related activities, are depicted in annex E.

This AP concerns itself with four major application areas corresponding to major stages of HVAC product life cycle:

— contract/functional design

— detail design

— production engineering

— support engineering

Users/developers of HVAC product information in these stages of product life cycle have different information requirements and views of the product. Users in the **contract design** stage design view an HVAC system principally as a functional network of equipment and terminals.

Functional design stage designers see HVAC in much the same way but develop and use much more detailed information concerning operating states of a system, and the characteristics of subnetworks of HVAC within an overall system (HVAC sections) in terms of flow characteristics and insulation requirements. The functional view is typically used to identify a preliminary purchasing bill of material in which purchase specification and long lead time equipments and components are identified. The

functional design stage view is also the one which, along with contract specifications, is used in formulating and performing systems testing following installation.

Because of the commonality of views in the contract and functional design stages, they have been combined for the purposes of this AP into a single application area.

Detail design users have a 3-D, arrangements view of HVAC. They are concerned with the arrangement in 3-D space of HVAC ducting and components meeting the applicable system specification, and in insuring the arranged components are free from interferences with the surrounding environment. This view of the data is also the view typically supporting the final purchasing bills of material.

Production engineering stage users are concerned with defining HVAC assemblies and the information needed to fabricate the pieces of these assemblies. This information can consist of cutting and forming instructions, joining instructions/specifications and coating instructions. They also specify the installation processes to be used to install such assemblies in the final product and the post-installation tasks to be carried out. The production engineering function creates and makes use of the production bill of material view.

The HVAC product view taken by users in the **support engineering** stage is mainly that of the functional design, but from the standpoint of defining the support requirements of the product. Such requirements include spare parts complements, maintenance procedures and related documentation, and operational specifications and documentation.

A more detailed view of the scope for the NIDDESC HVAC AP, in an $IDEF_0$ representation, may be found in annex E, the Appliction Activity Model. In that model, the significant activities of HVAC have been examined and modeled. Annex E also provides a more in-depth discussion of the capabilities supported by this AP.

2. Normative References

The following standards contain provisions constituting, through reference in this text, provisions of this standard. At the time of publication the editions indicated were valid. All standards are subject to revision and parties to agreements based on this standard are encouraged to investigate the possibility of applying the most recent editions of the standards indicated below. Members of the IEC and ISO maintain registers of currently valid international standards.

ISO DIS/10303-1, *Industrial automation systems and integration Product data representation and exchange Part 1: Overview and fundamental principles.*

ISO DIS/10303-11, *Industrial automation systems and integration Product data representation and exchange Part 11: Description methods: The EXPRESS language reference manual.*

ISO DIS/10303-21, *Industrial automation systems and integration Product data representation and exchange Part 21: Implementation methods: Clear text encoding of the exchange structure*.

ISO CD/10303-22, *Industrial automation systems and integration Product data representation and exchange Part 22: Implementation methods: Standard data access interface specification.*

ISO DIS/10303-31, *Industrial automation systems and integration Product data representation and exchange Part 31: Conformance testing methodology and framework: Requirements on testing laboratories and clients.*

ISO CD/10303-32, *Industrial automation systems and integration Product data representation and exchange Part 32: Conformance testing methodology and framework: General concepts.*

ISO DIS/10303-41, *Industrial automation systems and integration Product data representation and exchange Part 41: Integrated generic resources: Fundamentals of product description and support.*

ISO DIS/10303-42, *Industrial automation systems and integration Product data representation and exchange Part 42: Integrated generic resources geometric and topological representation.*

ISO DIS/10303-43, *Industrial automation systems and integration Product data representation and exchange Part 43: Integrated generic resources: Representation structures.*

ISO DIS/10303-44, *Industrial automation systems and integration Product data representation and exchange Part 44: Integrated generic resources: Product structure configuration.*

ISO 10303-45, *Industrial automation systems and integration Product data representation*

	and exchange Part 45: Integrated generic resources: Material.
ISO DIS/10303-46,	*Industrial automation systems and integration Product data representation and exchange Part 46: Integrated generic resources: Visual presentation.*
ISO 10303-47,	*Industrial automation systems and integration Product data representation and exchange Cableway.*
NSRP 0424,	*Application protocol: NIDDESC piping.*
NSRP 0425,	*Application protocol: NIDDESC electrical/cableway.*
NSRP 0428,	*Application protocol: NIDDESC outfit and furnishings*.
NSRP 0429,	*Application protocol: NIDDESC ship structure.*

3. Definitions and Abbreviations

3.1 Terms defined in ISO-10303-1

This part of NSRP-0426 makes use of the following terms defined in ISO 10303-1:

— abstract test suite;

— application;

— application activity model (AAM);

— application interpreted model (AIM);

— application protocol (AP);

— application reference model (ARM);

— component;

— conformance testing;

— context;

— data;

— implementation method;

— information;

— integrated resource;

— product data;

— resource construct.

3.2 Terms defined in ISO 10303-41

This part of NSRP-0426 makes use of the following terms defined in ISO 10303-41:

— approval_status;

— date_and_time;

— externally_defined_item;

— identifier;

— integer;

— label;

— organization;

— person_and_organization;

— product;

— product_version;

— real;

— text.

3.3 Terms defined in ISO 10303-42

This part of NSRP-0426 makes use of the following terms defined in ISO 10303-42:

— cartesian_point;

— curve;

— geometric_curve_set;

— geometry;

— point;

— surface.

3.4 Terms defined in ISO 10303-43

This part of NSRP-0426 makes use of the following terms defined in ISO 10303-43:

— representation.

3.5 Symbols and abbreviations

The following abbreviations apply to this application protocol:

— AAM Application Activity Model

— AIM Application Interpreted Model

— AEC Architecture, Engineering, and Construction

— AP Application Protocol

— ARM Application Reference Model

— BOM Bill of Material

— B-rep Boundary Representation

— CG Center of Gravity

— CPS Collective Protective System

— CSG Constructive Solid Geometry

— DIS Draft International Standard

— ESWBS Extended Ship Work Breakdown Structure

— GARM General Architecture Reference Model

— HVAC Heating, Ventilation, and Air Conditioning

— ICAM Integrated Computer-Aided Manufacturing

— $IDEF_0$ ICAM Definition Language 0

— IGES Initial Graphics Exchange Standard

— IPO IGES/PDES Organization

— ISO International Standards Organization

— NIAM Nijssen's Information Analysis Method

— NIDDESC Navy Industry Digital Data Exchange Standards Committee

— O & F Outfit and Furnishings

— PDES Product Data Exchange using Step

— STEP Standard for the Exchange of Product Model Data

— U oF Unit of Functionality

4. Information Requirements

This clause specifies the content and format of data describing HVAC systems and attached components/equipment to be exchanged between dissimilar product definition systems for use in a defined set of applications.

The information requirements are specified as a set of units of functionality, application objects and application assertions. These assertions pertain to individual application objects and to relationships between application objects. The information requirements are defined using the terminology of the subject area of this application protocol.

The information requirements correspond to those of the activities identified as being in scope of this application protocol in the Application Activity Model in annex E. A more complete and formal description of the reference model, in NIAM, is presented in annex F.

4.1 Units of Functionality

This subclause specifies the units of functionality for NSRP-0426. This Part specifies the following units of functionality:

— approvals_and_versions;

— bills_of_material;

— connectivity_check;

— equipment_arrangement;

— graphic_presentation;

— heating/cooling_load_analysis;

— hvac_duct_pressure_drop/sizing_analysis;

— hvac_fabrication_assembly_definition;

— hvac_installation/assembly_assembly_definition;

— hvac_test_definition;

— interference_analysis;

— support_engineering.

4.1.1 approvals_and_versions

The following application objects are used by the approvals_and_versions UoF:

— Approval_event;

— approval_item;

— approval_relationship;

— approval_relationship_event;

— approval_structure;

— current_version;

— item;

— item_base;

— version_history;

— version_relationship.

4.1.2 bills_of_material

The following application objects are used by the bills_or_material UoF:

- Engineering Part (all types)
  - HVAC System (containing)
  - Engineering Part Description
  - Engineering Part Specification
  - Engineering Part Material
  - Engineering Part Material Specification
  - Engineering Part Identifier
    - Engineering Part Organization Part Number
    - Engineering Part Number Organization ID
  - Engineering Part Weight (dry)
  - Engineering Part Weight (wet)
  - Engineering Part Maximum Allowable Weight-dry
  - Engineering Part Maximum Allowable Weight-wet
  - Engineering Part Manufacturer Name
  - Engineering Part Manufacturer Part Number
  - NAVSEA Drawing Number
  - Engineering Part Drawing Number Organization ID
  - Engineering Part Organization Drawing Number
  - Engineering Part Organization Drawing Find Number
  - Allowance Parts List (APL) Number
  - MIL-STD Number
  - Engineering Part Quantity
  - Engineering Part Specification
  - Functional Group Code
  - Engineering Part Service
  - Engineering Part Location Description
  - Engineering Part Required Shock Class
  - Engineering Part Damage Control Class
  - Distribution Parts - (additional data per part class)
    - HVAC Parts
      - HVAC Part Material Thickness/Gauge

HVAC Components
- HVAC Devices
  - HVAC Passive Air Filter
    - HVAC Filter Housing Number
    - HVAC Size (e.g. '15AF','24x24')
    - HVAC Filter Type(e.g.'cbr', 'flame_arrestor','HEPA')
    - Design Pressure Loss - Clean
    - Design Pressure Loss - Dirty
    - Filter Gauge Type (e.g. 'II')
    - Filter Gauge Maximum Pressure (in. WG)
    - Compartment(s) (served)
  - HVAC Flow Control Device (FCD)
    - HVAC FCD Type (e.g 'SCD' for smoke control damper)
    - HVAC Valve Number
    - HVAC FCD Type of Control (e.g.'remote')
    - Control Device - Actuator Engineering Part Location Description
    - HVAC FCD Size Description (e.g. '18 DIA')
    - Compartment(s) (served)
- HVAC Fittings
  - HVAC Fitting Type
  - HVAC Weather Opening
  - HVAC Takeoff
  - HVAC Turn/Elbow
  - HVAC Venturi Tube
  - HVAC Armor Grating
  - HVAC Transition
  - HVAC Terminal
  - HVAC Orifice
  - HVAC Screen
  - HVAC Flange

HVAC Duct (includes straight and minor offsets)

Devices

Equipment

Compartment(s) (served/heated)
- Compartment Design Temperature - Heating Season

HVAC Fan/Coil (*Fans, Fan Coil Assemblies, Unit Coolers, Duct Coils, and Gravity Coils*)
- HVAC Size (e.g. 'A2A4W6', '21')
- HVAC Type (e.g. 'DW')
- Control Device - Motor Controller (controlled by)
  - Engineering Part Location Description
  - Control Device - Master Switch (controlled by)
    - Engineering Part Location Description
- HVAC Fan (*Fans, Fan Coil Assemblies, Unit Coolers*)
  - Equipment HVAC Number (e.g. '05-148-1')
  - Equipment Rated Capacity (CFM)
  - Equipment Design Pressure (Total Pressure)
  - Equipment Operating Condition
    - Equipment Operating Condition Description (e.g. 'Design')
    - Equipment Flow Rate (CFM)
    - Air Flow Rate - Replenishment (CFM)
    - Air Flow Rate - Bypass (CFM)
- HVAC Coil (*Fan Coil Assemblies, Unit Coolers, Duct Coils,*

- *and Gravity Coils*)
- HVAC System (Recirc System)
  - HVAC System Number
- Equipment Operating Condition
  - AC Load (tons)
  - Design Cooling Medium Flow Rate (GPM)
- Equipment - Air Conditioning Plant (supplied by)
  - Air Conditioning Plant Number

HVAC Heater
- HVAC Heater Number
- HVAC Size (e.g. '26')
- HVAC Type (e.g. 'M')
- Control Parameter Name (e.g.'power', valve_position)
- Control Parameter Minimum Value
- Control Parameter Maximum Value
- HVAC Heater Required Capacity (BTU/Hr.)
- HVAC Heater Maximum Capacity (BTU/Hr.)
- Control Device - Thermostat
  - Control Device Type (e.g. "2PD")
  - Control Parameter Name ('temp')
  - Control Parameter Set Point (e.g.°F)
- Duct Heater
  - HVAC System
    - HVAC System Number
  - Duct Heater Use (e.g. 'RE'heat, 'PRE'heat)
  - Humidistat Requirement (Yes/No)
  - Equipment Operating Condition (seasonal condition)
    - Equipment Operating Condition Description (i.e. 'COOL' or 'HEAT')
    - Equipment Flow Rate (CFM)

  - Duct Heater - Electric
    - Power Output Required
    - Equipment Output Power (actual)
  - Duct Heater - Steam
    - Design Heating Medium Flow Rate (Lbs/Hr.)
    - Control Device - Control Valve
      - Control Device Type
- Unit Heater
  - Design Heating Medium Flow Rate (Lbs/Hr.)
  - Control Device - Control Valve
    - Control Device Type
- Electrical Space Heater
  - Power Output Required
  - Equipment Output Power (actual)

HVAC Active Filter
- HVAC Filter Type (e.g. 'ESP','renewable_media')
- ESP (Electrostatic Precipitator) Size(e.g.'16')
- ESP (Electrostatic Precipitator) Number
- ESP (Electrostatic Precipitator) Required Power
- Design Pressure Loss - Clean
- Design Pressure Loss - Dirty

Instrument
- Instrument Nameplate Inscription
- Instrument Type
- Instrument Measured Parameter
- Instrument Value Units
- Instrument Dial Size

Instrument Range Low Value
Instrument Range High Value
Instrument Red Hand/Alarm Setting

4.1.3 connectivity check

The following application objects are used by the connectivity_check UoF:

- Distribution End
  - HVAC Port
    - HVAC Port Equivalent Diameter
    - HVAC Port Type
    - HVAC Port Cross Section
      - HVAC Port Cross Section Type
      - HVAC Port Cross Section Width
      - HVAC Port Cross Section Height
      - HVAC Port Cross Section Corner Radius
  - Distribution End Location
  - Distribution End Orientation
  - Distribution End Connection Status (Free/Joined)
- HVAC Interface
- HVAC Joint
  - HVAC Joint Type

4.1.4 equipment_arrangement

The following application objects are used by the equipment_arrangement UoF:

- Equipment
  - Equipment Name
  - Manufacturer Drawing Number
  - Equipment Source
  - Equipment System Conformance Specification
  - Equipment Applicable Specifications (possibly more than one)
    - Specification ID
  - Equipment Shock Qualification Status
  - Equipment Interchangeability
  - Engineering Part Location Description
  - Equipment Input Power At Rated Condition
  - Equipment Output Power
  - Equipment Pressure Rating
  - Equipment Rated Temperature
  - Equipment Rated Capacity
  - Equipment Design Temperature
  - Equipment Design Pressure
  - Equipment Operating Condition
    - System Operating Condition
      - Equipment CFM to air (if fan cooled)
      - Equipment GPM of cooling medium
    - Equipment Medium Flow Rate
    - Equipment Heat Dissipation to air
    - Equipment Heat Dissipation to FW
    - Equipment Heat Dissipation to SW
    - Equipment Vibration Frequency

- Equipment Vibration Amplitude
- Equipment Insulation Type
- Equipment Insulation Thickness
- Equipment Required Tests
  - Test ID
- Equipment Installation Instructions
  - Installation Instruction ID
- Equipment Safety Consideration Description
- Equipment Foundation Finish
- Equipment Alignment Flatness Tolerance
- Equipment Alignment Angularity Tolerance
- Equipment Mounting Data
  - Equipment Fixed Mount Data
    - Equipment Fixed Mount Type
    - Equipment Mounting Surface Thickness
  - Equipment Resilient Mount Data
    - Equipment Resilient Mount Specification
    - Equipment Inertia
    - Equipment Product of Inertia
    - Shock Movement Data
      - Equipment Shock Movement Direction
      - Equipment Shock Movement Magnitude

Compartment
- Zone ID (of owner zone)
- Compartment ID
- Compartment Name
- Compartment Location
- Compartment Orientation

Engineering Part
- Engineering Part Shape Representation
- Part Envelope Occurrence Shape Representation
  - Part Envelope Relative Location
  - Part Envelope Type
  - (i.e. Access/Maintenance Envelope, Shock Envelope, Insulation Envelope)

4.1.5 graphic_presentation

The following application objects are used by the graphic presentation UoF:

Engineering Part
- Engineering Part Shape Representation
- Part Envelope Occurrence Shape Representation
  - Part Envelope Type
  - (i.e. Access/Maintenance Envelope, Shock Envelope, Insulation Envelope)

4.1.6 heating/cooling_load_analysis

The following application objects are used by the heating/cooling_load_analysis UoF:

Compartment
- Compartment Number (e.g. "03-635-0-C")
- Compartment Name (e.g. "Vertrep Control Station")
- Compartment CPS Zone
- Compartment Heater ID
- Compartment Light Level
- Compartment Space Type (e.g. "4")

- Compartment Number of Personnel
- Compartment Limiting Temperature
- Compartment Rate of Change
- Compartment Design Temperature - Cooling Season
- Compartment Design Temperature - Heating Season
- Compartment Design Relative Humidity - Low Value
- Compartment Design Relative Humidity - High Value
- Compartment Additional Replenishment Air Requirement

- Compartment Boundary
  - Compartment Boundary Insulation Type
  - Compartment Boundary Height
  - Compartment Boundary Width
  - Compartment Boundary Side Indicator
- Compartment Space Treatment
  - Compartment Space Treatment Type
  - Compartment Supply Type
  - Compartment Exhaust/Return Type
  - System Damage Control Class
  - Closure Damage Control Class
- Compartment Interface
  - Compartment Boundary ID
  - Exterior Boundary
    - Exterior Boundary Name
    - Exterior Boundary HVAC Load Type (i.e. "outside_air" or "solar")
- Equipment (in Compartment)
  - Equipment Operating Condition
    - Equipment Heat Dissipation To Air

HVAC System
- HVAC System Number
- HVAC System Coil Type

Heating/Cooling Load Analysis Case
- HC Cooling Temperature
- HC Heating Temperature
- HC Cooling Load
- HC Heating Load

Collective Protection System Zone
- CPS Zone Name
- CPS Zone Protection Level (i.e. "TP" = total; "OTP" = optional total; "LP" = limited")

4.1.7 hvac_duct_pressure_drop/sizing_analysis

The following application objects are used by the hvaac_duct_pressure_drop/sizing_analysis UoF:

HVAC System
- HVAC System Number
- HVAC System Function (i.e. 'S'upply, 'E'xhaust, 'R'ecirc)
- Fan
  - Equipment Rated Capacity (Flow Rate in CFM)
  - Fan Number (e.g. '05-148-1')
  - Fan Size (e.g. 'A2A4W6')
  - Fan Total Pressure
- HVAC Section
  - HVAC Section Flow Rate (CFM)
  - HVAC Section Pressure Loss
  - HVAC Section Function ('S'upply, 'E'xhaust)

HVAC Port
- HVAC Port Section Node Name
- Available System/Section Pressure
- HVAC Port Equivalent Diameter
- HVAC Cross Section
  - HVAC Port Cross Section Corner Radius
- Compartment (in which supply/exhaust port occurs)
  - Compartment Number
  - Compartment Name
  - Compartment Required Air Flow

HVAC Part
- Velocity
- Velocity Pressure
- Pressure Loss/Foot
- Pressure Loss/Gain

- HVAC Duct
  - Length
  - Pressure Loss Per Unit Length
  - Maximum Velocity
  - Minimum Velocity
- HVAC Component
  - Pressure Loss Coefficient ("K")
    - -or-
  - Fixed Pressure Loss/Gain

  - HVAC Fitting
    - HVAC Turn/Elbow
      - HVAC Turn/Elbow Type
      - HVAC Turn/Elbow Radius Ratio
      - HVAC Turn/Elbow Aspect Ratio
      - HVAC Turn/Elbow Type
      - HVAC Turn/Elbow No. Of Splitters/Vanes
      - HVAC Turn/Elbow Splitter Radius
      - HVAC Turn/Elbow Radius
      - HVAC Turn/Elbow Angle
      - HVAC Multiple Elbow-Direction Change
      - HVAC Multiple Elbow-Same Direction

Equipment
- Equipment Fixed Pressure Loss/Gain

4.1.8 hvac_fabrication_assembly_definition

The following application objects are used by the hvac_fabrication_assembly_definition UoF:

HVAC System
- HVAC System Specification

HVAC Joints
- Joint Type
- Joining Specification
- Fastener Set
  - HVAC Fastener Type
  - Engineering Part Material Specification
  - Fastener Quantity Required

HVAC Fabrication Assembly
- Assembly Name
- Assembly End Ports (extents of assembly)

Assembly Internal Interface Ports
Assembly Weight
Assembly Center Of Gravity
HVAC Fabrication Part
Engineering Part Shape Representation
Engineering Part Location
Engineering Part Orientation
Engineering Part Material
Engineering Part Material Specification
HVAC Standard Shape Macro ID
HVAC Standard Shape Macro Parameter Name
HVAC Standard Shape Macro Parameter Value
-or-
HVAC Fabrication Piece
HVAC Fabrication Piece ID
HVAC Fabrication Piece Cutting Geometry
HVAC Fabrication Piece Hole Punch Layout/Geometry
HVAC Fabrication Piece Bend/Break Line Layout/Geometry

4.1.9 hvac_installation/assembly_assembly-definition

The following application objects are used by hvac_installation/assembly_assembly_definition UoF:

HVAC Assembly
Assembly Name
Assembly Type
Assembly End Ports (extents of assembly)
Assembly Assembly Instructions
Assembly Installation Instructions
Assembly Coating Instructions
Assembly Insulation Instructions
Assembly Weight
Assembly Center Of Gravity
Engineering Part
Engineering Part Name
Engineering Part Material
Engineering Part Material Specification
Engineering Part Originating Organization Part Number
Engineering Part Weight
Engineering Part Center Of Gravity

Insulation Parts
Material
Total Part Insulation Thickness
HVAC Joints
Joint Type
Joining Specification
Fastener Set
HVAC Fastener Type
Engineering Part Material Specification
Fastener Quantity Required

4.1.10 hvac_test_definition

The following application objects are used by the hvac_test_definition UoF:

HVAC System
- HVAC System Number (e.g. "S02-202-1", "R05-182-3")

HVAC Test
- HVAC Test Memo Title
- HVAC Test Memo Number
- HVAC Test Memo Revision

- HVAC Test Element
  - Engineering Part (part being tested)

Engineering Part
- Engineering Part Name
- Engineering Part Location Name

- Control Device
  - Control Device with which interlocked
  - Set Points

  - Instrument (To Be Used)
  - Compartment
    - Compartment Number
    - Compartment Name
    - COmpartment Required Air Flow

HVAC Port
- HVAC Port/Compartment Occurrence
  - HVAC Port Location Description
  - HVAC Port Required Air Flow

  - Collective Protection System Zone
    - CPS Zone Name
    - CPS Zone Protection Level
      - Compartment
        - Compartment Number
        - Compartment Name
        - Compartment CPS Zone
        - Compartment Required Air Pressure

        - HVAC System (serving compartment)
          - HVAC System Number

  - HVAC Part
    - HVAC Component
      - HVAC Device
        - HVAC Flow Control Device (FCD)
          - HVAC FCD Type
            - (i.e.'WTC' for watertight closure)
          - Engineering Part Name
          - Engineering Part Location Name
          - Control Device (controller of)
            - Engineering Part Name
            - Engineering Part Location Name
            - Control Device (with which interlocked)

  - Compartment
    - Compartment Number
    - Compartment Name
    - Compartment Acceptable Noise Level
      - HVAC System (serving compartment)
        - HVAC System Number

Equipment
Air Conditioning Plant
Air Conditioning Plant Number

Equipment
HVAC System (containing Equipment - coil below)
Engineering Part Name
Engineering Part Location Name

Fan Coil Assembly
Unit Cooler
Gravity Coil
Duct Coil
Other Heat Exchangers (e.g. oil coolers)

Compartment
Compartment Number
Compartment Name
HVAC System (serving compartment)
Compartment Design Temperature - Cooling Season
Compartment Design Temperature - Heating Season
Compartment Design Relative Humidity - Low Value
Compartment Design Relative Humidity - High Value

4.1.11 interference_analysis

The following application objects are used by the interference_analysis UoF:

Engineering Part
Engineering Part Shape Representation
Engineering Part Location
Engineering Part Orientation
Part Envelope Occurrence Shape Representation
Part Envelope Type
(i.e. Access/Maintenance Envelope, Shock Envelope, Insulation Envelope)
HVAC Port
HVAC Joint
HVAC Joint Type

4.1.12 support engineering

The following application objects are used by the support engineering UoF:

Engineering Part
Functional Identifier (FGC, etc.)
Allowance Parts List Number (APL)
Manufacturer Name
Manufacturer Part Number
Manufacturer Drawing Number
NAVSEA Drawing Number
MIL-STD Number
Federal Stock Number
Maintenance Worthy Flag
Engineering System

Functional Identifier (ESWBS, etc.)
NAVSEA Drawing Number

4.2 Application Objects

This subclause specifies the application objects for the HVAC application protocol. Each application object is an atomic element embodying a unique application concept and containing attributes specifying the data elements of the object. The application objects and their definitions are given below.

4.2.1 ac_power_characteristic: a subtype of power_characteristic defining the properties of electrical voltage, frequency, and number of phases associated with an electrical power value.

4.2.2 access_cover_occurrence: a type of hvac_component_occurrence closing an access_open-ing.

4.2.3 access_opening: a hole in an hvac_part_occurrence providing maintenance access.

4.2.4 access_opening_location: the geometric location of an access_opening relative to the part where it occurs.

4.2.5 access_opening_orientation: the geometric orientation of an access_opening relative to the part where it occurs.

4.2.6 access_opening_shape dimension: a linear dimensional attribute defining one of three such attributes defining the dimensions of one of the standard access opening shapes (circle, flat oval, rectangle, triangle).

4.2.7 access_opening_shape_representation: links the actual geometry of an access_open-ing and defines the transformation mapping this geometry to the coordinate system of the part where the access_opening occurs.

4.2.8 actuator_occurrence: a type of control_device_occurrence causing a mechanical action to occur in response to a condition_signal.

4.2.9 airborne_noise_hvac_test_element: a type of hvac_test_element to test noise levels in one or more referenced compartment_occurrences generated by the hvac systems/equipment serving these compartment_occurrences.

4.2.10 air_conditioning_load_hvac_test_element: a type of hvac_test_element to verify that its referenced air_conditioning_plant_unit_occurrence(s) adequately supply the cooling loads of its(their) attached hvac_fan/coil_occurrence(s).

4.2.11 assembly_assembly_instruction: a type of assembly_instruction for an hvac_as-sembly_occurrence describing a work operation to be performed in its assembly.

4.2.12 assembly_coating_instruction: a type of assembly_instruction for an hvac_assembly_occurrence describing a coating operation to be performed on the assembly.

4.2.13 assembly_installation_instruction: a type of assembly_instruction for an hvac_assembly_occurrence describing a work operation to be performed in its installation.

4.2.14 assembly_insulation_instruction: a type of assembly_instruction for an hvac_assembly_occurrence describing an insulation operation to be performed on the assembly.

4.2.15 assembly_instruction: an entity associated with one hvac_assembly_occurrence defining the type (i.e. “assembly”, “coating”, “installation”, “insulation”), number and description (text) of a work instruction used in its production.

4.2.16 assembly_occurrence: a physical assembly of engineering_part_occurrences.

4.2.17 assembly_end_port: a distribution_end_occurrence of an engineering_part_occurrence contained in an hvac_assembly_occurrence serving as an interfacing boundary of that assembly.

4.2.18 attached/penetrating_object: one of a set of entity types attached in an attachment_occurrence.

4.2.19 attached/penetrated object: one of a set of entity types “attaching” in an attachment_oc-currence.

4.2.20 attaching_part_occurrence: a type of discrete_part_occurrence attaching either to an engineering_part_occurrence or to a distribution_interconnection_ocurrence (such as an hvac section) to support, restrain, operate or insulate that part or interconnection.

4.2.21 attachment_configuration: defines the function and geometric configuration of an attachment_occurrence.

4.2.22 attachment_end_occurrence: the aspect of an object involved with that object’s attachment to another object. An attachment_end_occurrence may (e.g. the end of an hvac hanger) or may not (e.g. the “end” of a duct covered by insulation) be related to a physical aspect of an object. An attachment_end_occurrence is a logical association between an object involved in an attachment_occurrence and that attachment_occurrence.

4.2.23 attachment occurrence: a type of interface_spiv_occurrence defining a physical attachment between two objects, one in the set attached/penetrating_object and one in the set attaching/penetrated_object.

4.2.24 attachment_positional_dependency: represents a directed relationship between one attachment_occurrence whose position is the basis for that of a second attachment_occurrence. The first is said to be independent; the second is dependent on the first for its position.

4.2.25 compartment_boundary: a type of space_end_occurrence logically defining one side of the enclosed space of a compartment_occurrence.

4.2.26 compartment_condition: represents the ambient conditions of temperature and relative humidity inside a compartment_occurrence.

4.2.27 compartment_exterior_boundary: a type of compartment_boundary whose opposite side is on the outside of the ship.

4.2.28 compartment_interface: a logical connection between two compartment_boundary entities facilitating the definition of adjacency conditions between compartment occurrences.

4.2.29 compartment_occurrence: represents a ship compartment; a type of space_ship_product_item_version.

4.2.30 condition_signal: a piece of information produced by an instrument_occurrence and sent to a controller defining the value of a measured parameter or the presence of a sensed condition.

4.2.31 control_device_occurrence: a type of device_occurrence providing a control function.

4.2.32 control_parameter: a named parameter (e.g. ‘temperature’) either measured or set in a controlled system.

4.2.33 controlled_object: represents an engineering_part_occurrence or a compartment_occurrence or a zone_occurrence with one or more control_parameters controlled. Examples include a compartment‘‘s temperature or a fan motor’s state (on/off).

4.2.34 controller: provides a control function in response to an input condition_signal.

4.2.25 collective_protection_system_zone_occurrence: a type of zone_occurrence maintained at a positive pressure by specially designed systems to protect against chemical, bacteriological or radiation contamination.

4.2.26 dc_power_characteristic: a subtype of power_characteristic defining the electrical voltage associated with direct current electrical power.

4.2.27 detected_control_parameter: a type of control_parameter measured/detected by one or more instrument_occurrences.

4.2.28 device_occurrence: a type of engineering_part_occurrence, including non-distribution parts such as equipment, instruments, and control devices.

4.2.29 discrete_part_occurrence: a type of non-distribution engineering_part_occurrence, including attaching_part_occurrences.

4.2.30 distribution_end_location: a datum locating a distribution_end_occurrence defined in the same coordinate system as its owning object.

4.2.31 distribution_end_occurrence: an opening on an engineering_part_occurrence or a distribution_interconnection_occurrence with a distribution medium passing through it and to which other such ends may connect.

4.2.32 distribution_end_orientation: a direction indicating the normal to the plane of a distribution_end_occurrence defined in the same coordinate system as the object owning the end.

4.2.33 distribution_end_relative_location: a datum locating a specific_distribution_end of a specific_engineering_part relative to the coordinate system of that part.

4.2.34 distribution_end_relative_orientation: a direction indicating the normal to the plane of a specific_distribution_end of a specific_engineering_part relative to the coordinate system of that part.

4.2.35 distribution_interconnection_occurrence: a type of interface_spiv_occurrence identifying various types of linkages between bounding distribution_end_occurrences.

4.2.36 distribution_interface_occurrence: a type of interface_spiv_occurrence identifying a connection between adjacent distribution_end_occurrences.

4.2.37 distribution_part_occurence: a type of engineering_system_occurrence that distributes a distribution medium.

4.2.38 distribution_system_occurrence: a type of engineering_system_occurrence that distributes a medium and consists of a collection of connected engineering_part_occurrences and distribution_interconnection_occurrences.

4.2.39 duct_coil_occurrence: a type of cooling coil fitted in line in a section of hvac duct.

4.2.40 duct_heater_occurrence: a type of hvac heater fitted in line in a section of hvac duct.

4.2.41 duct_seam: a longitudinal joint in a fabricated length of ducting.

4.2.42 electrical_duct_heater_occurrence: a type of duct_heater_occurrence producing heat by applying electrical power to electrical heating elements.

4.2.43 electrical_space_heater_occurrence: a free-standing hvac_heater_occurrence.

4.2.44 end_ship_product_item: a type of ship_product_item representing a topological end of a product_ship_product_item, space_ship_product_item or interface_spi.

4.2.45 end_ship_product_item_version: a type of ship_product_item_version for an end_ship_product_item.

4.2.46 end_ship_product_item_version_occurrence:

4.2.47 engineering_part_center_of_gravity: the coordintes of the CG of a specific_engineering_part relative to the part's local coordinate system.

4.2.48 engineering_part_identifier: consists of the concatenation of engineering_part_number_organization_id and engineering_part_organization_part_number used to refer to an engineering_part_occurrence.

4.2.49 engineering_part_occurrence: a type of product_spiv_occurrence.

4.2.50 engineering_part_occurrence_design:

4.2.51 engineering_part_occurrence_implementation:

4.2.52 engineering_part_orientation: the orientation of an engineering_part_occurrence in model space.

4.2.53 engineering_system_occurrence: a type of product_spiv_occurrence

4.2.54 envelope_occurrence a type of space_spiv_occurrence representing non-compartment volumes such as the volumes associated with the removal route of a piece of equipment.

4.2.55 equipment_applicable_specification: those specifications associated with an equipment_occurrence applicable to it in the sense that they define operating environment or other related requirements suited to the equipment_occurrence. These specifications are distinct from the equipment_occurrence's system conformance specification identifying the specification directly governing its fit, form and function.

4.2.56 equipment_fixed_mounting_data: a type of equipment_mounting_data defining the parameters associated with an equipment_occurrence's rigid mounting.

4.2.57 equipment_interchangeability: identifies, via a description, one of several alternate pieces of equipment which can be interchanged with the associated specific_equipment.

4.2.58 equipment_installation_instruction: represents the identifier of a text instruction describing some aspect of the job of installing an equipment_occurrence.

4.2.59 equipment_mounting_date: the entity associated with an equipment_occurrence describing its required (fixed or resilient) mounting parameters.

4.2.60 equipment_occurrence: a type of engineering_part_occurrence. Equipment_occurrences are typically larger and/or more complex than other types of engineering_part_occurrences.

4.2.61 equipment_occurrence_design:

4.2.62 equipment_occurrence_implementation:

4.2.63 equipment_operating_condition: defines a set of operating parameter values for an equipment_occurrence which may or may not be associated with a system_operating_condition.

4.2.64 equipment_required_test: defines a test that must be carried out on an equipment_occurrence.

4.2.65 equipment_resilient_mount_data: a type of equipment_mounting_data defining the movement parameters to mount an equipment_occurrence resiliently.

4.2.66 equipment_removal_route_instruction: identifies an instruction regarding the route to be used in removing a piece of equipment from the ship.

4.2.67 equipment_shock_movement_direction: defines direction, magnitude, inertia and product of inertia of a resiliently mounted equipment_occurrence that moves due to shock loading.

4.2.68 equipment_system_operating_condition: the intersection entity of an equipment_operating_condition and a system_operating_condition permitting a many-to-many relationship between these two entities.

4.2.69 fan_occurrence: a type of hvac_fan_occurrence consisting of a fan only, typically used to supply air to, or exhaust air from, a ventilated space.

4.2.70 fastener_quantity: the number of a type of specific_fastener required in a specific_fastener_set.

4.2.71 fastener_set_occurrence: a specific_fastener_set used by an interface_spiv_occurrence (i.e. a joint or non-joint attachment).

4.2.72 fastener_usage: the combination of a specific_fastener and its fastener_quantity in a specific_fastener_set.

4.2.73 fire_zone_occurrence: a type of zone_occurrence defining a region with fire-confining boundaries.

4.2.74 gravity_coil_occurrence: a type of hvac_coil_occurrence whose working fluid is fed by gravity.

4.2.75 heating/cooling_load_analysis_case: collects a series of hvac_system_load_occurrences for analysis as a group.

4.2.76 humidistat_occurrence: a type of control_device_occurrence whose function is both the measurement of humidity and the control of heater/coil equipment to control that humidity.

4.2.77 hvac_active_filter_occurrence: a type of electro-mechanical hvac_device_occurrence that filters air. An electrostatic precipitator is a type of hvac active filter.

4.2.78 hvac_assembly_occurrence: a type of assembly_occurrence comprised of hvac_fabrication_parts.

4.2.79 hvac_coil_occurrence: a type of hvac_fan/coil_occurrence relating, via equipment_operating_condition, its cooling-related requirements to the hvac_fan/coil_occurrence.

4.2.80 hvac_component_occurrence: a type of hvac_part_occurrence with subtypes of hvac_fitting_occurrence, hvac_device_occurrence, and access_cover_occurrence. This class of hvac_part_occurrence is characterized by component parts with fixed occurrence geometry defined at the specific level of definition, unlike hvac_duct_occurrences with occurrence geometry defined only at the occurrence level.

4.2.81 hvac_device_occurrence: a type of hvac_component_occurrence performing a function other than just the distribution of air. Examples include filters and dampers.

4.2.82 hvac_duct_occurrence: a type of hvac_part_occurrence defining a length of ducting. The geometry of an hvac_duct_occurrence is defined at the occurrence level. It may have a round, rounded rectangle, flat oval or rectangular cross section.

4.2.83 hvac_duct_occurrence_design:

4.2.84 hvac_duct_occurrence_implementation:

4.2.85 hvac_equipment/load_occurrence: a cross index entity among all hvac_equipment_occurrences and all hvac_load_items.

4.2.86 hvac_equipment_occurrence: the class of equipment_occurrence comprised of equipment with a direct hvac function. These equipment types include hvac_fan/coil_occurrence, hvac_heater_occurrence and hvac_active_filter_occurrence.

4.2.87 hvac_fabrication_part: a type of hvac_duct_occurrence or hvac_fitting_occurrence for which fabrication data has been or will be developed. For example, a rectangular elbow is a type of hvac_fitting_occurrence typically fabricated by the shipbuilder or a subcontractor and thus requiring the development of fabrications data. However, not all members of the classes hvac_duct_occurrence and hvac_fitting_occurrence are treated as fabrication parts. For example, most spiral duct fittings are purchased as standard components. Spiral duct may also be purchased in standard lengths.

4.2.88 hvac_fabrication_part_bend/break line_layout_geometry: a set of geometry associated with an hvac_fabrication_piece defining the locations and angles of lines along which the piece is to be bent.

4.2.89 hvac_fabrication_part_cutting_geometry: a set of geometry associated with an hvac_fabrication_piece defining the geometry of the cutting contours of the piece.

4.2.90 hvac_fabrication_part_end: a type of hvac_port_occurrence delimiting the ends of an hvac_fabrication_part.

4.2.91 hvac_fabrication_part_explicit_geometry_part: a type of hvac_fabrication_part with fabrication geometry explicitly provided (bending, layout and cutting geometry) with the part.

4.2.92 hvac_fabrication_part_hole_punch_layout_geometry: a set of geometry associated with an hvac_fabrication_piece defining the size and layout of holes to be punched in the piece.

4.2.93 hvac_fabrication_part_standard_shape_macro_parameter: the combination of a shape macro parameter name and its value to be used as input to a standard shape macro to produce the fabrication geometry of the hvac_fabrication_part_standard_shape_macro_part with which it is associated.

4.2.94 hvac_fabrication_part_standard_shape_macro_part: a type of hvac_fabrication_part with fabrication geometry defined via the execution of a standard shape macro rather than explicitly.

4.2.95 hvac_fabrication_piece: an individual fabricated piece. Several may make up a complete hvac_fabrication_part.

4.2.96 hvac_fan/coil_occurrence: a type of hvac_equipment_occurrence which may contain a fan, a coil or both.

4.2.97 hvac_fan_occurrence: a type of hvac_fan/coil_occurrence containing a fan.

4.2.98 hvac_fan/coil_assembly_occurrence: a type of both hvac_fan_occurrence and hvac_coil_occurrence. Contains both a fan and a cooling coil in an integrated assembly.

4.2.99 hvac_fitting_occurrence: a type of hvac_component_occurrence occuring in-line in an hvac_system_occurrence and providing no active function in that system. Examples include takeoffs, turns/elbows, terminals, transitions, flanges, etc.

4.2.100 hvac_flow_control_device_occurrence; a type of hvac_device_occurrence which, when activated, modifies the flow of air through an hvac_system_occurrence. Examples include dampers, watertight closures and valves.

4.2.101 hvac_flow_control_device_operating_condition: a cross index entity defining the relationship between an hvac_flow_control_device_occurrence and a system_operating_condtion to define the required closure condition of the device for the given operating condition.

4.2.102 hvac_heater_occurrence: a type of hvac_equipment_occurrence to heat air.

4.2.103 hvac_interconnection_interface_occurrence: defines a logical connection between two hvac_interconnection_occurrences such as two hvac sections. Primarily of interest during functional or diagrammatic design to model the network connectivity of an hvac_system_occurrence before detailed design has identified the hvac_part_occurrences in the system.

4.2.104 hvac_interconnection_occurrence: a type of distribution_interconnection_occurrence. HVAC_interconnection_occurrences are identified implicitly during functional design on a diagram typically as a single line between hvac equipment items and terminal points. The only type of hvac_interconnection_occurrence is an hvac_section_occurrence.

4.2.105 hvac_interface_occurrence: a type of distribution_interface_occurrence logically connecting two or more hvac_port_occurrences.

4.2.106 hvac_joint_joining_type: defines the technique used to make an hvac_joint_occurrence from the enumeration “weld”, “solder”, “lapped_rivet”, “sheet_metal_screw”, “flange”, and “cleat”.

4.2.107 hvac_joint_sealant_type: defines the sealant technique type used to make an hvac_joint_occurrence from the enumeration “thermal_fit_band”, “duct_sealant”, and “none”.

4.2.108 hvac_joint_tightness: defines the “tightness” of an hvac_joint_occurrence based on the joints hvac_joint_joining_type and, in the case of non-weld or solder joints, hvac_joint_sealant_type. The resultant tightness may be “air_tight”, “water_tight”, “non-water_tight”, or “drip_tight”.

4.2.109 hvac_joint_occurrence: a type of hvac_interface_occurrence identifing a physical joint occurring at the connection of two or more hvac_port_occurrences.

4.2.110 hvac_joint_occurrence_design:

4.2.111 hvac_joint_occurrence_implementation:

4.2.112 hvac_load_item: an instance of either a compartment_occurrence or an equipment_occurrence. Allows both these types to participate as loads presented to an hvac system. An equipment item becomes an hvac load when it is ventilated by an exhaust duct directly, as is the case with some high heat electronic devices.

4.2.113 hvac_part_occurrence: the highest level type of distribution_part_occurrence specifically used in an hvac_system_occurrence.

4.2.114 hvac_part_occurrence_design:

4.2.115 hvac_part_occurrence_implementation:

4.2.116 hvac_passive_filter_occurrence: a type of hvac_device_occurrence to filter air. A “passive” filter does not employ any active process to filter. A passive filter typically consists only of a replaceable filter element in a filter housing.

4.2.117 hvac_port/load_occurrence: defines the relationship between hvac_port_occurrences and hvac_load_items. Of particular value in defining and performing system performance and balance tests where, for a given system, all port air flow rates for each served compartment (a type of hvac_load_item) must be measured.

4.2.118 hvac_port_cross_section: defines the cross section shape or geometry of one or more related hvac_port_occurrences.

4.2.119 hvac_port_occurrence: a type of distribution_end_occurrence through which air flows and to which another hvac_port_occurrence may be connected via an hvac_interface_occurrence. An hvac_port_occurrence can (simultaneously) be associated with an hvac_part_occurrence, an hvac_interconnection_occurrence and/or an hvac_system_occurrence.

4.2.120 hvac_port_occurrence_design:

4.2.121 hvac_port_occurrence_implementation:

4.2.122 hvac_port_state: defines the flow conditions at an hvac_port_occurrence for a particular system_operating_condition.

4.2.123 hvac_section_occurrence: a type of hvac_interconnection_occurrence with constant flow properties throughout its extent for a given system_operating_condition of the hvac_system_occurrence of which it is a member.

4.2.124 hvac_section_occurrence_design:

4.2.125 hvac_section_occurrence_implementation: -

4.2.126 hvac_section_state: an entity relating the flow conditions in an hvac_section_occurrence for a given system_operating_condition.

4.2.127 hvac_small_offset_duct: a class of hvac_duct_occurrence describing a duct which, while not straight, is sufficiently linear to be treated as straight for pressure loss purposes.

4.2.127 hvac_straight_duct: a class of hvac_duct_occurrence with no change in direction.

4.2.128 hvac_support: a type of attaching_part_occurrence supporting the part to which it is attached.

4.2.129 hvac_system/load_occurrence: a cross index entity defining the relationship between hvac_system_occurrences serving hvac_load_items.

4.2.130 hvac_system_occurrence: a type of distribution_system_occurrence comprised of hvac_section_occurrences and/or hvac_part_occurrences and device occurrences supplying potentially conditioned air to, or exhaust air from, compartments or equipment.

4.2.131 hvac_system_occurrence_design:

4.2.132 hvac_system_occurrence_implementation:

4.2.133 hvac_test: relates a set of test descriptive attributes to the set of hvac_test_elements comprising a particular test.

4.2.134 hvac_test_element: one step or procedure in an overall hvac_test.

4.2.135 hvac_turn/elbow_occurrence: a type of hvac_fitting_occurrence causing a change in direction in the flow of air.

4.2.136 indicator_alarm: a type of instrument_occurrence_implementation producing a visible or audible indication of the presence of a condition_signal, e.g. a TP zone low differential pressure alarm.

4.2.137 instrument_occurrence: a type of engineering_part_occurrence measuring one or more parameters of a controlled_object.

4.2.138 instrument_occurrence_design:

4.2.139 instrument_occurrence_implementation:

4.2.140 insulation_envelope_occurrence: a type of part_envelope_occurrence defining the volume allowance around an object required by that object's insulation.

4.2.141 insulation_part_occurrence:

4.2.142 insulation_association_occurrence:

4.2.143 interface_spi: a high level object type defining a logical association between two end_ship_product_items.

4.2.144 interface_spiv: a version of an interface_spi.

4.2.145 interface_spiv_occurrence: an occurrence-type of interface_spiv. Examples of this type include a particular hvac joint or a particular interconnection between two hvac sections.

4.2.146 interlock: a cross index entity defining the dependency relationship between one parameter_control triggering, when set, a second parameter_control. Supports the testing of the control aspects of an hvac_system_occurrence.

4.2.147 lineal_attachment_configuration: references a linear geometry entity to model an attachment_configuration.

4.2.148 medium_flow: associates a medium and its flow rate with a specific_equipment.

4.2.149 medium_loss: defines a fixed pressure loss or coefficient for a given medium_flow through a specific_equipment.

4.2.150 motor_controller_occurrence: a type of control_device_occurrence consisting of a motor and actuator to control the operation principally of valves and closures.

4.2.151 non_standard_cross_section: a type of hvac_port_cross_section with a special geometry not representable as a rectangular, round, flat-oval or radiused corner shape.

4.2.152 parameter_measurement_instrument: a cross index entity relating the set of directed_control_parameters with the set of instrument_occurrence detecting those parameters. A given parameter_measurement_instrument relates one detected_control_parameter and one instrument_occurrence uniquely.

4.2.153 parameter_control: a cross index entity relating one controller and one set_control_parameter controlled by that controller uniquely.

4.2.154 part_envelope_occurrence_shape_representation: represents a volume surrounding an engineering_part_occurrence with a specific type/meaning such as “shock envelope”.

4.2.155 path_arc: refers either to a line segment or circular arc used to define the centerline geometry of distribution parts and interconnections. Path_arcs and their associated path_nodes form a geometric representation of an interconnected distribution network.

4.2.156 path_arc_center: the coordinates of the center of a circular arc path_arc in model space.

4.2.157 path_arc_radius: the radius length of a circular path_arc.

4.2.158 path_node: defines the end of a path_arc and provides a location for that end.

4.2.159 path_node_location: defines the location in model space of a path_node when that location is not given via the path_node’s relationship with a distribution_end_occurrence. This facility permits the definition and location of path_nodes that do not correspond to a distribution_end_occurrence.

4.2.160 path_split: defines a junction located at a path_node associating two or more other, possibly offset, path_nodes branching from the locating node. A path_split locates where one distribution path splits into two or more.

4.2.161 penetration_part: a type of attaching_part_occurrence typically fitted in a hole in a structural or joiner bulkhead to provide reinforcing to this hole through which a distribution_path_occurrence or a distribution_interconnection_occurrence passes.

4.2.162 power: defines a power value and the power characteristics associated with it.

4.2.163 power_characteristic: defines the type (e.g. mechanical) and properties of the power entity to which it is related.

4.2.164 pressure_zone_integrity_hvac_test_element: a type of hvac_test _element defining one step of an hvac_test to validate that the required pressure in a cps or other pressurized zone is obtained in each compartment of that zone.

4.2.165 product_ship_product_item: a type of ship_product_item representing an engineering system, engineering part or assembly.

4.2.166 product_ship_product_item_version: a type of ship_product_item_version - a version of a product_ship_product_item.

4.2.167 removal_route_envelope_occurrence:

4.2.168 set_control_parameter: A type of control_parameter initiating an action by the controlled_object with which it is associated. For example, a fan coil assembly (a type of engineering_part_occurrence) could have a “power on” set_control_parameter.

4.2.169 ship_product_item: the highest level of abstraction product representation entity defined in this application protocol.

4.2.170 ship_product_item_version: a version of a ship_product_item.

4.2.171 space_ship_product_item: a type of ship_product_item representing a volumetric entity such as a compartment or zone.

4.2.172 space_ship_product_item_version: a version of a space_ship_product_item.

4.2.173 specific_access_cover: a type of specific_hvac_component coveriing access_openings.

4.2.174 specific_attaching_part: a type of specific_discrete_part that supports, restrains, operates or insulates.

4.2.175 specific_control_device: a type of specific_device exercising a control function.

4.2.176 specific_device: a type of specific_engineering_part with significant functions other than the distribution of a medium or information such as control (specific_control_device), measurement (specific_instrument) or various other classes of function (specific_equipment).

4.2.177 specific_discrete_part:

4.2.178 specific_distribution_end: a type of specific_end_spiv through which a distribution medium can pass.

4.2.179 specific_distribution_part: a type of specific_engineering_part whose primary function is to distribute a medium.

4.2.180 specific_duct_coil: a type of specific_hvac_coil representing a cooling coil to be mounted in line in an hvac duct.

4.2.181 specific_duct_heater: a type of specific_hvac_heater. May be steam or electrical and represents a heater to be mounted in line in an hvac duct.

4.2.182 specific_electrical_duct_heater: a type of specific_duct_heater producing heat by applying electrical power to heating elements.

4.2.183 specific_electrical_space_heater: a type of free standing specific_hvac_heater not mounted in an hvac duct and generating heat by the application of electrical power to heating elements.

4.2.184 specific_engineering_part: a type of specific_product_spiv representing an engineering part definition which can be referenced by many occurrences of the part definition.

4.2.185 specific_engineering_part_design:

4.2.186 specific_engineering_part_implementation:

4.2.187 specific_engineering_part_shape: relates a particular shape representation to a specific_engineering_part, each having a particular shape type or form (e.g.diagrammatic, or 3-D detailed), to present or depict the part. There may be several different specific_engineering_part_shapes used for the representation of one specific_engineering_part.

4.2.188 specific_engineering_part_shape_representation: represents one of perhaps several geometries/shapes of a specific_engineering_part.

4.2.189 specific_equipment: a type of specific_engineering_part representing a particular piece of equipment.

4.2.190 specific_equipment_design:

4.2.191 specific_equipment_implementation:

4.2.192 specific_fan: a type of specific_hvac_fan.

4.2.193 specific_fastener: a type of specific_attaching_part, a member of a specific_fastener_set used in completing a physical connection between two parts.

4.2.194 specific_fastener_set: a collection of quantities of specific_fasteners packaged together and occurring as a set in association with the joining of attachments and joints.

4.2.195 specific_gravity_coil: a type of specific_hvac_coil.

4.2.196 specific_hvac_active_filter: a type of specific_hvac_equipment mechanically or electrically filtering air.

4.2.197 specific_hvac_coil: a class of specific_hvac_fan/coil having an integral cooling coil.

4.2.198 specific_hvac_component: the class of specific_hvac_parts containing other than hvac duct.

4.2.199 specific_hvac_component design:

4.2.200 specific_hvac_component_implementation:

4.2.201 specific_hvac_device: the class of specific_hvac_component comprised of specific_hvac_passive_filters and specific_hvac_flow_control_devices. These are in line components with information requirements significantly different from those of the other principle subtype of specific_hvac_component, specific_hvac_fitting.

4.2.202 specific_hvac_duct: the class of specific_hvac_part for ducting.

4.2.203 specific_hvac_duct_design: the set of design data associated with a specific_hvac_duct consisting of pressure_loss/foot and maximum_velocity.

4.2.204 specific_hvac_duct_implementation:

4.2.205 specific_hvac_equipment: the class of specific_equipment comprised of the equipment with a direct hvac function, such as heaters and fans.

4.2.206 specific_hvac_fan: the class of specific_hvac_fan/coil with integral fans.

4.2.207 specific_hvac_fan/coil: the class of specific_hvac_equipment with either an integral fan or cooling coil or both.

4.2.208 specific_hvac_fan/coil_assembly: a type of hvac equipment with an integral fan and cooling coil.

4.2.209 specific_hvac_fastener: the class of specific_fasteners used in fabricating hvac joints.

4.2.210 specific_hvac_fitting: a type of in line specific_hvac_component with pressure loss properties dependent on its type and size.

4.2.211 specific_hvac_flow_control_device: the class of specific_hvac_device dynamically modifying the air flow direction or quantity in an hvac system. Examples include smoke_control_valves,

fire_dampers, pressure_control_valves, watertight_closures, anti-blast_valves, desmoke_dampers and diverting_dampers.

4.2.212 specific_hvac_heater: a type of specific_hvac_equipment to heat air.

4.2.213 specific_hvac_part: a type of specific_distribution_part used in hvac systems.

4.2.214 specific_hvac_part_design:

4.2.215 specific_hvac_part_implementation:

4.2.216 specific_hvac_passive_filter: a type of specific_hvac_device containing a non-active filter element to filter air in an hvac system.

4.2.217 specific_hvac_passive_filter_design:

4.2.218 specific_hvac_passive_filter_implementation:

4.2.219 specific_hvac_port: a type of specific_distribution_end which, as an hvac_port_occurrence, can be connected to other such ports via an hvac_interface_occurrence.

4.2.220 specific_hvac_port_design:

4.2.221 specific_hvac_port_implementation:

4.2.222 specific_hvac_turn/elbow a type of specific_hvac_fitting containing a significant change in direction between its inlet and outlet specific_hvac_port.

4.2.223 specific_instrument: a type of specific_device to measure a parameter.

4.2.224 specific_instrument_design:

4.2.225 specific_instrument_implementation:

4.2.226 specific_insulation_envelope: a type of specific_part_envelope representing the volume occupied by the insulation on its associated specific_engineering_part.

4.2.227 specific_insulation_part: a type of specific_attaching_part which can occur as an insulation_part_occurrence when applied to an engineering_part_occurrence. A specific_insulation_part can have its own specific multi-material composition and part identity.

4.2.228 specific_interface_ship_product_item_version: the class of ship_product_item_version associating two or more end_ship_product_item_versions.

4.2.229 specific_part_envelope: relates a particular shape representation to a specific_engineering_part to check interference. Several different specific_part_envelopes, each having a particular type or purpose (e.g. insulation, shock clearance, access), may be defined for one specific_engineering_part.

4.2.230 specific_part_envelope_shape_representation: represents the geometry/shape of a specific_part_envelope.

4.2.231 specific_path_arc: a line or arc definition associated with a specific_engineering_part used, in conjunction with others, to define its centerline geometry.

4.2.232 specific_path_arc_center: the coordinates of the center of a circular arc specific_path_arc relative to the local coordinate system of the specific_engineering_part to which the arc belongs.

4.2.233 specific_path_arc_radius: the length of the radius of a circular specific_path_arc.

4.2.234 specific_path_node: delimits the start and end of a specific_path_node. Its location may be used, after transformation to model coordinates, to locate one or more path_nodes.

4.2.235 specific_path_node_location: the coordinates of a point locating a specific_path_node relative to the local coordinate system of the specific_engineering_part to which the arc it delimits belongs.

4.2.236 specific_regulating&control_valve: a type of valve used to regulate or control the pressure or flow of a medium through a piping system.

4.2.237 specific_regulating&control_valve_design:

4.2.238 specific_regulating&control_valve_implementation:

4.2.239 specific_steam_duct_heater: a type of specific_duct_heater using steam to heat the air flowing in a duct.

4.2.240 specific_unit_cooler: a type of hvac equipment containing an integral coil and fan.

4.2.241 specific_unit_heater: a type of specific_hvac_heater containing an integral fan and heating element.

4.2.242 standard_cross_section: an entity defining the parameters describing the cross section shape of an hvac port for the shapes of round, rectangular, flat oval and radiused corner.

4.2.243 steam_duct_heater_occurrence: a type of duct_heater_occurrence using steam to heat the air in the duct where it is installed.

4.2.244 switch_occurrence: a type of control_device_occurrence used to turn a flow on and off.

4.2.245 system_operational_component_hvac_test_element: a type of hvac_test_element defining one step of an hvac_test to validate the operation of various hvac components of hvac systems and their control features.

4.2.246 system_operating_condition: a particular, named state of operation of an engineering_system_occurrence (e.g. “cruising”).

4.2.247 system_performance_balance_hvac_test_element: a type of hvac_test_element defining one step of an hvac_test to verify that the air flow required to each of the compartments it serves is obtained.

4.2.248 system_ship_product_item: a type of ship_product_item representing a functional aggregation of engineering_part_occurrences.

4.2.249 system_ship_product_item_version: a version of a system_ship_product_item.

4.2.250 thermostat_occurrence: a type of control_device_occurrence used to measure and regulate temperature.

4.2.251 total_part_insulation_thickness: the total thickness of insulation associated with a specific_insulation_part.

4.2.252 unit_cooler_occurrence: a type of hvac equipment containing an integral coil and fan.

4.2.253 unit_heater_occurrence: a type of hvac_test_element containing an integral fan and heating element.

4.2.254 watertight_integrity_hvac_test_element: a type of hvac_test_element defining one step of an hvac_test to verify the proper operation of all watertight closures and their controllers.

4.2.255 zone occurrence: a type of space_ship_product_item_version delineating a useful region or volume of a ship for design or operational reasons.

4.3 Application assertions

This subclause specifies the application assertions for the HVAC application protocol. Application assertions specify the relationships between application objects, the cardinality of the relationships, and the rules required for the integrity and validity of the application objects and UoFs. The application assertions and their definitions are given below.

4.3.1 Ship product item configuration management

The NIDDESC configuration management model provides the information structures necessary to exchange ship configuration status accounting data between enterprises. This includes the control of change to the thousands of Ship Product Items and their interrelationships contained in a ship's product model. The model supports the entire ship life cycle including design, construction, operation and maintenance. The model provides information structures for product versioning, hull applicability, product approval, product promotion and product structuring, and is intended as a common template for NIDDESC application protocols.

The scope of the NIDDESC configuration management model is the exchange of configuration status accounting data as part of the ship product model data exchange. The scope includes the entire ship life cycle. The scope does not include the sharing of configuration status accounting data in a shared data base environment. Data exchange in this context referes to the use of a neutral data format and translators to transfer data between dissimilar CAD systems. Data sharing in this context refer to the use of a common database that dissimilar CAD systems can access directly. The data exchange scope eliminates the need for the model to support data access control, change notification, or partial promotion. Access control includes authorization for read or write access to data. Change notification includes automatic notification of related data owners that significant modifications have occurred. Partial promotion includes the need to promote a portion of an item while allowing other portions to continue to be modified.

4.3.2 Fundamental concepts

4.3.2.1 Product versioning

The basic building block of the NIDDESC configuration management model is the ship product item (SPI). SPI is an abstract entity that is further specified through the definition of its subtypes in each of the NIDDESC application protocols (APs). An SPI is a place holder for any entity in an AP whose configuration needs to be managed. Each SPI has one or more versions, or ship product item versions (spiv).

An SPIV is a unique variation of an SPI identified by the concatenation of the SPI’s identifier and a specific version. For example, a drawing is an SPI and every drawing revision is an SPIV. A new version of an SPI is created as a result of a need to modify an existing version of the SPI. However, not every modification requires the creation of a new version. Determining when to create a new version is governed by the rules in section 4.3.5.1.

The SPIV also supports the exchange of design alternatives. For example, if version A of an SPI exists and two alternative designs for the same SPI are started, then one alternative would be designated as version B and the other version C. This allows the alternatives to be versioned separately. The parentage of the versions is explicitly maintained by the entity creation, modification, deletion event rather than implicitly by sequential versions.

4.3.2.2 Product structuring

Product structure in the context of this model goes beyond the traditional concept of assemblies of parts to form a final product. It is used in this model to identify relationships between SPIVs for assembly definition, system definition, zone or space definition, or any other grouping of purpose.

A product structure, in this model, consists of a context SPIV and one or more component SPIVs. Each component SPIV is related to the context SPIV through the role "is_component_in/is_context_for". This role is itself an entity called SPIV relationship. For example, an subassembly (A1) consists of several parts. The sub- assembly (A1) is a context SPIV and each part is a component SPIV. The relationship between each part and the sub-assembly is an SPIV Relationship. The sub-assembly (A1) may also be a component in a higher level assembly. In this situation the sub-assembly is a component SPIV and the assembly is a context SPIV. Therefore, an SPIV can be both a component SPIV and a context SPIV. A part that is a component SPIV in sub-assembly (A1) can also be a component SPIV in another context SPIV such as a system. Therefore, an SPIV can be a component SPIV in more than one context SPIV.

4.3.2.3 Significant change

In a product structure the SPIV Relationship between the context SPIV and each of its component SPIVs has an SPIV relationship context. This entity defines what is significant about the context SPIV and component SPIV in their relationship. For example, a valve (V1) is a component in two product structures, system (SYS1) and space (SP1). In the relationship between the valve and the space only the shape, position and orientation aspects of the valve are significant. That is, the shape, position and orientation of the valve are important to the space and therefore can not change without consequence to the space. The functional aspects of the valve, such as maximum operating pressure, are not significant to the space but they are to the system. Therefore, if the maximum operating pressure changes it is of no consequence to the space but it may have dramatic consequences to the system.

The concept of significant change is very important in a shared database environment where automatic change notification and partial promotion will occur. It is of less importance in a transfer where neither of these occur. In a transfer situation the SPIV relationship context provides the sender of the exchange file a place to identify what was significant about the component SPIV and context SPIV in their relationship and allows the receiver of the exchange to determine the impact of future changes.

4.3.2.4 Product structure and version propagation

When a change occurs, causinga new version of a component in a product structure, the decision to create a new context SPIV is one that must be made by the creator of the change. This decision is based on the significance of the change to the higher level entity. If this was not true then any version change at the lowest level would cause the highest level version to change. For example, a bolt is a component in a pre-assembly which is a component in an assembly which is a component in a module which is a component in a ship. If the version of the bolt changes then the version of ship would also change. This is clearly impractical. Theoretically the ship is different but the change to the bolt is insignificant in the context of the entire ship and therefore the propagation of the version change would stop before it got to the ship level.

The above paragraph addresses version propagation from the bottom up. The same is true, however, for version propagation from the top down. For example, if the operating pressure of a system changes, this

change is significant to the components of the system and may cause new versions of the components to be created.

When a new SPIV is created every SPIV relationship that the old SPIV is a “context for” or a “component of” must be evaluated to determine if the relationship should be copied to the new SPIV. The decision to copy the relationship is based on the significance of the change, the promotion level of the opposite SPIV and the hull applicability of both the opposite and new SPIV. Opposite SPIV here refers to the SPIV on the other side of the SPIV relationship from the old SPIV.

4.3.2.5 Product approval

Another basic building block of the NIDDESC configuration management model is the entity configuration SPIV. A configuration SPIV is a type of product structure that groups SPIVs together for the purpose of approval. Without it each SPIV in a product structure would have to be approved individually. It employs a special type of SPIV relationship called an approval relationship. For example, in many enterprises today a drawing revision is used as the approval mechanism for the portion of the product that it represents. A drawing revision representing 20 structural parts, all SPIVs, is approved or rejected as a whole rather than each individual part being approved or rejected individually. The drawing revision, in this example, is a configuration SPIV that is the approval context for each structural part. In the above example the configuration SPIV was a drawing, but a configuration SPIV does not have to be a document. It can be any product structure such as an assembly, a system, or a space. Configuration SPIVs will be project specific and therefore should not be defined in an application protocol.

A configuration SPIV has an approval relationship with each SPIV for which it is the context. The approval relationship carries an attribute identifying the approval status of the SPIV, “unapproved”, “approved", or “rejected"(see section 4.3.5.3), in the context of the configuration SPIV and the date and time that this status was achieved. Configuration SPIVs will be project specific and therefore should not be defined in an application protocol.

In the traditional drawing review cycle several signatures (i.e. approvals), each from a different prespective, may be required before a drawing can be issued. For example, an arrangement drawing may require piping system owner’s, HVAC system owner’s, equipment owner’s and the foundation owner’s signatures before it may be issued. The NIDDESC configuration model is designed to support this shared approval authority of the SPIVs. For example, a pipe may have shared ownership. The functional aspect of the pipe is owned by the system product structure, its shape and orientation aspects may be owned by the space product structure, and its assembly aspects may be owned by the assembly product structure. Therefore, a component SPIV may be a component in more than one approval relationship. In this example, the system, zone, and assembly are all separate configuration SPIVs with an approval relationship with the pipe.

A configuration SPIV has an approval relationship with each SPIV for which it is the context. The approval relationship has one or more approval events. The approval event carries an attribute identifying the approval status of the SPIV, “unapproved”, “approved”, “rejected”, or “reserved” (see section 4.3.5.3), in the context of the configuration SPIV and the date and time that this status was achieved. The collection of all the approval events of an approval relationship is the approval history of the relationship.

4.3.2.6 Product promotion

Product promotion works hand-in-hand with product approval. It establishes three basic levels of promotion for an SPIV and identifies the promotion level to the receiver of the product data. The three levels of approval are defined in section 4.3.5.2.

An analogy for product promotion is found in the drawing development process. While a drawing is being created changes are occurring relatively quickly and anyone needing information from the drawing knows the data is subject to change. This is the "working" level of promotion. Once the drawing is completed it must be checked and signed by one or more persons in authority. While it is going through this approval process it is subject to change, but if it is significantly changed it must start the approval process again, i.e. its approval flags must all be reset. This is the "preliminary" level of promotion. Once the drawing has been checked and signed by all the necessary parties it is considered issued and anyone needing information from the drawing knows the data will not be changed until the next revision of the drawing. This is the "issued" level of promotion.

4.3.2.7 Hull applicability

In the marine industry the concept of hull applicability is extremely important to configuration management. The hull represents a single ship. Hull applicability defines the relationship between an SPIV and one or more hulls. Using hull applicability, the receiver of the product data can unambiguously determine which version of each SPI is used for each hull. Also, the receiver can unambiguously determine on which hull or hulls an individual SPIV is used or designed to be used. Conceptually a hull is just another configuration SPIV. However, because of the complexity of an entire hull, the concept of versioning the hull is of little use. A hull is instead today defined by a list of drawing/revisions which, in the context of this model, are configuration SPIVs.

In this model, hull applicability is accomplished by the entity hull and its roles to occurrence SPIVs and physical occurrence SPIVs (see section 4.3.6 for entity descriptions). An occurrence SPIV may be applicable to one or more hulls, but a physical occurrence SPIV may be applicable to one and only one hull.

4.3.2.8 Activity diagram

Figure 1 in [5] is an $IDEF_0$ activity diagram representing the activities that this model is intended to support. Figures 2,3 and 4 in [5] are traditional flow diagrams further describing the rules governing the change control process.

4.3.3 Functional requirements

The minimum functional requirements the model is intended to fulfill are described in the following sections.

4.3.3.1 Configuration status accounting

Provide a template for configuration status accounting for NIDDESC application protocols. This includes changes during the entire life cycle for both formal changes and design iteration changes.

4.3.3.2 Product versioning

Provide a template for product versioning to support change management, multiple hulls and multiple design versions.

Required data for each ship product item:
— identification
— version
— creation, modification, deletion description and date/time
— change identifier
— SPIV relationships and relationship context
— hull applicability
— promotion level
— transfer status

4.3.3.3 Hull applicability

Provide a template for hull applicability for NIDDESC application protocols.

Required data for each ship product item:
— identification
— version
— hull identifier

4.3.3.4 Product approval

Provide a template for product approval and product reservation for NIDDESC application protocols.

Required data for each ship product item:
— identification
— version
— approval flag and date/time
— change identifier
— creation, modification, deletion description and date/time
— approval relationships and relationship context

4.3.3.5 Product promotion

Provide a template for product promotion for NIDDESC application protocols.

Required data for each ship product item:
— identification
— version
— creation, modification, deletion description and date/time
— promotion level and date/time
— SPIV relationships and relationship context
— approval flag and date/time
— change identifier

4.3.3.6 Product structuring

Provide a template for product structuring for NIDDESC application protocols. The product structuring must support assembly views, system views, and space arrangement views.

Required data for each ship product item
— identification
— version
— SPIV relationships

4.3.4 Definitions

— **approval:** the process of reviewing and accepting a component SPIV in the context of a configuration SPIV.

— **configuration status accounting:** maintaining records containing information concerning the current, proposed, and passed configuration of SPIs and their relationships.

— **enterprise:** the identification of a supplier/manufacturer/consumer of a product (in-house or external).

— **promotion:** the process of elevating the promotion level of an SPIV from its current level to the next highest promotion level.

— **significant change:** a change to an SPIV important to another SPIV. The importance of the change to another SPIV is defined by a set of rules, SPIV relationship context, that are part of the relationship between the two SPIVs.

4.3.5 Business rules

4.3.5.1 Versioning of ship product item versions

As discussed in section 4.3.2.1 the decision to create a new version, and what to do with the SPIV relationships in response to a change is the responsibility of the creator/sender of the product data. There are a few exceptions to this rule. These decisions are based on the following rules:

New SPIV rules:

— If an SPIV is at the promotion level of “issued” any significant change requires the creation of a new version.

— If an SPIV is at the promotion level of “preliminary”, a new version is optional. To modify a “preliminary” SPIV it must first be demoted to “working”.

— If an SPIV has been transferred, a new version must be created if it has been significantly changed since the transfer, regardless of the SPIV’'s promotion level. In effect, the SPIV must be treated as if it was “issued” any time it is transferred between enterprises.

SPIV relationship rules:

— If the change is not significant in the SPIV relationship and the hull applicability is consistent, then the relationship between the new SPIV and opposite SPIV should be copied. Any approval events should be copied unchanged.

— If the change is not significant in the SPIV relationship and the hull applicability is not consistent, then the relationship between the new SPIV and the opposite SPIV should not be copied. A new version of the opposite SPIV may be necessary.

— If the change is significant in the SPIV relationship and the opposite SPIV is at the “preliminary” promotion level, then a new version of the opposite SPIV is optional. If a new version is not desired, the opposite SPIV must be demoted to “working”. The SPIV relationship between the new SPIV and the opposite SPIV should be copied. Any approval events should not be copied.

— If the change is significant in the SPIV relationship and the opposite SPIV is at the “working” promotion level, then a new version of the opposite SPIV is optional. The SPIV relationship between the new SPIV and the opposite SPIV should be copied. Any approval events should not be copied.

4.3.5.2 Promotion rules for ship product item versions

The promotion of SPIV is accomplished by raising the promotion level to the next highest level. The promotion level is an indicator of where a specific SPIV is in the approval process. The following are the allowed promotion levels:

— working: indicates the item is still under development and therefore subject to significant change. Only “working” SPIVs may be significantly changed.

— preliminary: indicates the item has started the approval process. “Preliminary” SPIVs cannot be significantly changed. However, a “working” SPIV can be repromoted and replace a “preliminary” SPIV. If this occurs all approval flags must be reset to "unapproved".

— issued: indicates the item has completed the approval process. Once an SPIV has reached the “issued” promotion level, it can never be deleted or significantly changed.

The following rules apply to promotion:

— A context SPIV may not be promoted until all the SPIVs for which it is the context have been promoted to at least the promotion level requested for the context SPIV or had their reservation flag set to “reserved". (See figure 5 in [5])

— The reservation flag is used to allow a context SPIV to be promoted even if all its component SPIVs are not. It permits an exception to the rule stated above.

For example, this may be necessary when a system is ready to be issued except for a small portion waiting for official customer approval. Ideally the system should not be issued, but in the real world the

system could be issued with a reservation of the parts in question. This allows the manufacturer of the system to get started while waiting for official notification concerning the small portion.

— A component SPIV may not be promoted to “issued” until all approval relationships it is a component in have approval flags set to “approved” and there are no “reserved" reservation Flags. (see figure 5 in [5]). The “reserved” reservation flag has the same affect on the promotion of a component SPIV in an approval relationship as the “unapproved” flag. That is it may not be promoted to “issued” until all reservation flags are removed and its approval flag set to “approved".

— Once an SPIV has been promoted to “preliminary” or “issued” it can not be significantly changed. If a significant change to a “preliminary” SPIV is required it must be demoted to “working”, be changed, and then repromoted to “preliminary”. This action must cause all its “approved” approval flags to be reset to “unapproved”.

— If a configuration SPIV is “issued” with a reservation against one of its component SPIVs, the approval flag on the component SPIV must remain “unapproved” until the reservation flag is set to “unreserved”. If the component SPIV is unacceptable in the context of the configuration SPIV, this constitutes a significant change to the configuration SPIV. Therefore, a new version of the configuration SPIV must be created; the old one remains with a reservation against the component SPIV.

4.3.5.3 Approval rules for ship product item versions

The approval of a component SPIV, within the context of a configuration SPIV (see section 4.3.2.5), is indicated by setting the approval flag of the latest approval event of an approval relationship to “approved”. The approval flag works hand in hand with SPIV promotion (see sections 4.3.2.6 and 4.3.5.2) and is used only between the “preliminary” and “issued” level of promotion. A single component SPIV may have an approval relationship with many configuration SPIVs. The allowed approval flag values are:

— unapproved: this indicates the component SPIV has not been reviewed or is in the process of being reviewed for approval in the context of the configuration SPIV.

— approved: this indicates the component SPIV has been approved in the context of the configuration SPIV.

— rejected: this indicates the component SPIV has been rejected in the context of the configuration SPIV.

The following rules apply to approval:

— A component spiv may not be promoited to “issued” until all the approval relattionships that it is a component in have approval flags set to “approved”. (See figure 4 in [5])

— A component SPIV may not be promoted to “issued” until all the reservation flags against the component SPIV have been set to “unreserved”

4.3.5.4 Deletion rules for ship product item versions

The deletion of an SPIV is always considered a significant change. The following rules apply to the deletion of an SPIV.

— A “working” or “preliminary” SPIV can simply be erased, unless it has been transferred.

— An “issued” SPIV or one that has been transferred must not be erased. A new version must be created and the new version flagged as deleted.

4.3.5.5 Demotion rules for ship product item versions

Only “preliminary” SPIVs may be demoted. Once an SPIV is “issued” it may not be demoted to “preliminary” or “working”.

The following rules apply to the demotion of a “preliminary” SPIV:

— If a “preliminary” SPIV needs to be demoted a new promotion event should be added to the SPIV with a promotion level of “working” and the current date/time.

— Every approval relationship the demoted SPIV is a “component in” must have its approval flag set to “unapproved”.

4.3.6 Configuration management entity descriptions

4.3.6.1 adjudicated cost: the adjudicated cost of a change.

4.3.6.2 approval event: an entity composed of one approval flag and one date/time. Each approval relationship has one or more approval event. The collection of all approval events of an approval relationship provides the approval history.

4.3.6.3 approval flag: an attribute attached to an approval relationship identifying the approval level of the component SPIV in the context of the context SPIV of the approval relationship. The allowed values are defined in section 4.3.5.3.

4.3.6.4 approval relationship: a type of SPIV relationship defining the relationship between a configuration SPIV and its component SPIVs. It carries an approval event.

4.3.6.5 change: a formal request for change to one or more SPIVs. Examples are headquarters modification request (HMR) and engineering change proposal (ECP).

4.3.6.6 change alternative: one of many ways possible to satisfy the requirements of a change. The change alternative may point to zero, one or many SPIVs it will impact.

4.3.6.7 change alternative identification: identifies a change alternative.

4.3.6.8 change status event: an attribute of change identifying the status of the change and when it reached that status.

4.3.6.9 change status: the status of a change. Examples are “accepted”, “rejected”, “working”, “complete”.

4.3.6.10 change type: an attribute of change identifying what type of change it is. For example, it might be a headquarter’s modification request (HMR) or an engineering change proposal (ECP).

4.3.6.11 configuration change: a link relating a change with a configuration SPIV.

4.3.6.12 configuration change status: the status of the incorporation of a particular change in a particular configuration SPIV.

4.3.6.13 configuration ship product item version: a type of SPIV grouping other SPIVs together for the purpose of configuration status accounting. Examples of configuration SPIV are drawings, systems, zones, or assemblies. A configuration SPIV is the approval context for one or more SPIVs.

4.3.6.14 context ship product item version: a type of SPIV; the parent in a product structure relationship.

4.3.6.15 contractor change identification: identifier assigned to a change by the enterprise that will execute the Change.

4.3.6.16 component ship product item version: a type of SPIV; the child in a product structure relationship.

4.3.6.17 creation, modification, deletion event: causes the creation, modification, or deletion of a single SPIV. The creation, codification, deletion event entity links the created, modified, or deleted SPIV with the SPIV used as its baseline. It may be one of many creation, modification, deletion events contained in a given formal change or part of a design iteration with no formal change. It is identified by the concatenation of the created, modified, or deleted SPIV's identifier and the date/time it occurred.

4.3.6.18 customer change identification: identifier assigned to a change by the customer.

4.3.6.19 date/time: identifies the date and time an event occurs. Date/time is used to identify the date and time a creation, modification, deletion event, promotion event, or change status event occurs. This allows the user of the digital data to determine when changes have occurred in the product model.

4.3.6.20 estimated cost: estimated cost of a change alternative.

4.3.6.21 event description: a textual description of a creation, modification, deletion event.

4.3.6.22 event type: an attribute of a creation, modification, deletion event identifying it as a creation, modification, or deletion event.

4.3.6.23 generic ship product item version: a type of SPIV providing a parametric definition for a specific ship product item.

4.3.6.24 hull: a particular ship of a class of ships.

4.3.6.25 occurrence ship product item version: a unique SPIV that is part of the design of a product (see figures 8 and 9 in [5]). The design may be built several times and therefore the occurrence SPIV may be applicable to more than one hull. Typically an occurrence SPIV points back to a specific SPIV either for its complete definition, as in the case of a valve, or for its made from material, as in the case of a steel plate part cut from sheets. Occurrence SPIVs would have attributes such as functional group code (FGC) and drawing & find number.

4.3.6.26 parameter set: a set of values that, when supplied with a generic SPIV, define a specific SPIV.

4.3.6.27 person and organization: entity from STEP Part 41 (ISO 10303-41) identifying a person and his/her organization.

4.3.6.28 physical ship product item version: a unique SPIV, the physical manifestation of a specific SPIV (see figures 6 and 7 in [5]). For example, a purchased pump will have a serial number. The purchased pump is a physical manifestation of the pump design with a manufacturer and model

number. In this example the purchased pump is a physical SPIV and the pump design is a specific SPIV. Both the physical SPIV and the specific SPIV are independent of a hull. A physical SPIV can be used on hull 688 and removed, overhauled and used on hull 689.

4.3.6.29 physical occurrence ship product item version: a unique SPIV, the physical manifestation of an occurrence SPIV (see figures 6 and 7 in [5]). A physical occurrence SPIV is applicable to one and only one hull. It is a logical copy of its occurrence SPIV with as-built or as-modified differences included.

4.3.6.30 potential ship product item version change: a linking entity relating a change alternative to one SPIV. A change alternative may affect many SPIVs and would, therefore, have many potential SPIV change entities.

4.3.6.31 promotion event: identifies a promotion level change for an SPIV and when it occurs. An SPIV may have zero, one or many SPIV promotion events. The collection of all the promotion events for an SPIV provides a promotion history.

4.3.6.32 promotion level: indicates where a specific SPIV is in the approval process. The allowed values are defined in section 4.3.5.2.

4.3.6.33 reservation description: a textual explanation of the reason for the reservation event.

4.3.6.34 reservation event: carries the reservation flag, reservation description, and date/time of an act of reserving or unreserving an SPIV within the context of a context SPIV.

4.3.6.35 ship product item: anything whose configuration one wishes to manage. SPI includes engineering parts, assemblies, systems, and spaces. For example, for the NIDDESC application protocols the SPIs consist of, but are not necessarily limited to, the following:

— Ship's Structural Model

- plate
- joints
- holes
- deck
- shapes
- surfaces
- assemblies
- bulkhead

— Distribution Systems Models

- pipes
- ducts
- joints
- assemblies
- components
- wireways
- systems

4.3.6.36 ship product item version: a unique variation of an SPI identified by the concatenation of the SPI's identifier and a specific version. A single SPIV can be viewed from many different perspectives. For example, a pipe hanger can be viewed as a simple support point on a pipe, as a structural member with specific degrees of freedom, as a group of parts to be ordered, or as geometry

for interference analysis. Each of these views has different sets of attributes and different geometry, but all are represented by the same SPIV.

4.3.6.37 ship product item version relationship: relationship between two SPIVs defined by an application protocol. Some of the types of relationships are connectivity, assembly, system, and approval.

4.3.6.38 ship product item version relationship context: a set of rules defining the significance, to each other, of the two SPIVs of an SPIV relationship. (See significant change section 4.3.2.3.)

4.3.6.39 ship product item version relationship type: an attribute of an SPIV relationship identifying the type of relationship between the two SPIVs. Used to identify hierarchical structures within the network of product structures possible with this model. For example, a type of "source" could be used to identify the configuration SPIV a component SPIV is purchased from. This helps avoid purchasing the same part more than once.

4.3.6.40 specific ship product item version: items that may occur more than once in a design (see figures 6 and 7 in [5]). Typically specific SPIVs are maintained in libraries. Specific SPIVs may represent complete parts such as a pump, or stock material such as steel beam material available in 20' lengths.

4.3.6.41 transfer event: identifies the person who received a transfer of digital product model data and the date/time the data was sent.

5. Application Interpreted Model

5.1 Mapping table

This section contains the specification of how the entities, attributes and relationships defined in the ARM (annex F) are to be implemented in terms of computer-sensible representations for purposes of data transfer. In the following subsections each ARM entity, attribute and relationship is mapped to a corresponding AIM entity from one of the references, above, or a defined type. Entity names are given in uppercase (e.g. ENTITY_NAME). Attributes and simple, defined, enumeration and select types in lowercase (e.g. attribute_name). Selections from SELECT types are quoted (e.g. “SELECTION” or “selection”). The notation “-->“ indicates the mapping of an attribute. The mapping of entities to AIM entities that are subtypes is documented by indicating first the next or top-level supertype with a “<-” symbol, followed on subsequent lines by each level of subtype of that supertype until arriving at the mapped AIM subtype. The designations “NH”, “ND”, “NCM”, and “NL” for ISO 10303 Part, stands for NIDDESC HVAC, distribution, configuration management and library parts, respectively

5.1.1 Principal entities

ARM ENTITY/attribute	ISO 10303 Part	AIM ENTITY/attribute
ASSEMBLY_OCCURRENCE	ND	ND_PRODUCT_SPIV_OCCURRENCE<-
	ND	ND_ASSEMBLY_OCCURRENCE
COMPARTMENT_OCCURRENCE	ND	ND_SPACE_OCCURRENCE<-
	ND	ND_COMPARTMENT_OCCURRENCE
CONTROL_DEVICE_OCCURRENCE	ND	ND_DEVICE_OCCURRENCE<-
	ND	ND_CONTROL_DEVICE_OCCURRENCE
CPS_ZONE_OCCURRENCE	ND	ND_ZONE_OCCURRENCE<-
	NH	NH_CPS_ZONE_OCCURRENCE
DEVICE_OCCURRENCE	ND	ND_ENGINEERING_PART_OCCURRENCE<-
	ND	ND_DEVICE_OCCURRENCE
DEVICE_OCCURRENCE_DESIGN	ND	ND_DEVICE_OCCURRENCE<-
	ND	ND_DEVICE_OCCURRENCE_DESIGN
DEVICE_OCCURRENCE_IMPLEMENTATION	ND	ND_DEVICE_OCCURRENCE<-
	ND	ND_DEVICE_OCCURRENCE_IMPLEMENTATION
DISCRETE_PART_OCCURRENCE	ND	ND_ENGINEERING_PART_OCCURRENCE<-
	ND	ND_DISCRETE_PART_OCCURRENCE
DISTRIBUTION_PART_OCCURRENCE	ND	ND_ENGINEERING_PART_OCCURRENCE<-
	ND	ND_DISTRIBUTION_PART_OCCURRENCE
DISTRIBUTION_SYSTEM_OCCURRENCE	ND	ND_ENGINEERING_SYSTEM_OCCURRENCE<-
	ND	ND_DISTRIBUTION_SYSTEM_OCCURRENCE
END_SPIV_OCCURRENCE	ND	ND_OCCURRENCE_SPIV<-
	ND	ND_END_SPIV_OCCURRENCE
ENGINEERING_PART_OCCURRENCE	ND	ND_PRODUCT_SPIV_OCCURRENCE<-
	ND	ND_ENGINEERING_PART_OCCURRENCE
ENGINEERING_SYSTEM_OCCURRENCE	ND	ND_PRODUCT_SPIV_OCCURRENCE<-
	ND	ND_ENGINEERING_SYSTEM_OCCURRENCE
EQUIPMENT_OCCURRENCE	ND	ND_DEVICE_OCCURRENCE<-
	ND	ND_EQUIPMENT_OCCURRENCE
EQUIPMENT_OCCURRENCE_DESIGN	ND	ND_EQUIPMENT_OCCURRENCE<-
	ND	ND_EQUIPMENT_OCCURRENCE_DESIGN
EQUIPMENT_OCCURRENCE_IMPLEMENTATION	ND	ND_EQUIPMENT_OCCURRENC<-E
	ND	ND_EQUIPMENT_OCCURRENCE_IMPLEMENTA-TION
HVAC_ASSEMBLY_OCCURRENCE	ND	ND_ASSEMBLY_OCCURRENCE<-
	NH	NH_HVAC_ASSEMBLY_OCCURRENCE
HVAC_PART_OCCURRENCE	ND	ND_DISTRIBUTION_PART_OCCURRENCE<-
	NH	NH_HVAC_PART_OCCURRENCE
HVAC_COMPONENT_OCCURRENCE	NH	NH_HVAC_PART_OCCURRENCE<-
	NH	NH_HVAC_COMPONENT_OCCURRENCE
HVAC_DUCT_OCCURRENCE	NH	NH_HVAC_PART_OCCURRENCE<-

	NH	NH_HVAC_DUCT_OCCURRENCE
HVAC_EQUIPMENT_OCCURRENCE	ND	ND_EQUIPMENT_OCCURRENCE<-
	NH	NH_HVAC_EQUIPMENT_OCCURRENCE
HVAC_FAN_COIL_OCCURRENCE	NH	NH_HVAC_EQUIPMENT_OCCURRENCE<-
	NH	NH_HVAC_FAN_COIL_OCCURRENCE
HVAC_HEATER_OCCURRENCE	NH	NH_HVAC_EQUIPMENT_OCCURRENCE<-
	NH	NH_HVAC_HEATER_OCCURRENCE
HVAC_ACTIVE_FILTER_OCCURRENCE	NH	NH_HVAC_EQUIPMENT_OCCURRENCE<-
	NH	NH_HVAC_ACTIVE_FILTER_OCCURRENCE
INTERFACE_SPIV_OCCURRENCE	ND	ND_OCCURRENCE_SPIV<-
	ND	ND_INTERFACE_SPIV_OCCURRENCE
INSTRUMENT_OCCURRENCE	ND	ND_DEVICE_OCCURRENCE<-
	ND	ND_INSTRUMENT_OCCURRENCE
PRODUCT_SPIV_OCCURRENCE	NCM	NCM_OCCURENCE_SPIV<-
	ND	ND_PRODUCT_SPIV_OCCURRENCE
SHIP_PRODUCT_ITEM	NCM	NCM_SHIP_PRODUCT_ITEM<-
	41	PRODUCT
SHIP_PRODUCT_ITEM_VERSION	NCM	NCM_SHIP_PRODUCT_ITEM_VERSION<-
	41	PRODUCT_VERSION
SHIP_PRODUCT_ITEM_VERSION/version	NCM	NCM_SHIP_PRODUCT_ITEM_VERSION/version-->
	41	PRODUCT_VERSION/version
SPACE_SPIV_OCCURRENCE	ND	ND_OCCURRENCE_SPIV<-
	ND	ND_SPACE_SPIV_OCCURRENCE
SPECIFIC_CONTROL_DEVICE	ND	ND_SPECIFIC_DEVICE<-
	ND	ND_SPECIFIC_CONTROL_DEVICE
SPECIFIC_DEVICE	ND	ND_SPECIFIC_ENGINEERING_PART<-
	ND	ND_SPECIFIC_DEVICE
SPECIFIC_DISCRETE_PART	ND	ND_SPECIFIC_ENGINEERING_PART<-
	ND	ND_SPECIFIC_DISCRETE_PART
SPECIFIC_DISTRIBUTION_PART	ND	ND_SPECIFIC_ENGINEERING_PART<-
	ND	ND_SPECIFIC_DISTRIBUTION_PART
SPECIFIC_ENGINEERING_PART	ND	ND_SPECIFIC_PRODUCT_SPIV<-
	ND	ND_SPECIFIC_ENGINEERING_PART
SPECIFIC_EQUIPMENT	ND	ND_SPECIFIC_DEVICE<-
	ND	ND_SPECIFIC_EQUIPMENT
SPECIFIC_HVAC_PART	ND	ND_DISTRIBUTION_PART<-
	NH	NH_SPECIFIC_HVAC_PART
SPECIFIC_HVAC_COMPONENT	NH	NH_SPECIFIC_HVAC_PART<-
	NH	NH_SPECIFIC_HVAC_COMPONENT
SPECIFIC_HVAC_DUCT	NH	NH_SPECIFIC_HVAC_PART<-
	NH	NH_SPECIFIC_HVAC_DUCT
SPECIFIC_HVAC_EQUIPMENT	ND	ND_SPECIFIC_EQUIPMENT<-
	NH	NH_SPECIFIC_HVAC_EQUIPMENT
SPECIFIC_HVAC_FAN_COIL	NH	NH_SPECIFIC_HVAC_EQUIPMENT<-
	NH	NH_SPECIFIC_HVAC_FAN_COIL
SPECIFIC_HVAC_HEATER	NH	NH_SPECIFIC_HVAC_EQUIPMENT<-
	NH	NH_SPECIFIC_HVAC_HEATER
SPECIFIC_HVAC_ACTIVE_FILTER	NH	NH_SPECIFIC_HVAC_EQUIPMENT<-
	NH	NH_SPECIFIC_HVAC_ACTIVE_FILTER
SPECIFIC_FASTENER	ND	ND_SPECIFIC_DISCRETE_PART<-
	ND	ND_SPECIFIC_FASTENER
SPECIFIC_INSTRUMENT	ND	ND_SPECIFIC_DEVICE<-
	ND	ND_SPECIFIC_INSTRUMENT
ZONE_OCCURRENCE	ND	ND_SPACE_SPIV_OCCURRENCE<-
	ND	ND_ZONE_OCCURRENCE

5.1.2 Configuration management

ARM ENTITY/attribute	ISO 10303 Part	AIM ENTITY/attribute
n_identifier	41	identifier
n_date_and_time	41	date_and_time
	NCM	NCM_DATE_AND_TIME
n_person_and_organization	41	person_and_organization
	NCM	NCM_PERSON_AND_ORGANIZATION
n_organization	41	organization
	NCM	NCM_ORGANIZATION
n_approval_status	41	approval_status
	NCM	NCM_APPROVAL_STATUS
CREATION/MODIFICATION/DELETION_EVENT	NCM	NCM_CREATION_MODIFICATION_DELE TION_EVENT-
CREATION/MODIFICATION/DELETION_EVENT/N_date_time	NCM	NCM_CREATION_MODIFICATION_DELE-

		TION_EVENT/N_date_time-->
	NCM	NCM_DATE_AND_TIME
CREATION/MODIFICATION/DELETION_EVENT/performed_by	NCM	NCM_CREATION_MODIFICATION_DELE-TION_EVENT/performed_by-->
	NCM	NCM_PERSON_AND_ORGANIZATION
CREATION/MODIFICATION/DELETION_EVENT/checked_by	NCM	NCM_CREATION_MODIFICATION_DELE-TION_EVENT/checked_by-->
	NCM	NCM_PERSON_AND_ORGANIZATION
CREATION/MODIFICATION/DELETION_EVENT/has_description	NCM	NCM_CREATION_MODIFICATION_DELE - TION_EVENT/has_description-->-
	41	text
CREATION/MODIFICATION/DELETION_EVENT/has_type	NCM	NCM_CREATION_MODIFICATION_DELE-TION_EVENT/has_type-->
	11	enumeration
CREATION/MODIFICATION/DELETION_EVENT/part_of	NCM	NCM_CREATION_MODIFICATION_DELE-TION_EVENT/part_of-->
	NCM	NCM_CHANGE
CREATION/MODIFICATION/DELETION_EVENT/causes_creation_modificatio n_deletion_of	NCM	NCM_CREATION_MODIFICATION_DELE-TION_EVENT/causes_creation_modification_deletion_of-->
	NCM	NCM_SHIP_PRODUCT_ITEM_VERSION
CREATION/MODIFICATION/DELETION_EVENT/uses_as_baseline	NCM	NCM_CREATION_MODIFICATION_DELE-TION_EVENT/uses_as_baseline-->
	NCM	NCM_SHIP_PRODUCT_ITEM_VERSION
PROMOTION_EVENT	NCM	NCM_PROMOTION_EVENT
PROMOTION_EVENT/event_occurred	NCM	NCM_PROMOTION_EVENT/event_occurred-->
	NCM	NCM_DATE_AND_TIME
PROMOTION_EVENT/promoted	NCM	NCM_PROMOTION_EVENT/promoted-->
	NCM	NCM_PROMOTION_OF_SPIV
PROMOTION_EVENT/has_type	NCM	NCM_PROMOTION_EVENT/has_level-->
	11	enumeration
PROMOTION_OF_SPIV	NCM	NCM_PROMOTION_OF_SPIV
PROMOTION_OF_SPIV/promotes	NCM	NCM_PROMOTION_OF_SPIV/promotes-->
	NCM	NCM_SHIP_PRODUCT_ITEM_VERSION
PROMOTION_OF_SPIV/event	NCM	NCM_PROMOTION_OF_SPIV/event-->
	NCM	NCM_PROMOTION_EVENT
CONFIGURATION_CHANGE	NCM	NCM_CONFIGURATION_CHANGE
CONFIGURATION_CHANGE/incorporates	NCM	NCM_CONFIGURATION_CHANGE/incorporates-->
	NCM	NCM_CHANGE
CONFIGURATION_CHANGE/of	NCM	NCM_CONFIGURATION_CHANGE/of-->
	NCM	NCM_CONFIGURATION_SPIV
CONFIGURATION_CHANGE/has_status	NCM	NCM_CONFIGURATION_CHANGE/has_status-->
	11	enumeration
CHANGE	NCM	NCM_CHANGE
CHANGE/change_id	NCM	NCM_CHANGE/change_id-->
	N	N_IDENTIFIER
	NCM	NCM_CHANGE
CHANGE/status	NCM	NCM_CHANGE/status-->
	NCM	NCM_CHANGE_STATUS_EVENT
CHANGE/can_be_satisfied_by	NCM	NCM_CHANGE/can_be_satisfied_by-->
	NCM	NCM_CHANGE_ALTERNATIVE
CHANGE/has_chosen	NCM	NCM_CHANGE/has_chosen-->
	NCM	NCM_CHANGE_ALTERNATIVE
CHANGE/authorizing_authority	NCM	NCM_CHANGE/authorizing_authority-->
	NCM	NCM_ORGANIZATION
CHANGE/type	NCM	NCM_CHANGE/type-->
	11	enumeration
CHANGE/organization_change_id	NCM	NCM_CHANGE/organization_change_id-->
	NCM	NCM_ORGANIZATION_CHANGE_ID
ORGANIZATION_CHANGE_ID	NCM	NCM_ORGANIZATION_CHANGE_ID
ORGANIZATION_CHANGE_ID/id	N	N_IDENTIFIER
ORGANIZATION_CHANGE_ID/organization	NCM	NCM_ORGANIZATION
CHANGE_STATUS_EVENT	NCM	NCM_CHANGE_STATUS_EVENT
CHANGE_STATUS_EVENT/occurred	NCM	NCM_CHANGE_STATUS_EVENT/occurred-->
	NCM	NCM_DATE_AND_TIME
CHANGE_STATUS_EVENT/status	NCM	NCM_CHANGE_STATUS_EVENT/status-->
	11	enumeration
CHANGE_ALTERNATIVE	NCM	NCM_CHANGE_ALTERNATIVE
CHANGE_ALTERNATIVE/change_alternative_id	NCM	NCM_CHANGE_ALTERNATIVE/change_alternative_id-->
	N	N_IDENTIFIER
CHANGE_ALTERNATIVE/has_estimated	NCM	NCM_CHANGE_ALTERNATIVE/has_estimated-->
	11	real
CHANGE_ALTERNATIVE/potentially_impacts	NCM	NCM_CHANGE_ALTERNATIVE/potentially_impacts-->-

	NCM	NCM_POTENTIAL_SPIV_CHANGE
POTENTIAL_SPIV_CHANGE	NCM	NCM_POTENTIAL_SPIV_CHANGE
POTENTIAL_SPIV_CHANGE/of_alternative	NCM	NCM_POTENTIAL_SPIV_CHANGE/of_alternative-->
	NCM	NCM_CHANGE_ALTERNATIVE
POTENTIAL_SPIV_CHANGE/of_spiv	NCM	NCM_POTENTIAL_SPIV_CHANGE/of_spiv-->
	NCM	NCM_SHIP_PRODUCT_ITEM_VERSION
COMPONENT_SPIV	NCM	NCM_SHIP_PRODUCT_ITEM_VERSION
	NCM	NCM_COMPONENT_SPIV
COMPONENT_SPIV/is_component_of	NCM	NCM_COMPONENT_SPIV/is_component_of-->
	NCM	NCM_SPIV_RELATIONSHIP
CONTEXT_SPIV	NCM	NCM_SHIP_PRODUCT_ITEM_VERSION
	NCM	NCM_CONTEXT_SPIV
CONTEXT_SPIV/is_context_for	NCM	NCM_CONTEXT_SPIV/is_context_for-->
	NCM	NCM_SPIV_RELATIONSHIP
SPIV_RELATIONSHIP	NCM	NCM_SPIV_RELATIONSHIP
SPIV_RELATIONSHIP/has_component_of	NCM	NCM_SPIV_RELATIONSHIP/has_component_of-->
	NCM	NCM_COMPONENT_SPIV
SPIV_RELATIONSHIP/has_context_of	NCM	NCM_SPIV_RELATIONSHIP/has_context_of-->
	NCM	NCM_CONTEXT_SPIV
SPIV_RELATIONSHIP/type	NCM	NCM_SPIV_RELATIONSHIP/type-->
	11	enumeration
SPIV_RELATIONSHIP/context	NCM	NCM_SPIV_RELATIONSHIP/context-->
	41	label
CONFIGURATION_SPIV	NCM	NCM_CONTEXT_SPIV
	NCM	NCM_CONFIGURATION_SPIV
CONFIGURATION_SPIV/has_owner	NCM	NCM_CONFIGURATION_SPIV/has_owner-->
	NCM	NCM_PERSON_AND_ORGANIZATION
CONFIGURATION_SPIV/is_approval_context_for	NCM	NCM_CONFIGURATION_SPIV/is_approval_context_for-->
	NCM	NCM_APPROVAL_RELATIONSHIP
APPROVAL_RELATIONSHIP	NCM	NCM_SPIV_RELATIONSHIP
	NCM	NCM_APPROVAL_RELATIONSHIP
APPROVAL_RELATIONSHIP/has_events	NCM	NCM_APPROVAL_RELATIONSHIP/has_events-->
	NCM	NCM_APPROVAL_EVENT
APPROVAL_EVENT	NCM	NCM_APPROVAL_EVENT
APPROVAL_EVENT/assigned_on	NCM	NCM_APPROVAL_EVENT/assigned_on-->
	NCM	NCM_DATE_AND_TIME
APPROVAL_EVENT/status	NCM	NCM_APPROVAL_EVENT/status-->
	NCM	NCM_APPROVAL_STATUS
OCCURRENCE_SPIV	NCM	NCM_SHIP_PRODUCT_ITEM_VERSION
	NCM	NCM_OCCURRENCE_SPIV
OCCURRENCE_SPIV/instance_of	NCM	NCM_OCCURRENCE_SPIV/instance_of-->
	NCM	NCM_SPECIFIC_SPIV
OCCURRENCE_SPIV/physically_manifested_by	NCM	NCM_OCCURRENCE_SPIV/physically_manifested_by-->
	NCM	NCM_PHYSICAL_OCCURRENCE_SPIV
OCCURRENCE_SPIV/is_applicable_to	NCM	NCM_OCCURRENCE_SPIV/is_applicable_to-->
	NCM	NCM_HULL
PHYSICAL_OCCURRENCE_SPIV	NCM	NCM_SHIP_PRODUCT_ITEM_VERSION
	NCM	NCM_PHYSICAL_OCCURRENCE_SPIV
PHYSICAL_OCCURRENCE_SPIV/uses	NCM	NCM_PHYSICAL_OCCURRENCE_SPIV/uses-->
	NCM	NCM_PHYSICAL_SPIV
PHYSICAL_OCCURRENCE_SPIV/physical_manifestation_of	NCM	NCM_PHYSICAL_OCCURRENCE_SPIV/physical_manifestation_of-->
	NCM	NCM_OCCURRENCE_SPIV
PHYSICAL_OCCURRENCE_SPIV/is_applicable_to	NCM	NCM_PHYSICAL_OCCURRENCE_SPIV/is_applicable_to-->
	NCM	NCM_HULL
HULL	NCM	NCM_HULL
HULL/has_hull_id	NCM	NCM_HULL/has_hull_id-->
	N	N_IDENTIFIER
SPECIFIC_SPIV	NCM	NCM_SHIP_PRODUCT_ITEM_VERSION
	NCM	NCM_SPECIFIC_SPIV
SPECIFIC_SPIV/instanced_at	NCM	NCM_SPECIFIC_SPIV/instanced_at-->
	NCM	NCM_OCCURRENCE_SPIV
SPECIFIC_SPIV/physically_manifested_by	NCM	NCM_SPECIFIC_SPIV/physically_manifested_by-->
	NCM	NCM_PHYSICAL_SPIV
PHYSICAL_SPIV	NCM	NCM_PHYSICAL_SPIV
PHYSICAL_SPIV/physical_manifestation_of	NCM	NCM_PHYSICAL_SPIV/physical_manifestation_of-->
	NCM	NCM_SPECIFIC_SPIV
PHYSICAL_SPIV/used_at	NCM	NCM_PHYSICAL_SPIV/used_at-->
	NCM	NCM_PHYSICAL_OCCURRENCE_SPIV

5.1.3 External reference

ARM ENTITY/attribute	ISO 10303 Part	AIM ENTITY/attribute
SHIP_PRODUCT_ITEM_VERSION/reference_definition_source	NCM	NCM_SHIP_PRODUCT_ITEM_VERSION/reference_ definition_source->
	11	enumeration
INTERNAL_SPIV	NCM	NCM_SHIP_PRODUCT_ITEM_VERSION<-
	NL	NL_INTERNAL_SPIV
EXTERNAL_SPIV	NCM	NCM_SHIP_PRODUCT_ITEM_VERSION<-
	NL	NL_EXTERNAL_SPIV
EXTERNAL_SPIV/is_defined_by	NL	NL_EXTERNAL_SPIV/is_defined_by->
	NL	N_EXTERNALLY_DEFINED_ITEM
N_EXTERNALLY_DEFINED_ITEM	41	EXTERNALLY_DEFINED_ITEM<-
	NL	N_EXTERNALLY_DEFINED_ITEM
N_EXTERNALLY_DEFINED_ITEM/has_reference_type	NL	N_EXTERNALLY_DEFINED_ITEM/has_reference_ type->
	NL	NL_EXTERNALY_DEFINED_ITEM_REFERENCE_ TYPE
N_EXTERNALLY_DEFINED_ITEM/has_shape_definition_type	NL	N_EXTERNALLY_DEFINED_ITEM/ has_shape_definition_type->
	NL	NL_EXTERNALY_DE-FINED_ITEM_ SHAPE_DEFINITION_TYPE
EXTERNALY_DEFINED_ITEM_REFERENCE_TYPE	11	enumeration
EXTERNALY_DEFINED_ITEM_SHAPE_DEFINITION_TYPE	11	enumeration

5.1.4 HVAC system

ARM ENTITY/attribute	ISO 10303 Part	AIM ENTITY/attribute
HVAC_SYSTEM_OCCURRENCE	ND	ND_ENGINEERING_SYSTEM_OCCURRENCE<-
	NH	NH_HVAC_SYSTEM_OCCURRENCE
HVAC_SYSTEM_OCCURRENCE/has_heater	NH	NH_HVAC_SYSTEM_OCCURRENCE/has_heater->
	NH	NH_HVAC_HEATER_OCCURRENCE
HVAC_SYSTEM_OCCURRENCE/has_fan	NH	NH_HVAC_SYSTEM_OCCURRENCE/has_fan->
	NH	NH_HVAC_FAN_OCCURRENCE
HVAC_SYSTEM_OCCURRENCE/has_coil	NH	NH_HVAC_SYSTEM_OCCURRENCE/has_coil->
	NH	NH_HVAC_COIL_OCCURRENCE
HVAC_SYSTEM_OCCURRENCE/has_equipment	NH	NH_HVAC_SYSTEM_OCCURRENCE/has_equipment->-
	NH	NH_HVAC_EQUIPMENT_OCCURRENCE
HVAC_SYSTEM_OCCURRENCE/connects_at	NH	NH_HVAC_SYSTEM_OCCURRENCE/connects_at->
	NH	NH_HVAC_PORT_OCCURRENCE
HVAC_SYSTEM_OCCURRENCE_DESIGN	NH	NH_HVAC_SYSTEM_OCCURRENCE
	NH	NH_HVAC_SYSTEM_OCCURRENCE_DESIGN
HVAC_SYSTEM_OCCURRENCE_DESIGN/number	NH	NH_HVAC_SYSTEM_OCCURRENCE_DESIGN/system_ number->
	41	text
HVAC_SYSTEM_OCCURRENCE_DESIGN/abbreviation	NH	NH_HVAC_SYSTEM_OCCURRENCE_DESIGN/hvac_ system_abbreviation->
	41	label
HVAC_SYSTEM_OCCURRENCE_DESIGN/diagram_number_organization_id	NH	NH_HVAC_SYSTEM_OCCURRENCE_DESIGN/diagram _number_organization_id->
	41	identifier
HVAC_SYSTEM_OCCURRENCE_DESIGN/organization_diagram_ number	NH	NH_HVAC_SYSTEM_OCCURRENCE_DESIGN/organi- zation_diagram_number->
	41	identifier
HVAC_SYSTEM_OCCURRENCE_DESIGN/design_pressure	NH	NH_HVAC_SYSTEM_OCCURRENCE_DESIGN/hvac_ system_design_pressure->
	ND	pressure_value
HVAC_SYSTEM_OCCURRENCE_DESIGN/has_condition	NH	NH_HVAC_SYSTEM_OCCURRENCE_DESIGN/has_ condition->
	ND	ND_SYSTEM_OPERATING_CONDITION
HVAC_SYSTEM_OCCURRENCE_IMPLEMENTATION	NH	NH_HVAC_SYSTEM_OCCURRENCE
	NH	NH_HVAC_SYSTEM_OCCURRENCE_IMPLEMENTA- TION
SYSTEM_OPERATING_CONDITION	ND	ND_SYSTEM_OPERATING_CONDITION
SYSTEM_OPERATING_CONDITION/id	ND	ND_SYSTEM_OPERATING_CONDITION/ system_condition_id->
	41	identifier

SYSTEM_OPERATING_CONDITION/description	ND 41	ND_SYSTEM_OPERATING_CONDITION/description->text

5.1.5 Connectivity

ARM ENTITY/attribute	ISO 10303 Part	AIM ENTITY/attribute
DISTRIBUTION_END_OCCURRENCE	ND	ND_END_SPIV_OCCURRENCE
	ND	ND_DISTRIBUTION_END_OCCURRENCE
DISTRIBUTION_INTERCONNECTION_OCCURRENCE	ND	ND_INTERFACE_SPIV_OCCURRENCE
	ND	ND_DISTRIBUTION_INTERCONNECTION_OCCUR-RENCE
DISTRIBUTION_INTERFACE_OCCURRENCE	ND	ND_INTERFACE_SPIV_OCCURRENCE
	ND	ND_DISTRIBUTION_INTERFACE_OCCURRENCE
HVAC_INTERCONNECTION_OCCURRENCE	ND	ND_DISTRIBUTION_INTERCONNECTION_OCCUR-RENCE
	NH	NH_HVAC_INTERCONNECTION_OCCURRENCE
HVAC_INTERCONNECTION_INTERFACE_OCCURRENCE	NH	NH_HVAC_INTERFACE_OCCURRENCE
	NH	NH_HVAC_INTERCONNECTION_INTERFACE_OC-CURRENCE
HVAC_INTERFACE_OCCURRENCE	ND	ND_DISTRIBUTION_INTERFACE_OCCURRENCE
	NH	NH_HVAC_INTERFACE_OCCURRENCE
HVAC_JOINT_OCCURRENCE	NH	NH_HVAC_INTERFACE_OCCURRENCE
	NH	NH_HVAC_JOINT_OCCURRENCE
HVAC_JOINT_OCCURRENCE_DESIGN	NH	NH_HVAC_JOINT_OCCURRENCE
	NH	NH_HVAC_JOINT_OCCURRENCE_DESIGN
HVAC_JOINT_OCCURRENCE_DESIGN/joint_joining_specification_id	NH	NH_HVAC_JOINT_OCCURRENCE_DESIGN/joint_joining_specification_id-->
	41	identifier
HVAC_JOINT_OCCURRENCE_DESIGN/joint_test_requirement_id	NH	NH_HVAC_JOINT_OCCURRENCE_DESIGN/joint_test_requirement_id-->
	41	identifier
HVAC_JOINT_OCCURRENCE_DESIGN/joint_inspection_requirement_id	NH	NH_HVAC_JOINT_OCCURRENCE_DESIGN/joint_inspection_requirement_id-->
	41	identifier
HVAC_JOINT_OCCURRENCE_DESIGN/hvac_joint_type	NH	NH_HVAC_JOINT_OCCURRENCE_DESIGN/hvac_joint_type-->
	41	label
HVAC_JOINT_OCCURRENCE_IMPLEMENTATION	NH	NH_HVAC_JOINT_OCCURRENCE
	NH	NH_HVAC_JOINT_OCCURRENCE_IMPLEMENTA-TION
HVAC_JOINT_OCCURRENCE_IMPLEMENTATION/has_engage-ment_distance	NH	NH_HVAC_JOINT_OCCURRENCE_IMPLEMENTA-TION/has_engagement_distance->
	ND	length_value
HVAC_JOINT_OCCURRENCE_IMPLEMENTATION/joint_fabrica-tion_requirement_id	NH	NH_HVAC_JOINT_OCCURRENCE_IMPLEMENTA-TION/joint_fabrication_require-ment_id-->
	41	identifier
HVAC_JOINT_OCCURRENCE_IMPLEMENTATION/has_joining_type	NH	NH_HVAC_JOINT_OCCURRENCE_IMPLEMENTA-TION/has_joining_type->
	NH	NH_HVAC_JOINT_JOINING_TYPE
HVAC_JOINT_OCCURRENCE_IMPLEMENTATION/has_sealant_type	NH	NH_HVAC_JOINT_OCCURRENCE_IMPLEMENTA-TION/has_sealant_type->
	NH	NH_HVAC_JOINT_SEALANT_TYPE
HVAC_JOINT_OCCURRENCE_IMPLEMENTATION/has_tightness	NH	NH_HVAC_JOINT_OCCURRENCE_IMPLEMENTA-TION/has_tightness->
	NH	NH_HVAC_JOINT_TIGHTNESS
HVAC_JOINT_JOINING_TYPE	NH	NH_HVAC_JOINT_JOINING_TYPE
HVAC_JOINT_JOINING_TYPE/has_joining_type_name	NH	NH_HVAC_JOINT_JOINING_TYPE/has_joining_type_name->
	11	enumeration
	NH	NH_HVAC_JOINT_SEALANT_TYPE
HVAC_JOINT_SEALANT_TYPE/has_sealant_type_name	NH	NH_HVAC_JOINT_JOINING_TYPE/has_sealant_type_name->
	11	enumeration
HVAC_JOINT_TIGHTNESS	NH	NH_HVAC_JOINT_TIGHTNESS
HVAC_JOINT_TIGHTNESS/has_joint_tightness_name	NH	NH_HVAC_JOINT_TIGHTNESS/has_joint_tightness_name->
	11	enumeration
HVAC_PORT_OCCURRENCE_DESIGN/has_equivalent_diameter	NH	NH_HVAC_PORT_OCCURRENCE_DESIGN/has_equivalent_diameter->

	ND	ND_LENGTH_VALUE
HVAC_PORT_OCCURRENCE_DESIGN/has_port_type	NH	NH_HVAC_PORT_OCCURRENCE_DESIGN/has_port_type->
	11	enumeration
HVAC_PORT_OCCURRENCE_IMPLEMENTATION/has_cross_section	NH	NH_HVAC_PORT_OCCURRENCE_IMPLEMENTATION/has_cross_section->
	NH	NH_HVAC_PORT_CROSS_SECTION
HVAC_PORT_CROSS_SECTION	NH	NH_HVAC_PORT_CROSS_SECTION
HVAC_PORT_CROSS_SECTION/has_id	NH	NH_HVAC_PORT_CROSS_SECTION/has_id->
	41	identifier
HVAC_PORT_CROSS_SECTION/has_type_name	NH	NH_HVAC_PORT_CROSS_SECTION/has_type_name->
	11	enumeration
NON_STANDARD_CROSS_SECTION	NH	NH_HVAC_PORT_CROSS_SECTION<-
	NH	NH_NON_STANDARD_PORT_CROSS_SECTION
SPECIFIC_HVAC_PORT	ND	ND_SPECIFIC_DISTRIBUTION_END
	NH	NH_SPECIFIC_HVAC_PORT
SPECIFIC_HVAC_PORT_DESIGN	NH	NH_SPECIFIC_HVAC_PORT<-
	NH	NH_SPECIFIC_HVAC_PORT_DESIGN
SPECIFIC_HVAC_PORT_DESIGN/has_port_type	NH	NH_SPECIFIC_HVAC_PORT_DESIGN/has_port_type
	11	enumeration
SPECIFIC_HVAC_PORT_IMPLEMENTATION	NH	NH_SPECIFIC_HVAC_PORT<-
	NH	NH_SPECIFIC_HVAC_PORT_IMPLEMENTATION
SPECIFIC_HVAC_PORT_IMPLEMENTATION/has_type_name	NH	NH_SPECIFIC_HVAC_PORT_IMPLEMENTATION/has_type_name->
	11	enumeration
SPECIFIC_HVAC_PORT_IMPLEMENTATION/has_height	NH	NH_SPECIFIC_HVAC_PORT_IMPLEMENTATION/has_height->
	ND	ND_LENGTH_VALUE
SPECIFIC_HVAC_PORT_IMPLEMENTATION/has_width	NH	NH_SPECIFIC_HVAC_PORT_IMPLEMENTATION/has_width->
	ND	ND_LENGTH_VALUE
SPECIFIC_HVAC_PORT_IMPLEMENTATION/has_corner_radius	NH	NH_SPECIFIC_HVAC_PORT_IMPLEMENTATION/has_corner_radius->
	ND	ND_LENGTH_VALUE
STANDARD_CROSS_SECTION	NH	NH_HVAC_PORT_CROSS_SECTION<-
	NH	NH_STANDARD_PORT_CROSS_SECTION
STANDARD_CROSS_SECTION/has_height	NH	NH_STANDARD_PORT_CROSS_SECTION/has_height->
	ND	ND_LENGTH_VALUE
STANDARD_CROSS_SECTION/has_width	NH	NH_STANDARD_PORT_CROSS_SECTION/has_width->
	ND	ND_LENGTH_VALUE
STANDARD_CROSS_SECTION/has_corner_radius	NH	NH_STANDARD_PORT_CROSS_SECTION/has_corner_radius->
	ND	ND_LENGTH_VALUE

5.1.6 Flow

ARM ENTITY/attribute	ISO 10303 Part	AIM ENTITY/attribute
EQUIPMENT_SYSTEM_OPERATING_CONDITION/flow	ND	ND_EQUIPMENT_SYSTEM_OPERATING_CONDITION/flow->
	ND	ND_MEDIUM_FLOW
MEDIUM_FLOW	ND	ND_MEDIUM_FLOW
MEDIUM_FLOW/id	ND	ND_MEDIUM_FLOW/id->
	41	identifier
MEDIUM_FLOW/medium	ND	ND_MEDIUM_FLOW/medium->
	41	text
MEDIUM_FLOW/flow_rate->	ND	flow_rate_value
MEDIUM_FLOW/medium_flow_condition	ND	ND_MEDIUM_FLOW/medium_flow_condition->
	41	text
MEDIUM_LOSS	ND	ND_MEDIUM_LOSS
MEDIUM_LOSS/loss_for	ND	ND_MEDIUM_LOSS/loss_for->
	ND	ND_MEDIUM_FLOW
MEDIUM_LOSS/fixed_loss-gain	ND	ND_MEDIUM_LOSS/fixed_loss-gain->
	ND	pressure_value
MEDIUM_LOSS/medium_loss_coefficient	ND	ND_MEDIUM_LOSS/medium_loss_coefficient->
	41	real
HVAC_PART_OCCURRENCE_DESIGN	NH	NH_HVAC_PART_OCCURRENCE<-

	NH	NH_HVAC_PART_OCCURRENCE_DESIGN
HVAC_PART_OCCURRENCE_DESIGN/has_loss	NH	NH_HVAC_PART_OCCURRENCE_DESIGN/has_loss->
	ND	pressure_value
HVAC_PART_OCCURRENCE_DESIGN/has_loss_per_foot	NH	NH_HVAC_PART_OCCURRENCE_DESIGN/has_loss_per_foot->
	ND	pressure_value
HVAC_PART_OCCURRENCE_DESIGN/has_velocity	NH	NH_HVAC_PART_OCCURRENCE_DESIGN/has_velocity->
	ND	pressure_value
HVAC_PORT_OCCURRENCE	ND	ND_DISTRIBUTION_END_OCCURRENCE<-
	NH	NH_HVAC_PORT_OCCURRENCE
HVAC_PORT_OCCURRENCE_DESIGN	NH	NH_HVAC_PORT_OCCURRENCE<-
	NH	NH_HVAC_PORT_OCCURRENCE_DESIGN
HVAC_PORT_OCCURRENCE_DESIGN/has_states	NH	NH_HVAC_PORT_OCCURRENCE_DESIGN/ has_states->
	NH	NH_HVAC_PORT_STATE
HVAC_PORT_OCCURRENCE_IMPLEMENTATION	NH	NH_HVAC_PORT_OCCURRENCE<-
	NH	NH_HVAC_PORT_OCCURRENCE_IMPLEMENTATION
HVAC_PORT_OCCURRENCE_IMPLEMENTATION/has_cross_section	NH	NH_HVAC_PORT_OCCURRENCE_IMPLEMENTATION/ has_cross_section->
	NH	NH_HVAC_PORT_CROSS_SECTION
HVAC_PORT_STATE	NH	NH_HVAC_PORT_STATE
HVAC_PORT_STATE/id	NH	NH_HVAC_PORT_STATE/hvac_port_state_id->
	41	identifier
HVAC_PORT_STATE/temperature	NH	NH_HVAC_PORT_STATE/hvac_port_state_temperature->
	ND	temperature_value
HVAC_PORT_STATE/pressure	NH	NH_HVAC_PORT_STATE/hvac_port_state_pressure->
	ND	pressure_value
HVAC_PORT_STATE/flow_rate	NH	NH_HVAC_PORT_STATE/flow_rate->
	ND	flow_rate_value
HVAC_PORT_STATE/flow_direction	NH	NH_HVAC_PORT_STATE/flow_direction->
	11	enumeration
HVAC_PORT_STATE/of_system_operating_condition	NH	NH_HVAC_PORT_STATE/of_system_operating_condition->
	ND	ND_SYSTEM_OPERATING_CONDITION
HVAC_SECTION_OCCURRENCE	NH	NH_HVAC_INTERCONNECTION_OCCURRENCE<-
	NH	NH_HVAC_SECTION_OCCURRENCE
HVAC_SECTION_OCCURRENCE_DESIGN	NH	NH_HVAC_SECTION_OCCURRENCE<-
	NH	NH_HVAC_SECTION_OCCURRENCE_DESIGN
HVAC_SECTION_OCCURRENCE_DESIGN/has_states	NH	NH_HVAC_SECTION_OCCURRENCE_DESIGN/has_ states->
	NH	NH_HVAC_SECTION_STATE
HVAC_SECTION_OCCURRENCE_IMPLEMENTATION	NH	NH_HVAC_SECTION_OCCURRENCE
	NH	NH_HVAC_SECTION_OCCURRENCE_IMPLEMENTA-TION
HVAC_SECTION_STATE	NH	NH_HVAC_SECTION_STATE
HVAC_SECTION_STATE/has_section_loss	NH	NH_HVAC_SECTION_STATE/has_section_loss->
	ND	pressure_value
HVAC_SECTION_STATE/hvac_section_available	NH	NH_HVAC_SECTION_STATE/hvac_section_available->
	ND	pressure_value
HVAC_SECTION_STATE/flow_rate	NH	NH_HVAC_SECTION_STATE/flow_rate->
	ND	flow_rate_value
HVAC_SECTION_STATE/id	NH	NH_HVAC_SECTION_STATE/hvac_section_state_id->
	41	identifier
HVAC_SECTION_STATE/system_operating_condition	NH	NH_HVAC_SECTION_STATE/system_operating_condition->
	ND	ND_SYSTEM_OPERATING_CONDITION
HVAC_SECTION_STATE/flows_from	NH	NH_HVAC_SECTION_STATE/flows_from->
	NH	NH_HVAC_SECTION_STATE_FLOW
HVAC_SECTION_STATE/flows_to	NH	NH_HVAC_SECTION_STATE/flows_to->
	NH	NH_HVAC_SECTION_STATE_FLOW
HVAC_FLOW_CONTROL_DEVICE_OPERATING_CONDITION/of_fcd	NH	NH_HVAC_FLOW_CONTROL_DEVICE_OPERATING_ CONDITION/of_fcd->
	NH	NH_HVAC_FLOW_CONTROL_DEVICE_OCCURRENCE
HVAC_FLOW_CONTROL_DEVICE_OPERATING_CONDITION/of_condi-tion	NH	NH_HVAC_FLOW_CONTROL_DEVICE_OPERATING_ CONDITION/of_condition->
	ND	ND_SYSTEM_OPERATING_CONDITION
HVAC_FLOW_CONTROL_DEVICE_OPERATING_CONDITION/has_clo-sure_condition	NH	NH_HVAC_FLOW_CONTROL_DEVICE_OPERATING_ CONDITION/has_closure_condition->
	11	enumeration
SPECIFIC_HVAC_COMPONENT_DESIGN	NH	NH_SPECIFIC_HVAC_COMPONENT<-
	NH	NH_SPECIFIC_HVAC_COMPONENT_DESIGN
SPECIFIC_HVAC_COMPONENT_DESIGN/has_pressure_loss_co-efficient	NH	NH_SPECIFIC_HVAC_COMPONENT_DESIGN/has_pressur e_loss_coefficient->
	11	real

SPECIFIC_HVAC_COMPONENT_DESIGN/has_pressure_loss	NH	NH_SPECIFIC_HVAC_COMPONENT_DESIGN/has_pressure_loss->
	ND	pressure_value
SPECIFIC_HVAC_PORT	ND	ND_SPECIFIC_DISTRIBUTION_END<-
	NH	NH_SPECIFIC_HVAC_PORT
SPECIFIC_HVAC_PORT_DESIGN	NH	NH_SPECIFIC_HVAC_PORT<-
	NH	NH_SPECIFIC_HVAC_PORT_DESIGN
SPECIFIC_HVAC_PORT_DESIGN/type	NH	NH_SPECIFIC_HVAC_PORT_DESIGN/hvac_port_type->
	11	enumeration
SPECIFIC_HVAC_PORT_IMPLEMENTATION	NH	NH_SPECIFIC_HVAC_PORT<-
	NH	NH_SPECIFIC_HVAC_PORT_IMPLEMENTATION
HVAC_FLOW_CONTROL_DEVICE_OPERATING_CONDITION/closure_condi-tion	NH	NH_HVAC_FLOW_CONTROL_DEVICE_OPERATING_CONDITION/closure_condition->
	11	enumeration

5.1.7 Heating and cooling

ARM ENTITY/attribute	ISO 10303 Part	AIM ENTITY/attribute
COMPARTMENT_BOUNDARY	ND	ND_SPACE_END_OCCURRENCE<-
	ND	ND_COMPARTMENT_BOUNDARY
COMPARTMENT_BOUNDARY/has_side	ND	ND_COMPARTMENT_BOUNDARY/has_side->
	11	enumeration
COMPARTMENT_BOUNDARY/has_height	ND	ND_COMPARTMENT_BOUNDARY/has_height->
	ND	ND_length_value
COMPARTMENT_BOUNDARY/has_width	ND	ND_COMPARTMENT_BOUNDARY/has_width->
	ND	ND_length_value
COMPARTMENT_BOUNDARY/has_insulation_type	ND	ND_COMPARTMENT_BOUNDARY/has_insula-tion_type->
	41	text
COMPARTMENT_BOUNDARY/connected_by	ND	ND_COMPARTMENT_BOUNDARY/connected_by->
	ND	ND_COMPARTMENT_INTERFACE
COMPARTMENT_CONDITION	NH	NH_COMPARTMENT_CONDITION
COMPARTMENT_CONDITION/has_design_temperature	ND	ND_COMPARTMENT_CONDITION/has_design_tem-perature->
	ND	ND_temperature_value
COMPARTMENT_CONDITION/has_design_relative_humidity	ND	ND_COMPARTMENT_CONDITION/has_design_rela-tive_humidity->
	ND	ND_relative_humidity_value
	NH	NH_COMPARTMENT_CONDITION
COMPARTMENT_EXTERIOR_BOUNDARY	ND	ND_COMPARTMENT_BOUNDARY<-
	NH	NH_COMPARTMENT_EXTERIOR_BOUNDARY
COMPARTMENT_INTERFACE	ND	ND_INTERFACE_SPIV_OCCURRENCE
	ND	ND_COMPARTMENT_INTERFACE
COMPARTMENT_OCCURRENCE	ND	ND_SPACE_SPIV_OCCURRENCE<-
	ND	ND_COMPARTMENT_OCCURRENCE
COMPARTMENT_OCCURRENCE/of_cps_zone	ND	ND_COMPARTMENT_OCCURRENCE/of_cps_zone->
	ND	ND_CPS_ZONE
COMPARTMENT_OCCURRENCE/has_light_level	ND	ND_COMPARTMENT_OCCURRENCE/has_light_level->
	ND	ND_light_intensity_value
COMPARTMENT_OCCURRENCE/has_noise_level	ND	ND_COMPARTMENT_OCCURRENCE/has_noise_level->
	ND	ND_noise_value
COMPARTMENT_OCCURRENCE/has_limiting	ND	ND_COMPARTMENT_OCCURRENCE/has_limiting->
	ND	ND_temperature_value
COMPARTMENT_OCCURRENCE/has_assumed	ND	ND_COMPARTMENT_OCCURRENCE/has_assumed->
	ND	ND_temperature_value
COMPARTMENT_OCCURRENCE/has_additional_replenishment_requirement	ND	ND_COMPARTMENT_OCCURRENCE/has_additional_re-plenishment_require-ment->
	ND	ND_MEDIUM_FLOW
COMPARTMENT_OCCURRENCE/has_rate_of_change	ND	ND_COMPARTMENT_OCCURRENCE/has_rate_of_change->
	ND	ND_MEDIUM_FLOW
COMPARTMENT_OCCURRENCE/has_required	ND	ND_COMPARTMENT_OCCURRENCE/has_required->
	ND	ND_MEDIUM_FLOW
COMPARTMENT_OCCURRENCE/has_volume	ND	ND_COMPARTMENT_OCCURRENCE/has_volume->
	ND	ND_volume_value
COMPARTMENT_OCCURRENCE/has_total	ND	ND_COMPARTMENT_OCCURRENCE/has_total->
	ND	ND_heat_rate_value
COMPARTMENT_OCCURRENCE/has_compartment_number	ND	ND_COMPARTMENT_OCCURRENCE/ has_compartment_number->

	41	text
COMPARTMENT_OCCURRENCE/has_compartment_name	ND	ND_COMPARTMENT_OCCURRENCE/has_compartment_name->
	41	text
COMPARTMENT_OCCURRENCE/has_space_type	ND	ND_COMPARTMENT_OCCURRENCE/ has_space_type->
	41	text
COMPARTMENT_OCCURRENCE/has_compartment_number_of_personnel	ND	ND_COMPARTMENT_OCCURRENCE/has_compartment_number_of_personnel->
	11	integer
COMPARTMENT_OCCURRENCE/has_role_as	ND	ND_COMPARTMENT_OCCURRENCE/has_role_as->
	NH	NH_HVAC_LOAD_ITEM
COMPARTMENT_OCCURRENCE/has_conditions	ND	ND_COMPARTMENT_OCCURRENCE/ has_conditions->
	NH	NH_COMPARTMENT_CONDITION
EQUIPMENT_SYSTEM_OPERATING_CONDITION	ND	ND_EQUIPMENT_SYSTEM_OPERATING_CONDITION
EQUIPMENT_SYSTEM_OPERATING_CONDITION/heat_dissipation_to_air	ND	ND_EQUIPMENT_OPERATING_CONDITION/heat_dissipation_to_air->
	ND	heat_rate_value
EQUIPMENT_SYSTEM_OPERATING_CONDITION/heat_dissipation_to_FW	ND	ND_EQUIPMENT_SYSTEM_OPERATING_CONDITION/heat_dissipation_to_FW->
	ND	heat_rate_value
EQUIPMENT_SYSTEM_OPERATING_CONDITION/heat_dissipation_to_SW	ND	ND_EQUIPMENT_SYSTEM_OPERATING_CONDITION/heat_dissipation_to_SW->
	ND	heat_rate_value
HVAC_LOAD_ANALYSIS_CASE	NH	NH_HVAC_LOAD_ANALYSIS_CASE
HVAC_LOAD_ANALYSIS_CASE/has_id	NH	NH_HVAC_LOAD_ANALYSIS_CASE/has_id->
	41	identifier
HVAC_LOAD_ITEM	NH	NH_HVAC_LOAD_ITEM
HVAC_LOAD_ITEM/is_instance_of	NH	NH_HVAC_LOAD_ITEM/is_instance_of->
	ND	ND_COMPARTMENT_OCCURRENCE
HVAC_LOAD_ITEM/is_instance_of	NH	NH_HVAC_LOAD_ITEM/is_instance_of->
	ND	ND_EQUIPMENT_OCCURRENCE
HVAC_LOAD_ITEM/served_by	NH	NH_HVAC_LOAD_ITEM/served_by->
	NH	NH_HVAC_SYSTEM_LOAD_OCCURRENCE
HVAC_PORT_LOAD_OCCURRENCE	NH	NH_HVAC_PORT_LOAD_OCCURRENCE
HVAC_PORT_LOAD_OCCURRENCE/of_port	NH	NH_HVAC_PORT_LOAD_OCCURRENCE/of_port->
	NH	NH_HVAC_PORT_OCCURRENCE
HVAC_PORT_LOAD_OCCURRENCE/of_load	NH	NH_HVAC_PORT_LOAD_OCCURRENCE/of_load->
	NH	NH_HVAC_LOAD_ITEM
HVAC_SYSTEM_LOAD_OCCURRENCE	NH	NH_HVAC_SYSTEM_LOAD_OCCURRENCE
HVAC_SYSTEM_LOAD_OCCURRENCE/serves	NH	NH_HVAC_SYSTEM_LOAD_OCCURRENCE/serves->
	NH	NH_HVAC_LOAD_ITEM
HVAC_SYSTEM_LOAD_OCCURRENCE/of_system	NH	NH_HVAC_SYSTEM_LOAD_OCCURRENCE/ of_system->
	NH	NH_HVAC_SYSTEM_OCCURRENCE
HVAC_SYSTEM_LOAD_OCCURRENCE/has_supply_type	NH	NH_HVAC_SYSTEM_LOAD_OCCURRENCE/has_supply_type->
	41	text
HVAC_SYSTEM_LOAD_OCCURRENCE/has_exhaust_return_type	NH	NH_HVAC_SYSTEM_LOAD_OCCURRENCE/has_exhaust_return_type->
	41	text
HVAC_SYSTEM_LOAD_OCCURRENCE/has_closure_dc_class	NH	NH_HVAC_SYSTEM_LOAD_OCCURRENCE/has_closure_dc_class->
	11	enumeration
HVAC_SYSTEM_LOAD_OCCURRENCE/has_space_treatement_type	NH	NH_HVAC_SYSTEM_LOAD_OCCURRENCE/has_space_treatment_type->
	41	text
HVAC_SYSTEM_LOAD_OCCURRENCE/has_system_dc_class	NH	NH_HVAC_SYSTEM_LOAD_OCCURRENCE/has_system_dc_class->
	11	enumeration
HVAC_SYSTEM_LOAD_OCCURRENCE/has_equipment_use_factor	NH	NH_HVAC_SYSTEM_LOAD_OCCURRENCE/has_equipment_use_factor->
	11	real
HVAC_SYSTEM_LOAD_OCCURRENCE/has_equipment_efficiency	NH	NH_HVAC_SYSTEM_LOAD_OCCURRENCE/has_equipment_efficiency->
	11	real
HVAC_SYSTEM_LOAD_OCCURRENCE/of_case	NH	NH_HVAC_SYSTEM_LOAD_OCCURRENCE/of_case->
	NH	NH_HVAC_LOAD_ANALYSIS_CASE

5.1.8 Testing

ARM ENTITY/attribute	ISO 10303 Part	AIM ENTITY/attribute

AIRBORNE_NOISE_HTE	NH	NH_HVAC_TEST_ELEMENT<-
	NH	NH_AIRBORNE_NOISE_THE
AIRBORNE_NOISE_HTE/tests	NH	NH_AIRBORNE_NOISE_HTE/tests->
	ND	ND_COMPARTMENT_OCCURRENCE
AIR_CONDITIONING_LOAD_HTE	NH	NH_HVAC_TEST_ELEMENT<-
	NH	NH_AIR_CONDITIONING_LOAD_HTE
AIR_CONDITIONING_LOAD_HTE/tests	NH	NH_AIR_CONDITIONING_LOAD_HTE/tests->
	NH	NH_AIR_CONDITIONING_PLANT_UNIT_OCCUR-RENCE
AIR_CONDITIONING_PLANT_UNIT_OCCURRENCE	ND	ND_EQUIPMENT_OCCURRENCE<-
	NH	NH_AIR_CONDITIONING_PLANT_UNIT_OCCUR-RENCE
AIR_CONDITIONING_PLANT_UNIT_OCCURRENCE/supplies	NH	NH_AIR_CONDITIONING_PLANT_UNIT_OCCUR-RENCE/supplies->
	NH	NH_HVAC_COIL_OCCURRENCE
CPS_ZONE_OCCURRENCE	ND	ND_SPACE_SPIV_OCCURRENCE<-
	NH	NH_CPS_ZONE_OCCURRENCE
CPS_ZONE_OCCURRENCE/has_name	NH	NH_CPS_ZONE_OCCURRENCE/has_name->
	41	text
CPS_ZONE_OCCURRENCE/has_protection_level	NH	NH_CPS_ZONE_OCCURRENCE/has_protection level->
	11	enumeration
HVAC_TEST	NH	NH_HVAC_TEST
HVAC_TEST/test_memo_number	NH	NH_HVAC_TEST/test_memo_number->
	41	identifier
HVAC_TEST/test_memo_title	NH	NH_HVAC_TEST/test_memo_title->
	41	text
HVAC_TEST/test_memo_revision	NH	NH_HVAC_TEST/test_memo_revision->
	41	identifier
HVAC_TEST_ELEMENT	NH	NH_HVAC_TEST_ELEMENT
HVAC_TEST_ELEMENT/has_id	NH	NH_HVAC_TEST_ELEMENT/hvac_test_ele-ment_id->
	41	identifier
HVAC_TEST_ELEMENT/of_hvac_test	NH	NH_HVAC_TEST_ELEMENT/of_hvac_test->
	NH	NH_HVAC_TEST
HVAC_TEST_ELEMENT/requires_use_of	NH	NH_HVAC_TEST_ELEMENT/requires_use_of->
	ND	ND_SPECIFIC_INSTRUMENT
PRESSURE_ZONE_INTEGRITY_the	NH	NH_HVAC_TEST_ELEMENT<-
	NH	NH_PRESSURE_ZONE_INTEGRITY_HTE
PRESSURE_ZONE_INTEGRITY_HTE/tests	NH	NH_PRESSURE_ZONE_INTEGRITY_HTE/tests
	NH	NH_CPS_ZONE_OCCURRENCE
SYSTEM_OPERATIONAL_COMPONENTS_HTE	NH	NH_HVAC_TEST_ELEMENT<-
	NH	NH_SYSTEM_OPERATIONAL_COMPONENTS_HTE
SYSTEM_OPERATIONAL_COMPONENTS_HTE/has_components	NH	NH_SYSTEM_OPERATIONAL_COMPONENTS_HTE /has_components->
	ND	ND_ENGINEERING_PART_OCCURRENCE
SYSTEM_PERFORMANCE_AND_BALANCE_HTE	NH	NH_HVAC_TEST_ELEMENT<-
	NH	NH_SYSTEM_PERFORMANCE_AND_BALANCE_HTE
SYSTEM_PERFORMANCE_AND_BALANCE_HTE/tests	NH	NH_SYSTEM_PERFORMANCE_AND_BALANCE_HTE/tests->
	NH	NH_HVAC_SYSTEM_OCCURRENCE
WATERTIGHT_INTEGRITY_HTE	NH	NH_HVAC_TEST_ELEMENT<-
	NH	NH_WATERTIGHT_INTEGRITY_HTE
WATERTIGHT_INTEGRITY_HTE/tests	NH	NH_WATERTIGHT_INTEGRITY_HTE/tests->
	NH	NH_HVAC_PART_OCCURRENCE<-
	NH	NH_HVAC_COMPONENT_OCCURRENCE<-
	NH	NH_HVAC_DEVICE_OCCURRENCE<-
	NH	NH_HVAC_FLOW_CONTROL_DEVICE_OCCUR-RENCE

5.1.9 Bill of material

ARM ENTITY/attribute	ISO 10303 Part	AIM ENTITY/attribute
ACCESS_COVER	NH	NH_HVAC_COMPONENT_OCCURRENCE<-
	NH	NH_ACCESS_COVER
ACCESS_OPENING	NH	NH_ACCESS_OPENING
ACCESS_OPENING/is_in	NH	NH_ACCESS_OPENING/is_in->
	NH	NH_HVAC_PART_OCCURRENCE

ACCESS_OPENING/has_id	NH	NH_ACCESS_OPENING/has_id->
	41	identifier
ACCESS_OPENING/has_cover	NH	NH_ACCESS_OPENING/has_cover->
	NH	NH_ACCESS_COVER_OCCURRENCE
ACCESS_OPENING/has_shape	NH	NH_ACCESS_OPENING/has_shape->
	NH	NH_ACCESS_OPENING_SHAPE_REPRESENTATION
DUCT_COIL_OCCURRENCE	NH	NH_HVAC_COIL_OCCURRENCE<-
	NH	NH_DUCT_COIL_OCCURRENCE
DUCT_HEATER_OCCURRENCE	NH	NH_HVAC_HEATER_OCCURRENCE<-
	NH	NH_DUCT_HEATER_OCCURRENCE
DUCT_HEATER_OCCURRENCE/has_humidistat_required	NH	NH_DUCT_HEATER_OCCURRENCE/has_humidistat_ required->
	11	boolean
DUCT_HEATER_OCCURRENCE/has_use	NH	NH_DUCT_HEATER_OCCURRENCE/has_use->
	11	enumeration
DUCT_SEAM	NH	NH_DUCT_SEAM
DUCT_SEAM/id	NH	NH_DUCT_SEAM/id->
	41	identifier
DUCT_SEAM/type	NH	NH_DUCT_SEAM/type->
	11	enumeration
ELECTRICAL_DUCT_HEATER_OCCURRENCE	NH	NH_DUCT_HEATER_OCCURRENCE<-
	NH	NH_ELECTRICAL_DUCT_HEATER_OCCURRENCE
ELECTRICAL_DUCT_HEATER_OCCURRENCE/has_reqd_output	NH	NH_ELECTRICAL_DUCT_HEATER_OCCURENCE/has_reqd _output->
	ND	power_value
ENGINEERING_PART_IDENTIFIER	ND	ND_ENGINEERING_PART_IDENTIFIER
ENGINEERING_PART_IDENTIFIER/part_number_organization_id	ND	ND_ENGINEERING_PART_IDENTIFIER/part_number_organ ization_id->
	41	identifier
ENGINEERING_PART_IDENTIFIER/organization_part_number	ND	ND_ENGINEERING_PART_IDENTIFIER/organization_ part_number->
	41	identifier
ENGINEERING_PART_OCCURRENCE_DESIGN	ND	ND_ENGINEERING_PART_OCCURRENCE
	ND	ND_ENGINEERING_PART_OCCURRENCE_DESIGN
ENGINEERING_PART_OCCURRENCE_DESIGN/functional_group_ code	ND	ND_ENGINEERING_PART_OCCURRENCE_DESIGN/ functional_group_code->
	11	integer
ENGINEERING_PART_OCCURRENCE_DESIGN/service	ND	ND_ENGINEERING_PART_OCCURRENCE_DESIGN/ service->
	41	text
ENGINEERING_PART_OCCURRENCE_DESIGN/location_description	ND	ND_ENGINEERING_PART_OCCURRENCE_DESIGN/ location_description->
	41	text
ENGINEERING_PART_OCCURRENCE_DESIGN/required_shock_class	ND	ND_ENGINEERING_PART_OCCURRENCE_DESIGN/ required_shock_class->
	41	text
ENGINEERING_PART_OCCURRENCE_DESIGN/maximum_allowable_weight	ND	ND_ENGINEERING_PART_OCCURRENCE_DESIGN/ maximum_allowable weight->
	ND	weight_value
ENGINEERING_PART_OCCURRENCE_DESIGN/drawing_number_ organization_id	ND	ND_ENGINEERING_PART_OCCURRENCE_DESIGN/ drawing_number_organization_id->
	41	identifier
ENGINEERING_PART_OCCURRENCE_DESIGN/organization_drawing_numbe r	ND	ND_ENGINEERING_PART_OCCURRENCE_DESIGN/ organization_drawing number->
	41	identifier
ENGINEERING_PART_OCCURRENCE_DESIGN/organization_drawing_find_n umber	ND	ND_ENGINEERING_PART_OCCURRENCE_DESIGN/ organization_drawing_find_number->
	41	identifier
ENGINEERING_PART_OCCURRENCE_IMPLEMENTATION	ND	ND_ENGINEERING_PART_OCCURRENCE<-
	ND	ND_ENGINEERING_PART_OCCURRENCE_IMPLE-MENTATION
EQUIPMENT_APPLICABLE_SPECIFICATIONS	ND	ND_EQUIPMENT_APPLICABLE_SPECIFICATIONS
EQUIPMENT_APPLICABLE_SPECIFICATIONS/specification_id	ND	ND_EQUIPMENT_APPLICABLE_SPECIFICATIONS/ specification_id->
	41	identifier
EQUIPMENT-EQUIPMENT_INTERCONNECTION_OCCURRENCE	ND	ND_DISTRIBUTION_INTERFACE_OCCURRENCE<-
	ND	ND_EQUIPMENT-EQUIPMENT_INTERCONNECTION_OCCURRENCE
EQUIPMENT_FIXED_MOUNTING_DATA	ND	ND_EQUIPMENT_MOUNTING_DATA<-
	ND	ND_EQUIPMENT_FIXED_MOUNTING_DATA
EQUIPMENT_FIXED_MOUNTING_DATA/fixed_mount_type	ND	ND_EQUIPMENT_FIXED_MOUNTING_DATA/fixed_ mount_type->

	41	text
EQUIPMENT_FIXED_MOUNTING_DATA/mounting_surface_thick-ness	ND	ND_EQUIPMENT_FIXED_MOUNTING_DATA/mounting_surface_thickness->
	ND	length_value
EQUIPMENT_INSTALLATION_INSTRUCTION	ND	ND_EQUIPMENT_INSTALLATION_INSTRUCTION
EQUIPMENT_INSTALLATION_INSTRUCTION/id	ND	ND_EQUIPMENT_INSTALLATION_INSTRUCTION/ installation_instruction_id->
	41	identifier
EQUIPMENT_MOUNTING_DATA	ND	ND_EQUIPMENT_MOUNTING_DATA
EQUIPMENT_MOUNTING_DATA/equipment_mounting_data_ID	ND	ND_EQUIPMENT_MOUNTING_DATA/equipment_mounting_data_ID->
	41	identifier
EQUIPMENT_OCCURRENCE_DESIGN/equipment_applicable_specifications	ND	ND_EQUIPMENT_APPLICABLE_SPECIFICATIONS
EQUIPMENT_OCCURRENCE_DESIGN/system_conformance_specification_id	ND	ND_EQUIPMENT_OCCURRENCE_DESIGN/system_conformance_specification_id->
	41	identifier
EQUIPMENT_OCCURRENCE_DESIGN/design_pressure	ND	ND_EQUIPMENT_OCCURRENCE_DESIGN/design_ pressure->
	ND	pressure_value
EQUIPMENT_OCCURRENCE_DESIGN/design_temperature	ND	ND_EQUIPMENT_OCCURRENCE_DESIGN/design_temperature->
	ND	temperature_value
EQUIPMENT_OCCURRENCE_DESIGN/name	ND	ND_EQUIPMENT_OCCURRENCE_DESIGN/equipment_name->
	41	label
EQUIPMENT_OCCURRENCE_DESIGN/required_insulation_type	ND	ND_EQUIPMENT_OCCURRENCE_DESIGN/ required_insulation_type->
	41	label
EQUIPMENT_OCCURRENCE_DESIGN/required_insulation_thick-ness	ND	ND_EQUIPMENT_OCCURRENCE_DESIGN/required_ insulation_thickness->
	ND	length_value
EQUIPMENT_OPERATING_CONDITION	ND	ND_EQUIPMENT_OPERATING_CONDITION
EQUIPMENT_OPERATING_CONDITION/vibration_amplitude	ND	ND_EQUIPMENT_OPERATING_CONDITION/vibration_amplitude->
	ND	length_value
EQUIPMENT_OPERATING_CONDITION/vibration_frequency	ND	ND_EQUIPMENT_OPERATING_CONDITION/vibration_frequency->
	ND	frequency_value
	ND	ND_frequency_value
EQUIPMENT_OPERATING_CONDITION/id	ND	ND_EQUIPMENT_OPERATING_CONDITION/ eq_operating_condition_id->
	41	identifier
EQUIPMENT_REQUIRED_TEST	ND	ND_EQUIPMENT_REQUIRED_TEST
EQUIPMENT_REQUIRED_TEST/id	ND	ND_EQUIPMENT_REQUIRED_TEST/test_id->
	41	identifier
EQUIPMENT_RESILIENT_MOUNT_DATA	ND	ND_EQUIPMENT_MOUNTING_DATA
	ND	ND_EQUIPMENT_RESILIENT_MOUNT_DATA
EQUIPMENT_RESILIENT_MOUNT_DATA/specification_id	ND	ND_EQUIPMENT_RESILIENT_MOUNT_DATA/resilient_specification_id->
	41	identifier
EQUIPMENT_REMOVAL_ROUTE_INSTRUCTION	ND	ND_EQUIPMENT_REMOVAL_ROUTE_INSTRUCTION->
	41	text
	ND	ND_EQUIPMENT_REMOVAL_ROUTE_IN-STRUCTION
EQUIPMENT_REMOVAL_ROUTE_INSTRUCTION/id	ND	ND_EQUIPMENT_REMOVAL_ROUTE_INSTRUCTION/ removal_route_instruction_id->
	41	identifier
EQUIPMENT_SHOCK_MOVEMENT_DIRECTION	ND	ND_EQUIPMENT_SHOCK_MOVEMENT_DIRECTION
EQUIPMENT_SHOCK_MOVEMENT_DIRECTION/inertia	ND	ND_EQUIPMENT_SHOCK_MOVEMENT_DIRECTION/ inertia->
	ND	inertia_value
EQUIPMENT_SHOCK_MOVEMENT_DIRECTION/product_of_inertia	ND	ND_EQUIPMENT_SHOCK_MOVEMENT_DIRECTION/ product_of_inertia->
	ND	product_of_inertia_value
EQUIPMENT_SHOCK_MOVEMENT_DIRECTION/id	ND	ND_EQUIPMENT_SHOCK_MOVEMENT_DIRECTION/ shock_movement_direc-tion_id->
	41	identifier
EQUIPMENT_SHOCK_MOVEMENT_DIRECTION/shock_movement	ND	ND_EQUIPMENT_SHOCK_MOVEMENT_DIRECTION/ shock_movement->
	42	vector_with_magnitude
EQUIPMENT_SYSTEM_OPERATING_CONDITION	ND	ND_EQUIPMENT_SYSTEM_OPERATING_CONDITION
EQUIPMENT_SYSTEM_OPERATING_CONDITION/has_id	ND	ND_EQUIPMENT_SYSTEM_OPERATING_CONDITION/has_id->

	41	identifier
EQUIPMENT_SYSTEM_OPERATING_CONDITION/has_flow	ND	ND_EQUIPMENT_SYSTEM_OPERATING_CONDITION/has_flow->
	ND	ND_MEDIUM_FLOW
FAN_OCCURRENCE	NH	NH_HVAC_FAN_OCCURRENCE<-
	NH	NH_FAN_OCCURRENCE
GRAVITY_COIL_OCCURRENCE	NH	NH_HVAC_COIL_OCCURRENCE<-
	NH	NH_GRAVITY_COIL_OCCURRENCE
HVAC_ACTIVE_FILTER_OCCURRENCE	NH	NH_HVAC_EQUIPMENT_OCCURRENCE<-
	NH	NH_HVAC_ACTIVE_FILTER_OCCURRENCE
HVAC_ACTIVE_FILTER_OCCURRENCE/has_esp_number	NH	NH_HVAC_ACTIVE_FILTER_OCCURRENCE/has_esp_number->
	11	integer
HVAC_ACTIVE_FILTER_OCCURRENCE/has_esp_required	NH	NH_HVAC_ACTIVE_FILTER_OCCURRENCE/has_esp_required->
	ND	power_value
HVAC_DUCT_OCCURRENCE	NH	NH_HVAC_PART_OCCURRENCE<-
	NH	NH_HVAC_DUCT_OCCURRENCE
HVAC_DUCT_OCCURRENCE/has_branch	NH	NH_HVAC_DUCT_OCCURRENCE/has_branch->
	NH	NH_HVAC_PORT_OCCURRENCE
HVAC_DUCT_OCCURRENCE/has_minimum	NH	NH_HVAC_DUCT_OCCURRENCE/has_minimum->
	ND	length_value
HVAC_DUCT_OCCURRNECE_DESIGN	NH	NH_HVAC_DUCT_OCCURRENCE<-
	NH	NH_HVAC_DUCT_OCCURRENCE_DESIGN
HVAC_DUCT_OCCURRNECE_IMPLEMENTATION	NH	NH_HVAC_DUCT_OCCURRENCE<-
	NH	NH_HVAC_DUCT_OCCURRENCE_IMPLEMENTATION
HVAC_DUCT_OCCURRENCE_IMPLEMENTATION/has_duct_length	NH	NH_HVAC_DUCT_OCCURRENCE_IMPLEMENTATION/has_duct_length->
	ND	length_value
HVAC_DUCT_OCCURRENCE_IMPLEMENTATION/has_duct_seam	NH	NH_HVAC_DUCT_OCCURRENCE_IMPLEMENTATION/has_duct_seam->
	NH	NH_DUCT_SEAM
HVAC_FAN_COIL_OCCURRENCE	NH	NH_HVAC_EQUIPMENT_OCCURRENCE<-
	NH	NH_HVAC_FAN_COIL_OCCURRENCE
HVAC_FAN_COIL_ASSEMBLY_OCCURRENCE	NH	NH_HVAC_FAN_OCCURRENCE<-
	NH	NH_HVAC_COIL_OCCURRENCE<-
	NH	NH_HVAC_FAN_COIL_ASSEMBLY_OCCURRENCE
HVAC_FAN_COIL_OCCURRENCE/has	NH	NH_HVAC_FAN_COIL_OCCURRENCE/has->
	NH	NH_SET_CONTROL_PARAMETER
HVAC_COIL_OCCURRENCE	NH	NH_HVAC_FAN_COIL_OCCURRENCE<-
	NH	NH_HVAC_COIL_OCCURRENCE
HVAC_FAN_OCCURRENCE	NH	NH_HVAC_FAN_COIL_OCCURRENCE<-
	NH	NH_HVAC_FAN_OCCURRENCE
HVAC_FAN_OCCURRENCE/has_equipment_hvac_number	NH	NH_HVAC_FAN_OCCURRENCE/has_equipment_hvac_number->
	11	integer
HVAC_FLOW_CONTROL_DEVICE	NH	NH_HVAC_DEVICE_OCCURRENCE<-
	NH	NH_HVAC_FLOW_CONTROL_DEVICE
HVAC_FLOW_CONTROL_DEVICE/has_number	NH	NH_HVAC_FLOW_CONTROL_DEVICE/has_number->
	11	integer
HVAC_PART_OCCURRENCE	ND	ND_DISTRIBUTION_PART_OCCURRENCE<-
	NH	NH_HVAC_PART_OCCURRENCE
HVAC_PART_OCCURRENCE_DESIGN	NH	NH_HVAC_PART_OCCURRENCE<-
	NH	NH_HVAC_PART_OCCURRENCE_DESIGN
HVAC_PART_OCCURRNECE_IMPLEMENTATION	NH	NH_HVAC_PART_OCCURRENCE<-
	NH	NH_HVAC_PART_OCCURRENCE_IMPLEMENTATION
HVAC_PART_OCCURRENCE_IMPLEMENTATION/has_access_opening	NH	NH_HVAC_PART_OCCURRENCE_IMPLEMENTATION/has_access_opening->
	NH	NH_ACCESS_OPENING
HVAC_PASSIVE_AIR_FILTER_OCCURRENCE	NH	NH_HVAC_DEVICE_OCCURRENCE<-
	NH	NH_HVAC_PASSIVE_AIR_FILTER_OCCURRENCE
HVAC_PASSIVE_AIR_FILTER_OCCURRENCE/has_filter_housing_number	NH	NH_HVAC_PASSIVE_AIR_FILTER_OCCURRENCE/has_filter_housing_number->
	11	integer
HVAC_SYSTEM_INTERFACE_OCCURRENCE	NH	NH_HVAC_INTERFACE_OCCURRENCE<-
	NH	NH_HVAC_SYSTEM_INTERFACE_OCCURRENCE
HVAC_TURN_ELBOW_OCCURRENCE	NH	NH_HVAC_FITTING_OCCURRENCE<-
	NH	NH_HVAC_TURN_ELBOW_OCCURRENCE
HVAC_TURN_ELBOW_OCCURRENCE/has_turn	NH	NH_HVAC_TURN_ELBOW_OCCURRENCE/ has_turn->
	ND	angle_value
INSTRUMENT_OCCURRENCE_DESIGN	ND	ND_INSTRUMENT_OCCURRENCE<-
	ND	ND_INSTRUMENT_OCCURRENCE_DESIGN

INSTRUMENT_OCCURRENCE_DESIGN/nameplate_inscription	ND	ND_INSTRUMENT_OCCURRENCE_DESIGN/nameplate_ inscription->
	41	text
INSTRUMENT_OCCURRENCE_IMPLEMENTATION	ND	ND_INSTRUMENT_OCCURRENCE<-
	ND	ND_INSTRUMENT_OCCURRENCE_IMPLEMENTATION
INDICATOR_ALARM	ND	ND_INSTRUMENT_OCCURRENCE_IMPLEMENTATION<
	ND	ND_INDICATOR_ALARM
INDICATOR_ALARM/low_value_alarm_setting	ND	ND_INDICATOR_ALARM/low_value_alarm_setting->
	11	real
INDICATOR_ALARM/high_value_alarm_setting	ND	ND_INDICATOR_ALARM/high_value_alarm_setting->
	11	real
INDICATOR_ALARM/instrument_alarm_values_units	ND	ND_INDICATOR_ALARM/instru-ment_alarm_values_units->
	41	text
POWER	ND	ND_POWER
POWER/power_characteristics	ND	ND_POWER/has_characteristics->
	ND	ND_POWER_CHARACTERISTICS
POWER/power_value	ND	ND_POWER/power_value->
	ND	power_value
POWER_CHARACTERISTICS	ND	ND_POWER_CHARACTERISTICS
POWER_CHARACTERISTICS/power_type	ND	ND_POWER_CHARACTERISTICS/power_type->
	11	enumeration
POWER_CHARACTERISTICS/power_characteristics_id	ND	ND_POWER_CHARACTERISTICS/ power_characteristics_id->
	41	identifier
AC_POWER_CHARACTERISTICS	ND	ND_POWER_CHARACTERISTICS
	ND	ND_AC_POWER_CHARACTERISTICS
AC_POWER_CHARACTERISTICS_C/number_of_phases	ND	ND_AC_POWER_CHARACTERISTICS/ number_of_phases->
	11	integer
AC_POWER_CHARACTERISTICS/voltage	ND	ND_AC_POWER_CHARACTERISTICS/voltage->
	ND	voltage_value
AC_POWER_CHARACTERISTICS/frequency	ND	ND_AC_POWER_CHARACTERISTICS/frequency->
	ND	frequency_value
DC_POWER_CHARACTERISTICS	ND	ND_POWER_CHARACTERISTICS
	ND	ND_DC_POWER_CHARACTERISTICS
DC_POWER_CHARACTERISTICS/voltage	ND	ND_DC_POWER_CHARACTERISTICS/voltage->
	ND	voltage_value
REMOVAL_ROUTE_ENVELOPE_OCCURRENCE	ND	ND_ENVELOPE_OCCURRENCE<-
	ND	ND_REMOVAL_ROUTE_ENVELOPE_OCCURRENCE
SPECIFIC_DISTRIBUTION_END	ND	ND_SPECIFIC_END_SPIV<-
	ND	ND_SPECIFIC_DISTRIBUTION_END
SPECIFIC_DUCT_HEATER	NH	NH_SPECIFIC_HVAC_HEATER<-
	NH	NH_SPECIFIC_DUCT_HEATER
SPECIFIC_STEAM_DUCT_HEATER	NH	NH_SPECIFIC_DUCT_HEATER<-
	NH	NH_SPECIFIC_STEAM_DUCT_HEATER
SPECIFIC_ELECTRICAL_DUCT_HEATER	NH	NH_SPECIFIC_DUCT_HEATER<-
	NH	NH_SPECIFIC_ELECTRICAL_DUCT_HEATER
SPECIFIC_ELECTRICAL_SPACE_HEATER	NH	NH_SPECIFIC_HVAC_HEATER<-
	NH	NH_SPECIFIC_ELECTRICAL_SPACE_HEATER
SPECIFIC_ENGINEERING_PART_DESIGN	ND	ND_SPECIFIC_ENGINEERING_PART<-
	ND	ND_SPECIFIC_ENGINEERING_PART_DESIGN
SPECIFIC_ENGINEERING_PART_DESIGN/description	ND	ND_SPECIFIC_ENGINEERING_PART_DESIGN/part_descrip -tion->
	41	text
SPECIFIC_ENGINEERING_PART_DESIGN/specification	ND	ND_SPECIFIC_ENGINEERING_PART_DESIGN/part_specifi- cation->
	41	text
SPECIFIC_ENGINEERING_PART_DESIGN/material	ND	ND_SPECIFIC_ENGINEERING_PART_DE-SIGN/material->
	41	label
SPECIFIC_ENGINEERING_PART_DESIGN/material_specification	ND	ND_SPECIFIC_ENGINEERING_PART_DESIGN/material_ specification->
	41	text
SPECIFIC_ENGINEERING_PART_IMPLEMENTATION	ND	ND_SPECIFIC_ENGINEERING_PART<-
	ND	ND_SPECIFIC_ENGINEERING_PART_IMPLEMENTATION
SPECIFIC_ENGINEERING_PART_IMPLEMENTATION/identifier	ND	ND_ENGINEERING_PART_IDENTIFIER
SPECIFIC_ENGINEERING_PART_IMPLEMENTATION/manufacturer_ name	ND	ND_SPECIFIC_ENGINEERING_PART_IMPLEMENTATION /manufacturer_name->
	41	text
SPECIFIC_ENGINEERING_PART_IMPLEMENTATION/manufacturer_ part_number	ND	ND_SPECIFIC_ENGINEERING_PART_IMPLEMENTATION /manufacturer_part_number->
	41	identifier
SPECIFIC_ENGINEERING_PART_IMPLEMENTATION/NAVSEA_drawing_nu mber	ND	ND_SPECIFIC_ENGINEERING_PART_IMPLEMENTATION /NAVSEA_drawing_number->

	41	identifier
SPECIFIC_ENGINEERING_PART_IMPLEMENTATION/allowance_parts_list_number	ND	ND_SPECIFIC_ENGINEERING_PART_IMPLEMENTATION /allowance_parts_list_number->
	41	identifier
SPECIFIC_ENGINEERING_PART_IMPLEMENTATION/dry_weight	ND	ND_SPECIFIC_ENGINEERING_PART_IMPLEMENTATION /dry_weight->
	ND	weight_value
SPECIFIC_ENGINEERING_PART_IMPLEMENTATION/wet_weight	ND	ND_SPECIFIC_ENGINEERING_PART_IMPLEMENTATION /wet_weight->
	ND	weight_value
SPECIFIC_ENGINEERING_PART_IMPLEMENTATION/MIL-STD_number	ND	ND_SPECIFIC_ENGINEERING_PART_IMPLEMENTATION /MIL-STD_number->
	41	TEXT
SPECIFIC_EQUIPMENT_DESIGN	ND	ND_SPECIFIC_EQUIPMENT<-
	ND	ND_SPECIFIC_EQUIPMENT_DESIGN
SPECIFIC_EQUIPMENT_DESIGN/has_flow_condition	ND	ND_SPECIFIC_EQUIPMENT_DESIGN/ has_flow_condition->
	ND	ND_MEDIUM_FLOW
SPECIFIC_EQUIPMENT_IMPLEMENTATION	ND	ND_SPECIFIC_EQUIPMENT<-
	ND	ND_SPECIFIC_EQUIPMENT_IMPLEMENTATION
SPECIFIC_EQUIPMENT_IMPLEMENTATION/source	ND	ND_SPECIFIC_EQUIPMENT_IMPLEMENTATION/source->
	41	text
SPECIFIC_EQUIPMENT_IMPLEMENTATION/manufacturers_draw-ing_number	ND	ND_SPECIFIC_EQUIPMENT_IMPLEMENTATION/manufac-turers_drawing_number->
	41	identifier
SPECIFIC_EQUIPMENT_IMPLEMENTATION/shock_qualification_status	ND	ND_SPECIFIC_EQUIPMENT_IMPLEMENTATION/shock_qualification_status->
	41	text
SPECIFIC_EQUIPMENT_IMPLEMENTATION/interchangeability	ND	ND_SPECIFIC_EQUIPMENT_IMPLEMENTATION/inter-changability->
	ND	ND_EQUIPMENT_INTERCHANGEABILITY
EQUIPMENT_INTERCHANGEABILITY	ND	ND_EQUIPMENT_INTERCHANGEABILITY
EQUIPMENT_INTERCHANGEABILITY/description	ND	ND_EQUIPMENT_INTERCHANGEABILITY/ description->
	41	text
SPECIFIC_EQUIPMENT_IMPLEMENTATION/interchangeability	ND	ND_SPECIFIC_EQUIPMENT_IMPLEMENTATION/inter-changeability->
	41	text
SPECIFIC_EQUIPMENT_IMPLEMENTATION/input_power_at_rated_condition	ND	ND_SPECIFIC_EQUIPMENT_IMPLEMENTATION/input_power_at_rated_condition->
	ND	ND_POWER
SPECIFIC_EQUIPMENT_IMPLEMENTATION/output_power	ND	ND_SPECIFIC_EQUIPMENT_IMPLEMENTATION/output_power->
	ND	ND_POWER
SPECIFIC_EQUIPMENT_IMPLEMENTATION/pressure_rating	ND	ND_SPECIFIC_EQUIPMENT_IMPLEMENTATION/pressure_rating->
	ND	pressure_value
SPECIFIC_EQUIPMENT_IMPLEMENTATION/rated_temperature	ND	ND_SPECIFIC_EQUIPMENT_IMPLEMENTATION/rated_temperature->
	ND	temperature_value
SPECIFIC_EQUIPMENT_IMPLEMENTATION/has_losses	ND	ND_MEDIUM_LOSS
SPECIFIC_EQUIPMENT_IMPLEMENTATION/safety_consideration_description	ND	ND_SPECIFIC_EQUIPMENT_IMPLEMENTATION/safety_consideration_description->
	41	text
SPECIFIC_EQUIPMENT_IMPLEMENTATION/foundation_finish	ND	ND_SPECIFIC_EQUIPMENT_IMPLEMENTATION/founda-tion_finish->
	41	text
SPECIFIC_EQUIPMENT_IMPLEMENTATION/alignment_flatness_tolerance	ND	ND_SPECIFIC_EQUIPMENT_IMPLEMENTATION/alignment_flatness_tolerance->
	ND	length_value
SPECIFIC_EQUIPMENT_IMPLEMENTATION/alignment_angularity_tolerance	ND	ND_SPECIFIC_EQUIPMENT_IMPLEMENTATION/alignment_angularity_tolerance->
	ND	angle_value
SPECIFIC_FASTENER_SET	ND	ND_SPECIFIC_FASTENER_SET
SPECIFIC_FASTENER_SET/fastener_usage	ND	ND_FASTENER_USAGE
SPECIFIC_FASTENER_SET/id	ND	ND_SPECIFIC_FASTENER_SET/ specific_fastener_set_id->
	41	identifier
SPECIFIC_HVAC_ACTIVE_FILTER	NH	NH_SPECIFIC_HVAC_EQUIPMENT<-
	NH	NH_SPECIFIC_HVAC_ACTIVE_FILTER
SPECIFIC_HVAC_ACTIVE_FILTER/has_type	NH	NH_SPECIFIC_HVAC_ACTIVE_FILTER/has_type->
	41	text
SPECIFIC_HVAC_ACTIVE_FILTER/has_size	NH	NH_SPECIFIC_HVAC_ACTIVE_FILTER/has_size->
	11	integer
SPECIFIC_HVAC_ACTIVE_FILTER/has_design_loss_clean	NH	NH_SPECIFIC_HVAC_ACTIVE_FILTER/has_design_loss_

		clean->
	ND	pressure_value
SPECIFIC_HVAC_ACTIVE_FILTER/has_design_loss_dirty	NH	NH_SPECIFIC_HVAC_ACTIVE_FILTER/has_design_loss_ dirty->
	ND	pressure_value
SPECIFIC_HVAC_FAN_COIL	NH	NH_SPECIFIC_HVAC_EQUIPMENT<-
	NH	NH_SPECIFIC_HVAC_FAN_COIL
SPECIFIC_HVAC_COIL	NH	NH_SPECIFIC_HVAC_FAN_COIL<-
	NH	NH_SPECIFIC_HVAC_COIL
SPECIFIC_HVAC_FAN_COIL/has_size	NH	NH_SPECIFIC_HVAC_FAN_COIL/has_size->
	11	integer
SPECIFIC_HVAC_FAN_COIL/has_type	NH	NH_SPECIFIC_HVAC_FAN_COIL/has_type->
	41	text
SPECIFIC_HVAC_FAN	NH	NH_SPECIFIC_HVAC_FAN_COIL<-
	NH	NH_SPECIFIC_HVAC_FAN
SPECIFIC_HVAC_HEATER	NH	NH_SPECIFIC_HVAC_EQUIPMENT<-
	NH	NH_SPECIFIC_HVAC_HEATER
SPECIFIC_HVAC_HEATER/has_maximum_capacity	NH	NH_SPECIFIC_HVAC_HEATER/ has_maximum_capacity->
	ND	heat_rate_value
SPECIFIC_HVAC_HEATER/has_size	NH	NH_SPECIFIC_HVAC_HEATER/has_size->
	41	integer
SPECIFIC_HVAC_HEATER/has_type	NH	NH_SPECIFIC_HVAC_HEATER/has_type->
	41	text
SPECIFIC_HVAC_PART	ND	ND_SPECIFIC_DISTRIBUTION_PART<-
	NH	NH_SPECIFIC_HVAC_PART
SPECIFIC_HVAC_PART_IMPLEMENTATION	NH	NH_SPECIFIC_HVAC_PART<-
	NH	NH_SPECIFIC_HVAC_PART_IMPLEMENTATION
SPECIFIC_HVAC_PART_IMPLEMENTATION/has_thickness_gauge_ format	NH	NH_SPECIFIC_HVAC_PART_IMPLEMENTATION/has_ thickness_gauge_format->
	11	enumeration
SPECIFIC_HVAC_PART_IMPLEMENTATION/has_thickness_gauge_ value	NH	NH_SPECIFIC_HVAC_PART_IMPLEMENTATION/has_thick -ness_gauge_value->
	11	real
SPECIFIC_HVAC_PART_DESIGN	NH	NH_SPECIFIC_HVAC_PART
	NH	NH_SPECIFIC_HVAC_PART_DESIGN
SPECIFIC_HVAC_PART_DESIGN/has_part_type	NH	NH_SPECIFIC_HVAC_PART_DESIGN/has_part_type->
	41	text
SPECIFIC_HVAC_COMPONENT	NH	NH_SPECIFIC_HVAC_PART<-
	NH	NH_SPECIFIC_HVAC_COMPONENT
SPECIFIC_HVAC_COMPONENT_DESIGN	NH	NH_SPECIFIC_HVAC_COMPONENT<-
	NH	NH_SPECIFIC_HVAC_COMPONENT_DESIGN
specific_hvac_component_implementation	NH	nh_specific_hvac_component<-
	NH	NH_SPECIFIC_HVAC_COMPONENT_IMPLEMENTATION
SPECIFIC_HVAC_DUCT	NH	NH_SPECIFIC_HVAC_PART<-
	NH	NH_SPECIFIC_HVAC_DUCT
SPECIFIC_HVAC_DUCT_DESIGN	NH	NH_SPECIFIC_HVAC_DUCT<-
	NH	NH_SPECIFIC_HVAC_DUCT_DESIGN
SPECIFIC_HVAC_DUCT_DESIGN/has_loss_per_foot	NH	NH_SPECIFIC_HVAC_DUCT_DESIGN/ has_loss_per_foot->
	ND	pressure_value
SPECIFIC_HVAC_DUCT_DESIGN/has_maximum	NH	NH_SPECIFIC_HVAC_DUCT_DESIGN/ has_maximum->
	ND	velocity_value
SPECIFIC_HVAC_DEVICE	NH	NH_SPECIFIC_HVAC_COMPONENT
	NH	NH_SPECIFIC_HVAC_DEVICE<-
SPECIFIC_HVAC_FITTING	NH	NH_SPECIFIC_HVAC_COMPONENT
	NH	NH_SPECIFIC_HVAC_FITTING<-
SPECIFIC_HVAC_FITTING/has_type	NH	NH_SPECIFIC_HVAC_FITTING/has_type->
	41	text
SPECIFIC_HVAC_FLOW_CONTROL_DEVICE	NH	NH_SPECIFIC_HVAC_DEVICE<-
	NH	NH_SPECIFIC_HVAC_FLOW_CONTROL_DEVICE
SPECIFIC_HVAC_FLOW_CONTROL_DEVICE/device_type	NH	NH_SPECIFIC_HVAC_FLOW_CONTROL_DEVICE/device_ type->
	11	enumeration
SPECIFIC_HVAC_PASSIVE_FILTER	NH	NH_SPECIFIC_DEVICE<-
	NH	NH_SPECIFIC_HVAC_PASSIVE_FILTER
SPECIFIC_HVAC_PASSIVE_FILTER_DESIGN	NH	NH_SPECIFIC_HVAC_PASSIVE_FILTER<-
	NH	NH_SPECIFIC_HVAC_PASSIVE_FILTER_DESIGN
SPECIFIC_HVAC_PASSIVE_FILTER_DESIGN/has_loss_clean	NH	NH_SPECIFIC_HVAC_PASSIVE_FILTER_DESIGN/has_loss _clean->
	ND	pressure_value
SPECIFIC_HVAC_PASSIVE_FILTER_DESIGN/has_loss_dirty	NH	NH_SPECIFIC_HVAC_PASSIVE_FILTER_DESIGN/has_loss _dirty->
	ND	pressure_value

SPECIFIC_HVAC_PASSIVE_FILTER_DESIGN/has_filter_gauge_ maximum	NH	NH_SPECIFIC_HVAC_PASSIVE_FILTER_DESIGN/has_filte r_gauge_maximum->
	ND	pressure_value
SPECIFIC_HVAC_PASSIVE_FILTER_IMPLEMENTATION	NH	NH_SPECIFIC_HVAC_PASSIVE_FILTER<-
	NH	NH_SPECIFIC_HVAC_PASSIVE_FILTER_IMPLEMEN-TATION
SPECIFIC_HVAC_PASSIVE_FILTER_IMPLEMENTATION/has_type	NH	NH_SPECIFIC_HVAC_PASSIVE_FILTER_IMPLEMENTA-TION/has_type->
	41	text
SPECIFIC_HVAC_PASSIVE_FILTER_IMPLEMENTATION/has_size	NH	NH_SPECIFIC_HVAC_PASSIVE_FILTER_IMPLEMENTA-TION/has_size->
	11	integer
SPECIFIC_HVAC_TURN_ELBOW	NH	NH_SPECIFIC_HVAC_FITTING
	NH	NH_SPECIFIC_HVAC_TURN_ELBOW
SPECIFIC_HVAC_TURN_ELBOW/has_type	NH	NH_SPECIFIC_HVAC_TURN_ELBOW/has_type->
	11	enumeration
SPECIFIC_HVAC_TURN_ELBOW/has_number_of_splitters	NH	NH_SPECIFIC_HVAC_TURN_ELBOW/has_number_of_split-ters->
	11	integer
SPECIFIC_HVAC_TURN_ELBOW/has_aspect_ratio	NH	NH_SPECIFIC_HVAC_TURN_ELBOW/ has_aspect_ratio->
	11	real
SPECIFIC_HVAC_TURN_ELBOW/has_radius_ratio	NH	NH_SPECIFIC_HVAC_TURN_ELBOW/ has_radius_ratio->
	11	real
SPECIFIC_HVAC_TURN_ELBOW/has_radius	NH	NH_SPECIFIC_HVAC_TURN_ELBOW/has_radius->
	ND	length_value
SPECIFIC_HVAC_TURN_ELBOW/has_splitter_radius	NH	NH_SPECIFIC_HVAC_TURN_ELBOW/ has_splitter_radius->
	ND	length_valueSPECIFIC_INSTRUMENT_DESIGN
	ND	ND_SPECIFIC_INSTRUMENT
	ND	ND_SPECIFIC_INSTRUMENT_DESIGN
SPECIFIC_INSTRUMENT_DESIGN/instrument_type	ND	ND_SPECIFIC_INSTRUMENT_DESIGN/ instrument_type->
	41	label
SPECIFIC_INSTRUMENT_DESIGN/measured_parameter measured_parameter->	ND	ND_SPECIFIC_INSTRUMENT_DESIGN/
	41	label
SPECIFIC_INSTRUMENT_IMPLEMENTATION	ND	ND_SPECIFIC_INSTRUMENT
	ND	ND_SPECIFIC_INSTRUMENT_IMPLEMENTATION
SPECIFIC_INSTRUMENT_IMPLEMENTATION/dial_size	ND	ND_SPECIFIC_INSTRUMENT_IMPLEMENTATION/dial_ size->
	ND	length_value
SPECIFIC_INSTRUMENT_IMPLEMENTATION/range_low_value	ND	ND_SPECIFIC_INSTRUMENT_IMPLEMENTATION/range_ low_value->
	11	real
SPECIFIC_INSTRUMENT_IMPLEMENTATION/range_high_value	ND	ND_SPECIFIC_INSTRUMENT_IMPLEMENTATION/range_ high_value->
	11	real
SPECIFIC_INSTRUMENT_IMPLEMENTATION/red_hand-alarm_setting	ND	ND_SPECIFIC_INSTRUMENT_IMPLEMENTATION/ red_hand-alarm_setting->
	11	real
SPECIFIC_INSTRUMENT_IMPLEMENTATION/instrument_values_ units	ND	ND_SPECIFIC_INSTRUMENT_IMPLEMENTATION/instru-ment_values_units->
	41	text
STEAM_DUCT_HEATER_OCCURRENCE	NH	NH_DUCT_HEATER_OCCURRENCE<-
	NH	NH_STEAM_DUCT_HEATER_OCCURRENCE
STEAM_DUCT_HEATER_OCCURRENCE/has_design_heating_ medium	NH	NH_STEAM_DUCT_HEATER_OCCURRENCE/has_design_ heating_medium->
	ND	flow_rate_value
UNIT_COOLER_OCCURRENCE	NH	NH_HVAC_FAN_OCCURRENCE<-
	NH	NH_HVAC_COIL_OCCURRENCE<-
	NH	NH_UNIT_COOLER_OCCURRENCE
UNIT_HEATER_OCCURRENCE	NH	NH_HVAC_HEATER_OCCURRENCE<-
	NH	NH_UNIT_HEATER_OCCURRENCE
UNIT_HEATER_OCCURRENCE/has_design_heating_medium	NH	NH_UNIT_HEATER_OCCURRENCE/ has_design_heating_medium->
	ND	flow_rate_value

5.1.10 Attachments

ARM ENTITY/attribute	ISO 10303 Part	AIM ENTITY/attribute
ATTACHED-PENETRATING_OBJECT	ND	ND_ATTACHED-PENETRATING_OBJECT
	11	SELECT

ATTACHED-PENETRATING_OBJECT/implemented_by	ND	ND_ATTACHED-PENETRATING_OBJECT/implemented_by
	ND	ND_ENGINEERING_PART_OCCURRENCE
ATTACHED-PENETRATING_OBJECT/implemented_by	ND	ND_ATTACHED-PENETRATING_OBJECT/implemented_by
	ND	ND_DISTRIBUTION_INTERCONNECTION_OCCUR-RENCE
ATTACHING-PENETRATED_OBJECT	ND	ND_ATTACHING-PENETRATED_OBJECT
	11	SELECT
ATTACHING-PENETRATED_OBJECT/implemented_by	ND	ND_ATTACHING-PENETRATED_OBJECT/implemented_by
	ND	ND_ENGINEERING_PART_OCCURRENCE
ATTACHING-PENETRATED_OBJECT/implemented_by	ND	ND_ATTACHING-PENETRATED_OBJECT/implemented_by
	ND	ND_ATTACHING_PART_OCCURRENCE
ATTACHMENT_CONFIGURATION	ND	ND_ATTACHMENT_CONFIGURATION
ATTACHMENT_CONFIGURATION/id	ND	ND_ATTACHMENT_CONFIGURATION/ attachment_configuration_id-->
	41	identifier
ATTACHMENT_CONFIGURATION/dimensionality	ND	ND_ATTACHMENT_CONFIGURATION/ attachment_configuration_dimensionality-->
	11	integer
ATTACHMENT_CONFIGURATION/function	ND	ND_ATTACHMENT_CONFIGURATION/ attachment_configuration_function-->
	41	text
ATTACHMENT_END_OCCURRENCE	ND	ND_ATTACHMENT_END_OCCURRENCE
ATTACHMENT_END_OCCURRENCE/is_dependent_end_in	ND	ND_ATTACHMENT_END_OCCURRENCE/ is_dependent_end_in-->
	ND	ND_ATTACHMENT_CONFIGURATION
ATTACHMENT_END_OCCURRENCE/is_independent_end_in	ND	ND_ATTACHMENT_END_OCCURRENCE/ is_independent_end_in-->
	ND	ND_ATTACHMENT_CONFIGURATION
ATTACHMENT_END_OCCURRENCE/attaches	ND	ND_ATTACHMENT_END_OCCURRENCE/attaches-->
	ND	ND_ATTACHING-PENETRATED_OBJECT
ATTACHMENT_END_OCCURRENCE/attached	ND	ND_ATTACHMENT_END_OCCURRENCE/attached-->
	ND	ND_ATTACHED-PENETRATING_OBJECT
ATTACHMENT_OCCURRENCE	ND	ND_INTERFACE_SPIV_OCCURRENCE
	ND	ND_ATTACHMENT_OCCURRENCE
ATTACHING_PART_OCCURRENCE	ND	ND_DISCRETE_PART_OCCURRENCE
	ND	ND_ATTACHING_PART_OCCURRENCE
ATTACHMENT_POSITIONAL_DEPENDENCY	ND	ND_ATTACHMENT_POSITIONAL_DEPENDENCY
ATTACHMENT_POSITIONAL_DEPENDENCY/has_dependent_attachment_of	ND	ND_ATTACHMENT_POSITIONAL_DEPENDENCY/ has_dependent_attachment_of-->
	ND	ND_ATTACHMENT_OCCURRENCE
ATTACHMENT_POSITIONAL_DEPENDENCY/has_independent_attachment_of	ND	ND_ATTACHMENT_POSITIONAL_DEPENDENCY/ has_independent_attachment_of-->
	ND	ND_ATTACHMENT_OCCURRENCE
FASTENER_SET_OCCURRENCE	ND	ND_FASTENER_SET_OCCURRENCE
FASTENER_SET_OCCURRENCE/id	ND	ND_FASTENER_SET_OCCURRENCE/ fastener_set_id-->
	41	identifier
FASTENER_SET_OCCURRENCE/type	ND	ND_FASTENER_SET_OCCURRENCE/ fastener_set_type-->
	41	text
FASTENER_USAGE	ND	ND_FASTENER_USAGE
FASTENER_USAGE/specific_fastener	ND	ND_SPECIFIC_FASTENER
FASTENER_USAGE/fastener_set_usage	ND	ND_FASTENER_SET_USAGE
FASTENER_USAGE/fastener_quantity	ND	ND_FASTENER_USAGE/fastener_quantity-->
	11	integer
OPERATOR	ND	ND_ATTACHING_PART_OCCURRENCE
	ND	ND_OPERATOR
OPERATOR/operates	ND	ND_HVAC_FLOW_CONTROL_DEVICE_OCCURRENCE
PENETRATION_PART	ND	ND_ATTACHING_PART_OCCURRENCE
	ND	ND_PENETRATION_PART
DUCT_REINFORCING	ND	ND_ATTACHING_PART_OCCURRENCE
	NH	NH_DUCT_REINFORCING
HVAC_SUPPORT	ND	ND_ATTACHING_PART_OCCURRENCE
	NH	NH_HVAC_SUPPORT
SPECIFIC_ATTACHING_PART_IMPLEMENTATION	ND	ND_SPECIFIC_ATTACHING_PART
	ND	ND_SPECIFIC_ATTACHING_PART_IMPLEMENTATIO N
SPECIFIC_FASTENER_SET	ND	ND_SPECIFIC_FASTENER_SET
SPECIFIC_FASTENER_SET/id	ND	ND_SPECIFIC_FASTENER_SET/id-->

	41	identifier
SPECIFIC_FASTENER_SET/fastener_set_usage	ND	ND_FASTENER_SET_USAGE
SPECIFIC_OPERATOR	ND	ND_SPECIFIC_ATTACHING_PART
	ND	ND_SPECIFIC_OPERATOR
SPECIFIC_HVAC_FASTENER	ND	ND_SPECIFIC_FASTENER
	NH	NH_SPECIFIC_HVAC_FASTENER
SPECIFIC_HVAC_FASTENER/type	NH	NH_SPECIFIC_HVAC_FASTENER/hvac_fastener_type-->
	11	enumeration

5.1.11 Insulation

ARM ENTITY/attribute	ISO 10303 Part	AIM ENTITY/attribute
EXTERIOR_INSULATION_PART	ND	ND_INSULATION_PART_OCCURRENCE<-
	ND	ND_EXTERIOR_INSULATION_PART
INSULATION_PART_OCCURRENCE	ND	ND_ATTACHING_PART_OCCURRENCE
	ND	ND_INSULATION_PART_OCCURRENCE
INTERIOR_INSULATION_PART	ND	ND_INSULATION_PART_OCCURRENCE<-
	ND	ND_INTERIOR_INSULATION_PART
INTERIOR_INSULATION_PART/reduces_xsect_of	ND	ND_INTERIOR_INSULATION_PART/ reduces_xsect_of->
	ND	ND_ATTACHED_PENETRATING_OBJECT
SPECIFIC_INSULATION_PART	ND	ND_SPECIFIC_ATTACHING_PART
	ND	ND_SPECIFIC_INSULATION_PART
SPECIFIC_INSULATION_PART/has_thickness	ND	ND_SPECIFIC_INSULATION_PART/has_thickness->
	ND	ND_TOTAL_PART_INSULATION_THICKNESS
TOTAL_PART_INSULATION_THICKNESS	ND	ND_TOTAL_PART_INSULATION_THICKNESS
TOTAL_PART_INSULATION_THICKNESS/has_id	ND	ND_TOTAL_PART_INSULATION_THICKNESS/has_ id->
	41	identifier
TOTAL_PART_INSULATION_THICKNESS/insulation_thickness_value	ND	ND_TOTAL_PART_INSULATION_THICKNESS/ insulation_thickness_value-->
	ND	length_value
TOTAL_PART_INSULATION_THICKNESS/used_to_derive_geom_of	ND	ND_TOTAL_PART_INSULATION_THICKNESS/used _to_derive_geom_of->
	ND	ND_PART_ENVELOPE_OCCURRENCE_SHAPE_ REPRESENTATION

5.1.12 HVAC assemblies

ARM ENTITY/attribute	ISO 10303 Part	AIM ENTITY/attribute
ASSEMBLY_ASSEMBLY_INSTRUCTION	ND	ND_ASSEMBLY_INSTRUCTION<-
	ND	ND_ASSEMBLY_ASSEMBLY_INSTRUCTION
ASSEMBLY_COATING_INSTRUCTION	ND	ND_ASSEMBLY_INSTRUCTION<-
	ND	ND_ASSEMBLY_COATING_INSTRUCTION
ASSEMBLY_END_PORT	ND	ND_ASSEMBLY_END_PORT
ASSEMBLY_END_PORT/of_hvac_assembly	ND	ND_ASSEMBLY_END_PORT/of_hvac_assembly-->
	NH	NH_HVAC_ASSEMBLY_OCCURRENCE
ASSEMBLY_INSTALLATION_INSTRUCTION	ND	ND_ASSEMBLY_INSTRUCTION<-
	ND	ND_ASSEMBLY_INSTALLATION_INSTRUCTION
ASSEMBLY_INSTRUCTION	41	text
	ND	ND_ASSEMBLY_INSTRUCTION
ASSEMBLY_INSTRUCTION/type	ND	ND_ASSEMBLY_INSTRUCTION/assembly_instructio n_kind-->
	41	label
ASSEMBLY_INSTRUCTION/number	ND	ND_ASSEMBLY_INSTRUCTION/assembly_instructio n_number-->
	11	integer
ASSEMBLY_INSTRUCTION/description	ND	ND_ASSEMBLY_INSTRUCTION/assembly_instructio n_description-->
	41	text
ASSEMBLY_INSULATION_INSTRUCTION	ND	ND_ASSEMBLY_INSTRUCTION<-
	ND	ND_ASSEMBLY_INSULATION_INSTRUCTION
ASSEMBLY_OCCURRENCE	ND	ND_PRODUCT_SPIV_OCCURRENCE<-
	ND	ND_ASSEMBLY_OCCURRENCE
HVAC_ASSEMBLY_OCCURRENCE	ND	ND_ASSEMBLY_OCCURRENCE<-
	NH	NH_HVAC_ASSEMBLY_OCCURRENCE

HVAC_ASSEMBLY_OCCURRENCE/assembly_name	NH	NH_HVAC_ASSEMBLY_OCCURRENCE/ assembly_name-->
	41	label
HVAC_ASSEMBLY_OCCURRENCE/assembly_shop_drawing_number	NH	NH_HVAC_ASSEMBLY_OCCURRENCE/ assembly_shop_drawing_number-->
	41	identifier
HVAC_ASSEMBLY_OCCURRENCE/hvac_assembly_type	NH	NH_HVAC_ASSEMBLY_OCCURRENCE/ hvac_assembly_type-->
	41	label
HVAC_FABRICATION_PART	NH	NH_HVAC_PART<-
	NH	NH_HVAC_FABRICATION_PART
HVAC_FABRICATION_PART/hvac_fabrication_part_id->	NH	NH_HVAC_FABRICATION_PART/ hvac_fabrication_part_id
	41	identifier
HVAC_FAB_PART_STANDARD_SHAPE_MACRO_PART	NH	NH_HVAC_FABRICATION_PART<-
	NH	NH_HVAC_FAB_PART_STANDARD_SHAPE_ MACRO_PART
HVAC_FAB_PART_STANDARD_SHAPE_MACRO_PARAMETER	NH	NH_HVAC_FAB_PART_STANDARD_SHAPE_ MACRO_PARAMETER
HVAC_FAB_PART_STANDARD_SHAPE_MACRO_PARAMETER/name	NH	NH_HVAC_FAB_PART_STANDARD_SHAPE_ MACRO_PARAMETER/name->
	41	text
HVAC_FAB_PART_STANDARD_SHAPE_MACRO_PARAMETER/value	NH	NH_HVAC_FAB_PART_STANDARD_SHAPE_ MACRO_PARAMETER/value->
	41	real
HVAC_FAB_PART_EXPLICIT_GEOMETRY_PART	NH	NH_HVAC_FABRICATION_PART<-
	NH	NH_HVAC_FAB_PART_EXPLICIT_GEOMETRY_ PART
HVAC_FAB_PART_EXPLICIT_GEOMETRY_PART/has_fabrication_piece->	NH	NH_HVAC_FAB_PART_EXPLICIT_GEOMETRY_ PART/has_fabrication_piece
	NH	NH_HVAC_FABRICATION_PIECE
HVAC_FABRICATION_PIECE	NH	NH_HVAC_FABRICATION_PIECE
HVAC_FABRICATION_PIECE/id	NH	NH_HVAC_FABRICATION_PIECE/id->
	41	identifier
HVAC_FABRICATION_PIECE/bend_break_line_layout_geometry	NH	NH_HVAC_FABRICATION_PIECE/ bend_break_line_layout_geometry->
	NH	NH_HVAC_FAB_PIECE_BEND_BREAK_LINE_LAY -OUT_GEOMETRY
HVAC_FABRICATION_PIECE/hole_punch_layout_geometry	NH	NH_HVAC_FABRICATION_PIECE/ hole_punch_layout_geometry->
	NH	NH_HVAC_FAB_PIECE_HOLE_PUNCH_LAY- OUT_GEOMETRY
HVAC_FABRICATION_PIECE/cutting_geometry	NH	NH_HVAC_FABRICATION_PIECE/cutting_geometry- >
	NH	NH_HVAC_FABRICATION_PIECE_CUTTING_GEO- METRY
HVAC_FABRICATION_PART_END	NH	NH_HVAC_PORT_OCCURRENCE<-
	NH	NH_FABRICATION_PART_END
HVAC_FABRICATION_PART_END/end_preparation	NH	NH_HVAC_FABRICATION_PART_END/end_prepara -tion->
	41	text

5.1.13 Shape and path representation

ARM ENTITY/attribute	ISO 10303 Part	AIM ENTITY/attribute
ACCESS_OPENING_SHAPE_DIMENSION	NH	NH_ACCESS_OPENING_SHAPE_DIMENSION
ACCESS_OPENING_SHAPE_DIMENSION/has_name	NH	NH_ACCESS_OPENING_SHAPE_DIMENSION/has_ name->
	41	label
ACCESS_OPENING_SHAPE_DIMENSION/has_value	NH	NH_ACCESS_OPENING_SHAPE_DIMENSION/has_ value->
	11	real
ACCESS_OPENING_SHAPE_REPRESENTATION	NH	NH_ACCESS_OPENING_SHAPE_REPRESENTATION<-
	42	geometric_curve_set
ACCESS_OPENING_SHAPE_REPRESENTATION/has_is	NH	NH_ACCESS_OPENING_SHAPE_REPRESENTATION/has_id- >
	41	identifier
ACCESS_OPENING_SHAPE_REPRESENTATION/has_shape_dimension	NH	NH_ACCESS_OPENING_SHAPE_REPRESENTATION/has_sh ape_dimension->

	NH	NH_ACCESS_OPENING_SHAPE_DIMENSION
ACCESS_OPENING_SHAPE_REPRESENTATION/has_shape_type	NH	NH_ACCESS_OPENING_SHAPE_REPRESENTATION/has_shape_type->
	11	enumeration
PART_ENVELOPE_OCCURRENCE_SHAPE_REPRESENTATION	43	REPRESENTATION
	ND	ND_PART_ENVELOPE_OCCURRENCE_SHAPE_RE-PRESENTATION
PART_ENVELOPE_OCCURRENCE_SHAPE_REPRESENTATION/id	ND	ND_PART_ENVELOPE_OCCURRENCE_SHAPE_RE-PRESENTATION/id->
	41	identifier
PART_ENVELOPE_OCCURRENCE_SHAPE_REPRESENTATION/is_shape_of	ND	ND_PART_ENVELOPE_OCCURRENCE_SHAPE_RE-PRESENTATION/is_shape_of->
	ND	ND_ENGINEERING_PART_OCCURRENCE
PART_ENVELOPE_OCCURRENCE_SHAPE_REPRESENTATION/part_envelope_type	ND	ND_PART_ENVELOPE_OCCURRENCE_SHAPE_RE-PRESENTATION/ part_envelope_type->
	41	text
PART_ENVELOPE_OCCURRENCE_SHAPE_REPRESENTATION/shape_representation_type	ND	ND_PART_ENVELOPE_OCCURRENCE_SHAPE_RE-PRESENTATION/shape_representation_type->
	11	enumeration
SPECIFIC_ENGINEERING_PART_SHAPE_REPRESENTATION	43	REPRESENTATION
	ND	ND_SPECIFIC_ENGINEERING_PART_SHAPE_RE-PRESENTATION
SPECIFIC_ENGINEERING_PART_SHAPE_REPRESENTATION/is_shape_of	ND	ND_SPECIFIC_ENGINEERING_PART_SHAPE_RE-PRESENTATION/ is_shape_of->
	ND	ND_SPECIFIC_ENGINEERING_PART
SPECIFIC_ENGINEERING_PART_SHAPE_REPRESENTATION/has_type	ND	ND_SPECIFIC_ENGINEERING_PART_SHAPE_RE-PRESENTATION/specific_engineering_part_shape_re-presentation_type->
	11	enumeration
SPECIFIC_ENGINEERING_PART_SHAPE_REPRESENTATION/has_style	ND	ND_SPECIFIC_ENGINEERING_PART_SHAPE_RE-PRESENTATION/specific_engineering_part_shape_re-presentation_style->
	11	enumeration
SPECIFIC_ENGINEERING_PART_SHAPE_REPRESENTATION/is_represented_by	ND	ND_SPECIFIC_ENGINEERING_PART_SHAPE_RE-PRESENTATION/is_represen-ted_by->
	41	identifier
SPECIFIC_PATH_ARC_SHAPE_REPRESENTATION	43	REPRESENTATION
	ND	ND_SPECIFIC_PATH_ARC_SHAPE_REPRESENTATION
SPECIFIC_PATH_ARC_SHAPE_REPRESENTATION/is_shape_of	ND	ND_SPECIFIC_PATH_ARC_SHAPE_REPRESENTATION/is_shape_of->
	ND	ND_SPECIFIC_PATH_ARC
SPECIFIC_PATH_ARC_SHAPE_REPRESENTATION/has_style	ND	ND_SPECIFIC_PATH_ARC_SHAPE_REPRESENTATION/specific_path_arc_shape_representation_style->
	11	enumeration
SPECIFIC_PATH_ARC_SHAPE_REPRESENTATION/is_represented_by	ND	ND_SPECIFIC_PATH_ARC_SHAPE_REPRESENTATION/is_represented_by->
	41	identifier
SPECIFIC_PATH_NODE_SHAPE_REPRESENTATION	43	REPRESENTATION
	ND	ND_SPECIFIC_PATH_NODE_SHAPE_REPRE SENTATION -
SPECIFIC_PATH_NODE_SHAPE_REPRESENTATION/is_shape_of	ND	ND_SPECIFIC_PATH_NODE_SHAPE_REPRESENTATION/is_shape_of->
	ND	ND_SPECIFIC_PATH_NODE
SPECIFIC_PATH_NODE_SHAPE_REPRESENTATION/has_style	ND	ND_SPECIFIC_PATH_NODE_SHAPE_REPRESENTATION/specific_path_node_shape_represen-tation_style->
	11	enumeration
SPECIFIC_PATH_NODE_SHAPE_REPRESENTATION/is_represented_by	ND	ND_SPECIFIC_PATH_NODE_SHAPE_REPRESENTATION/is_represented_by->
	41	identifier
SPECIFIC_DISTRIBUTION_END_SHAPE_REPRESENTATION	43	REPRESENTATION
	ND	ND_SPECIFIC_DISTRIBUTION_END_SHAPE_REPRE-SENTTATION
SPECIFIC_DISTRIBUTION_END_SHAPE_REPRESENTATION/is_shape_of	ND	ND_SPECIFIC_DISTRIBUTION_END_SHAPE_REPRE-SENTATION/ is_shape_of->
	ND	ND_SPECIFIC_DISTRIBUTION_END
SPECIFIC_DISTRIBUTION_END_SHAPE_REPRESENTATION/has_style	ND	ND_SPECIFIC_DISTRIBUTION_END_SHAPE_REPRE-SENTATION/specific_distribution_end_shape_representation_style->
	11	enumeration
SPECIFIC_DISTRIBUTION_END_SHAPE_REPRESENTATION/is_represented_by	ND	ND_SPECIFIC_DISTRIBUTION_END_SHAPE_REPRE-SENTATION/ is_represented_by->
	41	identifier
ENGINEERING_PART_OCCURRENCE_SHAPE_REPRESENTATION	43	REPRESENTATION

	ND	ND_ENGINEERING_PART_OCCURRENCE_SHAPE_RE-PRESENTATION
ENGINEERING_PART_OCCURRENCE_SHAPE_REPRESENTATION/is_shape_of	ND	ND_ENGINEERING_PART_OCCURRENCE_SHAPE_RE-PRESENTATION/is_shape_of->
	ND	ND_ENGINEERING_PART_SHAPE
ENGINEERING_PART_OCCURRENCE_SHAPE_REPRESENTATION/has_type	ND	ND_ENGINEERING_PART_OCCURRENCE_SHAPE_RE-PRESENTATION/engineering_part_occurrence_shape_repre-sentation_type->
	11	enumeration
ENGINEERING_PART_OCCURRENCE_SHAPE_REPRESENTATION/has_style	ND	ND_ENGINEERING_PART_OCCURRENCE_SHAPE_RE-PRESENTATION/engineering_part_occurrence_shape_repre-sentation_style->
	11	ENUMERATION
ENGINEERING_PART_OCCURRENCE_SHAPE_REPRESENTATION/is_repre-sented_by	ND	ND_ENGINEERING_PART_OCCURRENCE_SHAPE_RE-PRESENTATION/ is_represented_by->
	41	identifier
PATH_ARC_SHAPE_REPRESENTATION	43	REPRESENTATION
	ND	ND_PATH_ARC_SHAPE_REPRESENTATION
PATH_ARC_SHAPE_REPRESENTATION/is_shape_of	ND	ND_PATH_ARC_SHAPE_REPRESENTATION/ is_shape_of->
	ND	ND_PATH_ARC
PATH_ARC_SHAPE_REPRESENTATION/has_style	ND	ND_PATH_ARC_SHAPE_REPRESENTATION/path_arc_shape_representation_style->
	11	enumeration
PATH_ARC_SHAPE_REPRESENTATION/is_represented_by	ND	ND_PATH_ARC_SHAPE_REPRESENTATION/is_represented_by->
	41	identifier
PATH_NODE_SHAPE_REPRESENTATION	43	REPRESENTATION
	ND	ND_PATH_NODE_SHAPE_REPRESENTATION
PATH_NODE_SHAPE_REPRESENTATION/is_shape_of	ND	ND_PATH_NODE_SHAPE_REPRESENTA-TION/is_shape_of->
	ND	ND_PATH_NODE
PATH_NODE_SHAPE_REPRESENTATION/has_style	ND	ND_PATH_NODE_SHAPE_REPRESENTATION/path_node_shape_representation_style->
	11	enumeration
PATH_NODE_SHAPE_REPRESENTATION/is_represented_by	ND	ND_PATH_NODE_SHAPE_REPRESENTATION/is_represented_by->
	41	identifier
DISTRIBUTION_END_OCCURRENCE_SHAPE_REPRESENTATION	43	REPRESENTATION
	ND	ND_DISTRIBUTION_END_OCCURRENCE_SHAPE_RE-PRESENTATION
DISTRIBUTION_END_OCCURRENCE_SHAPE_REPRESENTATION/is_shape_of	ND	ND_DISTRIBUTION_END_OCCURRENCE_SHAPE_RE-PRESENTATION/is_shape_of->
	ND	ND_DISTRIBUTION_END_OCCURRENCE
DISTRIBUTION_END_OCCURRENCE_SHAPE_REPRESENTATION/has_style	ND	ND_DISTRIBUTION_END_OCCURRENCE_SHAPE_RE-PRESENTATION/distribution_end_occurrence_shape_repre-sentation_style->
	11	enumeration
DISTRIBUTION_END_OCCURRENCE_SHAPE_REPRESENTATION/location_type	ND	ND_DISTRIBUTION_END_OCCURRENCE_SHAPE_RE-PRESENTATION/distribu-tion_end_occurrence_location_type->
	11	enumeration
DISTRIBUTION_END_OCCURRENCE_SHAPE_REPRESENTATION/is_represented_by	ND	ND_DISTRIBUTION_END_OCCURRENCE_SHAPE_RE-PRESENTATION/ is_represented_by->
	41	identifier
DISTRIBUTION_INTERCONNECTION_OCCURRENCE_SHAPE_REPRESENTATION	ND	ND_DISTRIBUTION_INTERCONNECTION_OCCURRENCE_SHAPE_REPRESENTATION
DISTRIBUTION_INTERCONNECTION_OCCURRENCE_SHAPE_REPRESENTATION/is_shape_of	ND	ND_DISTRIBUTION_INTERCONNECTION_OCCUR-RENCE_SHAPE_REPRESENTATION/ is_shape_of->
	ND	ND_DISTRIBUTION_INTERCONNECTION_OCCURRENCE
DISTRIBUTION_INTERCONNECTION_OCCURRENCE_SHAPE_REPRESENTATION/is_represented_by	ND	ND_DISTRIBUTION_INTERCONNECTION_OCCURRENCE_SHAPE_REPRESENTATION/ is_represented_by->
	41	identifier
ENGINEERING_PART_CENTER_OF_GRAVITY	43	REPRESENTATION
	ND	ND_ENGINEERING_PART_CENTER_OF_GRAVITY
ENGINEERING_PART_CENTER_OF_GRAVITY/founded_item	ND	ND_ENGINEERING_PART_CENTER_OF_GRAVITY/founded_item->
	42	GEOMETRY
	42	POINT
	42	CARTESIAN_POINT
ENGINEERING_PART_CENTER_OF_GRAVITY/rep_context	ND	ND_ENGINEERING_PART_CENTER_OF_GRAVITY/rep_con-text->
	ND	ND_SPECIFIC_ENGINEERING_PART_REPRESENTATION_CONTEXT

HVAC_FAB_PIECE_BEND_BREAK_LINE_LAYOUT_GEOMETRY	NH	NH_HVAC_FAB_PIECE_BEND_BREAK_LINE_LAYOUT_ GEOMETRY<-
	42	geometric_curve_set
HVAC_FAB_PIECE_HOLE_PUNCH_LAYOUT_GEOMETRY	NH	NH_HVAC_FAB_PIECE_HOLE_PUNCH_LAYOUT_GEO-METRY<-
	42	geometric_curve_set
HVAC_FABRICATION_PIECE_CUTTING_GEOMETRY	NH	NH_HVAC_FABRICATION_PIECE_CUTTING_GEOMETRY< -
	42	geometric_curve_set
SURFACE_ATTACHMENT_CONFIGURATION	ND	ND_ATTACHMENT_CONFIGURATION<-
	ND	ND_SURFACE_ATTACHMENT_CONFIGURATION
SURFACE_ATTACHMENT_CONFIGURATION/founded_item	ND	ND_SURFACE_ATTACHMENT_CONFIGURATION/founded_ item->
	42	GEOMETRY<-
	42	SURFACE
SURFACE_ATTACHMENT_CONFIGURATION/rep_context	ND	ND_SURFACE_ATTACHMENT_CONFIGURATION/rep_con-text->
	ND	ND_ATTACHMENT_REPRESENTATION_CONTEXT
LINEAL_ATTACHMENT_CONFIGURATION	ND	ND_ATTACHMENT_CONFIGURATION<-
	ND	ND_LINEAL_ATTACHMENT_CONFIGURATION
LINEAL_ATTACHMENT_CONFIGURATION/founded_item	ND	ND_LINEAL_ATTACHMENT_CONFIGURATION/founded_ item->
	42	GEOMETRY<-
	42	CURVE
LINEAL_ATTACHMENT_CONFIGURATION/rep_context	ND	ND_LINEAL_ATTACHMENT_CONFIGU-RATION/rep_con-text->
	ND	ND_ATTACHMENT_REPRESENTATION_CONTEXT
POINT_ATTACHMENT_CONFIGURATION	ND	ND_ATTACHMENT_CONFIGURATION<-
	ND	ND_POINT_ATTACHMENT_CONFIGURATION
POINT_ATTACHMENT_CONFIGURATION/founded_item	ND	ND_POINT_ATTACHMENT_CONFIGURATION/founded_ item->
	42	GEOMETRY<-
	42	POINT<-
	42	CARTESIAN_POINT
POINT_ATTACHMENT_CONFIGURATION/rep_context	ND	ND_POINT_ATTACHMENT_CONFIGU-RATION/rep_context- >
	ND	ND_ATTACHMENT_REPRESENTATION_CONTEXT

5.1.14 Path

ARM ENTITY/attribute	ISO 10303 Part	AIM ENTITY/attribute
PATH_ARC	ND	ND_PATH_ARC
PATH_ARC/path_arc_id	ND	ND_PATH_ARC/path_arc_id->
	41	identifier
PATH_ARC/path_arc_type	ND	ND_PATH_ARC/path_arc_type->
	11	ENUMERATION
PATH_NODE	ND	ND_PATH_NODE
PATH_NODE/id	ND	ND_PATH_NODE/path_node_id->
	41	identifier
PATH_SPLIT	ND	ND_PATH_SPLIT
PATH_SPLIT/path_split_id	ND	ND_PATH_SPLIT/id->
	41	identifier
PATH_SPLIT/located_by	ND	ND_PATH_SPLIT/located_by->
	ND	ND_DISTRIBUTION_END_OCCURRENCE
PATH_SPLIT/groups	ND	ND_PATH_SPLIT/groups->
	ND	ND_DISTRIBUTION_END_OCCURRENCE
SPECIFIC_PATH_ARC	ND	ND_SPECIFIC_PATH_ARC
SPECIFIC_PATH_ARC/id	ND	ND_SPECIFIC_PATH_ARC/specific_path_arc_id->
	41	identifier
SPECIFIC_PATH_ARC/type	ND	ND_SPECIFIC_PATH_ARC/specific_path_arc_type->
	11	enumeration
SPECIFIC_PATH_NODE/id	ND	ND_SPECIFIC_PATH_NODE/specific _path_node_id- >
	41	identifier 41

5.1.15 Controls

ARM ENTITY/attribute	ISO 10303 Part	AIM ENTITY/attribute
CONDITION_SIGNAL	ND	ND_CONDITION_SIGNAL
CONDITION_SIGNAL/produced_by	ND	ND_CONDITION_SIGNAL/produced_by->
	ND	ND_INSTRUMENT_OCCURRENCE
CONDITION_SIGNAL/activates	ND	ND_CONDITION_SIGNAL/activates->
	ND	ND_INDICATOR_ALARM
CONDITION_SIGNAL/has_id	ND	ND_CONDITION_SIGNAL/has_id->
	41	identifier
CONTROLLED_OBJECT	ND	ND_CONTROLLED_OBJECT
CONTROLLED_OBJECT/is_instance_of1	ND	ND_CONTROLLED_OBJECT/is_instance_of1->
	ND	ND_ENGINEERING_PART_OCCURRENCE
CONTROLLED_OBJECT/is_instance_of2	ND	ND_CONTROLLED_OBJECT/is_instance_of2->
	ND	ND_COMPARTMENT_OCCURRENCE
CONTROLLED_OBJECT/is_instance_of3	ND	ND_CONTROLLED_OBJECT/is_instance_of3->
	ND	ND_ZONE_OCCURRENCE
CONTROLLED_OBJECT/has_parameters	ND	ND_CONTROLLED_OBJECT/has_parameters->
	ND	ND_CONTROL_PARAMETER
CONTROLLER	ND	ND_CONTROLLER
CONTROLLER/receives	ND	ND_CONTROLLER/receives->
	ND	ND_CONDITION_SIGNAL
CONTROLLER/sets	ND	ND_CONTROLLER/sets->
	ND	ND_PARAMETER_CONTROL
CONTROLLER/is_instance_of1	ND	ND_CONTROLLER/is_instance_of1->
	ND	ND_CONTROL_DEVICE_OCCURRENCE
CONTROLLER/is_instance_of2	ND	ND_CONTROLLER/is_instance_of2->
	ND	ND_RESPONSIBLE_PERSON
CONTROL_PARAMETER	ND	ND_CONTROL_PARAMETER
CONTROL_PARAMETER/has_name	ND	ND_CONTROL_PARAMETER/has_name->
	41	text
CONTROL_PARAMETER/has_set_point_value	ND	ND_CONTROL_PARAMETER/has_set_point_value->
	11	real
CONTROL_PARAMETER/has_minimum	ND	ND_CONTROL_PARAMETER/has_minimum->
	11	real
CONTROL_PARAMETER/has_maximum	ND	ND_CONTROL_PARAMETER/has_maximum->
	11	real
CONTROL_PARAMETER/has_units	ND	ND_CONTROL_PARAMETER/has_units->
	41	text
DETECTED_CONTROL_PARAMETER	ND	ND_CONTROL_PARAMETER<-
	ND	ND_DETECTED_CONTROL_PARAMETER
DETECTED_CONTROL_PARAMETER/detected_by	ND	ND_DETECTED_CONTROL_PARAMETER/detected_by->
	ND	ND_PARAMETER_MEASUREMENT_INSTRUMENT
INTERLOCK	ND	ND_INTERLOCK
INTERLOCK/trigger_of	ND	ND_INTERLOCK/trigger_of->
	ND	ND_PARAMETER_CONTROL
INTERLOCK/sets	ND	ND_INTERLOCK/sets->
	ND	ND_PARAMETER_CONTROL
PARAMETER_CONTROL	ND	ND_PARAMETER_CONTROL
PARAMETER_CONTROL/triggers	ND	ND_PARAMETER_CONTROL/triggers->
	ND	ND_INTERLOCK
PARAMETER_CONTROL/triggered_by	ND	ND_PARAMETER_CONTROL/triggered_by->
	ND	ND_INTERLOCK
PARAMETER_CONTROL/sets	ND	ND_PARAMETER_CONTROL/sets->
	ND	ND_SET_CONTROL_PARAMETER
RESPONSIBLE_PERSON	ND	ND_RESPONSIBLE_PERSON
RESPONSIBLE_PERSON/has_id	ND	ND_RESPONSIBLE_PERSON/has_id->
	41	identifier
SET_CONTROL_PARAMETER	ND	ND_CONTROL_PARAMETER<-
	ND	ND_SET_CONTROL_PARAMETER
SET_CONTROL_PARAMETER/set_by	ND	ND_SET_CONTROL_PARAMETER/set_by
	ND	ND_PARAMETER_CONTROL

5.2 AIM EXPRESS short listing

```
(*********************************************)
SCHEMA   niddesc_hvac_application_protocol_v1_0;
(*October, 1995*)
(*********************************************)

USE FROM geometric_model_schema (
      geometric_set,
      geometric_curve_set,
      geometric_set_replica,
      solid_model,
      manifold_solid_brep,
      csg_primitive,
      csg_select,
      csg_solid,
      sphere,
      right_circular_cone,
      right_circular_cylinder,
      torus,
      block,
      right_angular_wedge,
      boolean_operator,
      boolean_result);

USE FROM geometry_schema (
      placement,
      axis1_placement,
      axis2_placement,
            axis2_placement_2D,
            axis2_placement_3D,
      curve,
      bounded_curve,
      b_spline_curve,
      polyline,
      trimmed_curve,
      conic,
      circle,
      ellipse,
      hyperbola,
      parabola,
      line,
      point,
      cartesian_point,
      point_on_curve,
      cartesian_transformation_operator,
      vector,
      direction);

USE FROM topology_schema (
      topological_representation_item,
      connected_edge_set,
      connected_face_set,
      face,
      face_bound,
      loop,
```

```
    edge,
    edge_loop,
    poly_loop,
    vertex_loop,
    path,
    closed_shell,
    open_shell,
    vertex_shell,
    wire_shell,
    vertex,
    vertex_point);

USE FROM representation_schema (
    geometric_representation_item, representation,
    representation_context, representation_context_association,
    representation_relationship, representation_replica,
    transformation);

USE FROM generic_measures_schema (
    length_measure,
    plane_angle_measure,
    thermodynamic_temperature_measure,
    velocity_measure,
    pressure_measure,
    flow_rate_measure,
    force_measure,
    heat_rate_measure,
    noise_measure,
    inertia_measure,
    product_of_inertia_measure,
    power_measure,
    frequency_measure,
    linear_stiffness_measure,
    angular_stiffness_measure,
    relative_humidity_measure,
    real_type,
    voltage_measure,
    volume_measure,
    torque_measure,
    time_measure,
    electric_current_measure,
    KVA_measure,
    luminous_intensity_measure,
    resistance_measure);
USE FROM support_resource_schema (identifier, label, text);
USE FROM product_definition_schema (product, product_version);
USE FROM person_organization_schema (person_and_organization, person, organization);
USE FROM date_time_schema (date_and_time);
USE FROM approval_schema (approval_status);
USE FROM external_reference_schema (externally_defined_item, external_source);
USE FROM niddesc_ship_structural_schema (ns_structural_part_occurrence);

(* Begin Defined Types *)

TYPE nd_actuator_type=ENUMERATION OF (manual, hydraulic, pneumatic, solenoid, motor, user_supplied);
END_TYPE;
```

```
TYPE nd_distribution_end_location_type = ENUMERATION OF (nd_true, nominal);
END_TYPE;

TYPE nd_path_arc_type = ENUMERATION OF (line, arc);
END_TYPE;

TYPE nd_power_type = ENUMERATION OF (AC, DC, hydr, mech, pnum);
END_TYPE;

TYPE nd_length_value = SELECT (length_measure, real_type);
END_TYPE;

TYPE nd_angle_value = SELECT (plane_angle_measure, real_type);
END_TYPE;

TYPE nd_temperature_value = SELECT (thermodynamic_temperature_measure, real_type);
END_TYPE;

TYPE nd_velocity_value = SELECT (velocity_measure, real_type);
END_TYPE;

TYPE nd_pressure_value = SELECT (pressure_measure, real_type);
END_TYPE;

TYPE nd_flow_rate_value = SELECT (flow_rate_measure, real_type);
END_TYPE;

TYPE nd_heat_rate_value = SELECT (heat_rate_measure, real_type);
END_TYPE;

TYPE nd_noise_value = SELECT (noise_measure, real_type);
END_TYPE;

TYPE nd_force_value = SELECT (force_measure, real_type);
END_TYPE;

TYPE nd_inertia_value = SELECT (inertia_measure, real_type);
END_TYPE;

TYPE nd_product_of_inertia_value = SELECT (product_of_inertia_measure,
real_type);
END_TYPE;

TYPE nd_weight_value = SELECT (force_measure, real_type);
END_TYPE;

TYPE nd_power_value = SELECT (power_measure, real_type);
END_TYPE;

TYPE nd_frequency_value = SELECT (frequency_measure, real_type);
END_TYPE;

TYPE nd_voltage_value = SELECT (voltage_measure, real_type);
END_TYPE;

TYPE nd_linear_stiffness_value = SELECT (linear_stiffness_measure, real_type);
END_TYPE;
```

```
TYPE nd_angular_stiffness_value = SELECT (angular_stiffness_measure, real_type);
END_TYPE;

TYPE nd_bending_stiffness_value = SELECT (angular_stiffness_measure, real_type);
END_TYPE;

TYPE nd_relative_humidity_value = SELECT (relative_humidity_measure, real_type);
END_TYPE;

TYPE nd_volume_value = SELECT (volume_measure, real_type);
END_TYPE;

TYPE nh_fab_part_bend_break_geometry = string;
END_TYPE;

TYPE ENTITY_nh_fab_part_cutting_geometry = string;
END_TYPE;

TYPE nh_fab_part_hole_geometry = string;
END_TYPE;

TYPE nd_assembly_instruction_type = ENUMERATION OF(assem,instal,coat,insul);
END_TYPE;

TYPE nd_attached_penetrating_object = SELECT (ns_structural_part_occurrence, nd_engineering_part_occurrence,
nd_distribution_interconnection_occurrence);
END_TYPE;

TYPE nd_attaching_penetrated_object = SELECT (ns_structural_part_occurrence, nd_engineering_part_occurrence,
nd_attaching_part_occurrence);
END_TYPE;

TYPE nd_attachment_configuration_function = ENUMERATION OF(bolt_hole,adhesive_area,weld_joint);
END_TYPE;

TYPE nd_space_type = TEXT;
END_TYPE;

TYPE nl_reference_definition_source = ENUMERATION OF(internal,external);
END_TYPE;

TYPE nl_externally_defined_item_shape_definition_type = ENUMERATION OF(macro, parametric, defined_shape);
END_TYPE;

TYPE nl_externally_defined_item_reference_type = ENUMERATION OF(library, exchange_data_set, unspecified);
END_TYPE;

TYPE nd_code_base = ENUMERATION OF (ESWBS, SWBS, HSC);
END_TYPE;

TYPE nd_compartment_boundary_side = ENUMERATION OF (above,below,forward,aft,port,starboard);
END_TYPE;

TYPE nh_compartment_condition_name = ENUMERATION OF(heat,cool);
END_TYPE;

TYPE nh_cps_zone_protection_level = ENUMERATION OF(tp,lp);
END_TYPE;
```

```
TYPE nh_duct_heater_use = ENUMERATION OF(PRE,RE);
END_TYPE;

TYPE nh_duct_seam_type = ENUMERATION OF(pitts,weld,
      riveted_lap,grooved_lock,riveted_corner,
      corner_double_seam_lock,standing,other);
END_TYPE;

TYPE nd_required_shock_classification = ENUMERATION OF(A,B,C);
END_TYPE;

TYPE nd_source = ENUMERATION OF(gfe,cfe);
END_TYPE;

TYPE nd_fastener_set_type = ENUMERATION OF(pipe,hvac,elec,cableway,mech);
END_TYPE;

TYPE nd_light_intensity_value = SELECT (luminous_intensity_measure, real_type);
END_TYPE;

TYPE nh_hvac_port_state_flow_direction = ENUMERATION OF(with,against);
END_TYPE;

TYPE nh_humidistat_required = BOOLEAN;
END_TYPE;

TYPE nh_hvac_assembly_type = ENUMERATION OF(fab,install);
END_TYPE;

TYPE nh_hvac_fastener_type = ENUMERATION OF(sheet_metal_screw,
      rivet,gasket,cleat,thermal_fit_band,duct_sealant);
END_TYPE;

TYPE nh_hvac_flow_control_device_condition = ENUMERATION OF(open,closed,
      throttled,locked_open,locked_closed);
END_TYPE;

TYPE nh_hvac_joint_type = ENUMERATION OF(butt,slip,flanged,lapped,hook);
END_TYPE;

TYPE nh_hvac_load_type = ENUMERATION OF(solar_surface,outside_air);
END_TYPE;

TYPE nh_hvac_fan_coil_type = ENUMERATION OF(duct_coil,grav_coil,unit_cool,FCA,fan);
END_TYPE;

TYPE nh_joining_type_name = ENUMERATION OF(weld,solder,lapped_rivet,
   sheet_metal_screw,flange,cleat);
END_TYPE;

TYPE nh_joint_tightness_name = ENUMERATION OF(air,water,non_water,drip);
END_TYPE;

TYPE nh_hvac_port_type = ENUMERATION OF (slip_on,slip_over,butt,hook,other);
END_TYPE;
```

```
TYPE nh_test_type = ENUMERATION OF (sys_op_comp,sys_perf_bal,pz_integ,wt_clos,air_noise,ac_load);
END_TYPE;

TYPE nh_turn_elbow_type = ENUMERATION OF (elbow,mult_elb_dir_chg,mult_elb_same_dir,
                        vaned_turn,turn,ogee);
END_TYPE;

TYPE nd_maintenance_worthy = BOOLEAN;
END_TYPE;
TYPE nd_medium_flow_condition = text;
END_TYPE;

TYPE nh_opening_shape_type = ENUMERATION OF(rect,round,tri,flat_oval,oval);
END_TYPE;

TYPE nd_personnel_category_name = text;
END_TYPE;

TYPE nh_flow_control_device_type = ENUMERATION OF(SCD,FD, PCV,WTC,ABV,DS,DD);
END_TYPE;

TYPE nh_specific_hvac_turn_elbow_type = ENUMERATION OF(elbow,
      multiple_elbow_dir_change,multiple_elbow_same_dir,vaned_turn,ogee);
END_TYPE;

TYPE nh_xsect_type_name = ENUMERATION OF(rect,round,flat_oval,rad_corner);
END_TYPE;

TYPE nh_sealant_type_name = ENUMERATION OF(thermal_fit_band,duct_sealant,none);
END_TYPE;

TYPE nh_thickness_gauge_format = ENUMERATION OF (inch, gage, SWG, others);
END_TYPE;

TYPE nh_damage_control_class = ENUMERATION OF(W,c_W,X,c_X,Z,c_Z);
END_TYPE;

TYPE n_identifier = identifier;
END_TYPE;

(*********************************************)
(* Begin Configuration Management Definitions *)
(*********************************************)

ENTITY ncm_approval_status
      SUBTYPE OF(approval_status);
END_ENTITY;

ENTITY ncm_date_and_time
      SUBTYPE OF (date_and_time);
END_ENTITY;

ENTITY ncm_person_and_organization
      SUBTYPE OF (person_and_organization);
END_ENTITY;
```

```
ENTITY ncm_organization
      SUBTYPE OF(organization);
END_ENTITY;

TYPE ncm_cost=real;
END_TYPE;
TYPE ncm_change_status= ENUMERATION OF (incorporated, not_incorporated);
END_TYPE;
TYPE ncm_creation_modification_deletion_event_type = ENUMERATION OF (c, m, d);
END_TYPE;
TYPE ncm_promotion_level = ENUMERATION OF (working, preliminary, issued);
END_TYPE;
TYPE ncm_reservation_flag = ENUMERATION OF (reserved, unreserved);
END_TYPE;
TYPE ncm_spiv_relationship_type=ENUMERATION OF
(a,huge,ncm_list,n_of,stuff,to_be,added,later);
END_TYPE;
TYPE ncm_approval_flag = ENUMERATION OF (unapproved, approved, rejected);
END_TYPE;

TYPE ncm_change_type = ENUMERATION OF (contract_directed_change, contract_HMR, contract_FMR,
                        non_contract_RFW, non_contract_RFD, non_contract_REA);
END_TYPE;

ENTITY ncm_ship_product_item
      SUBTYPE OF (product);
      has_versions   : SET [1:?] OF ncm_ship_product_item_version;
END_ENTITY;

ENTITY ncm_ship_product_item_version;
      is_version_for                  : ncm_ship_product_item;
      has_version                     : n_identifier;
      has_reference_definition_source : l_reference_definition_source;
      has_transfer                    : OPTIONAL SET [1:?] OF ncm_transfer_event;
UNIQUE
UR1: is_version_for,
      has_version;
END_ENTITY;

ENTITY ncm_generic_spiv
      SUBTYPE OF (ncm_ship_product_item_version);
END_ENTITY;

ENTITY ncm_specific_spiv
      SUBTYPE OF (ncm_ship_product_item_version);
      physically_manifested_by        : OPTIONAL ncm_physical_spiv;
      may_be_used_in                  : OPTIONAL SET [1:?] OF ncm_hull;
END_ENTITY;

ENTITY ncm_occurrence_spiv
      SUBTYPE OF (ncm_ship_product_item_version);
      physically_manifested_by        : OPTIONAL ncm_physical_occurrence_spiv;
END_ENTITY;

ENTITY ncm_physical_spiv
      SUBTYPE OF (ncm_ship_product_item_version);
      physical_manifestation_of       : ncm_specific_spiv;
```

```
    used_at                          : OPTIONAL ncm_physical_occurrence_spiv;
END_ENTITY;

ENTITY ncm_physical_occurrence_spiv
    SUBTYPE OF (ncm_ship_product_item_version);
    physical_manifestation_of        : ncm_occurrence_spiv;
    uses                             : OPTIONAL ncm_physical_spiv;
END_ENTITY;

ENTITY ncm_context_spiv
    SUBTYPE OF (ncm_ship_product_item_version);
    is_context_of          : OPTIONAL SET [1:?] OF ncm_spiv_relationship;
    has_owner              : OPTIONAL ncm_person_and_organization;
END_ENTITY;

ENTITY ncm_component_spiv
    SUBTYPE OF (ncm_ship_product_item_version);
    is_component_in        : OPTIONAL SET [1:?] OF ncm_spiv_relationship;
END_ENTITY;

ENTITY ncm_hull;
    has_applicable_occurrence                : OPTIONAL SET[1:?] OF ncm_occurrence_spiv;
    has_applicable_physical_occurrence:        OPTIONAL SET[1:?] OF ncm_physical_occurrence_spiv;
    has_hull_id                              : n_identifier;
UNIQUE
UR1: has_hull_id;
END_ENTITY;

ENTITY ncm_spiv_relationship;
    has_context_of             : ncm_context_spiv;
    has_component_of           : ncm_component_spiv;
    has_type                   : ncm_spiv_relationship_type;
    has_reservation            : OPTIONAL ncm_reservation_event;
UNIQUE
UR1: has_context_of, has_component_of, has_type;
END_ENTITY;

ENTITY ncm_creation_modification_deletion_event;
    occurred_at                                : ncm_date_and_time;
    performed_by                               : OPTIONAL ncm_person_and_organization;
    checked_by                                 : OPTIONAL ncm_person_and_organization;
    has_description                            : OPTIONAL text;
    has_type                                   : ncm_creation_modification_deletion_event_type;
    part_of                                    : OPTIONAL ncm_change;
    causes_creation_modification_deletion_of  :ncm_ship_product_item_version;
    uses_as_baseline                           : OPTIONAL ncm_ship_product_item_version;
UNIQUE
UR1: occurred_at, causes_creation_modification_deletion_of;
END_ENTITY;

ENTITY ncm_promotion_event;
    event_occurs       : ncm_date_and_time;
    has_level          : ncm_promotion_level;
    promoted           : ncm_promotion_of_spiv;
UNIQUE
UR1: event_occurs, has_level;
END_ENTITY;
```

```
ENTITY ncm_promotion_of_SPIV;
    promoted                : ncm_ship_product_item_version;
    event                   : ncm_promotion_event;
UNIQUE
UR1: promoted, event;
END_ENTITY;

ENTITY ncm_configuration_change;
    incorporates            : ncm_change;
    is_incorporated_in      : ncm_configuration_spiv;
    has_status              : ncm_change_status;
UNIQUE
UR1: incorporates, is_incorporated_in;
END_ENTITY;

ENTITY ncm_change;
    change_id               : n_identifier;
    status                  : ncm_change_status_event:
    can_be_satisfied_by     : OPTIONAL SET[1:?] OF ncm_change_alternative;
    has_chosen                  : OPTIONAL ncm_change_alternative;
    authorizing_authority       : ncm_person_and_organization;
    change_type                 : ncm_change_type;
    organization_change_id      : SET[1:?] OF n_identifier;
    adjudicated_cost            : OPTIONAL ncm_cost;
UNIQUE
UR1: change_id;
END_ENTITY;

ENTITY ncm_organization_change;
    id                      : n_identifier;
    organization            : ncm_organization;
UNIQUE
UR1: id, organization;
END_ENTITY;

ENTITY ncm_change_status_event;
    occurred                : ncm_date_and_time;
    status                  : ncm_change_status;
UNIQUE
UR1: occurred, status;
END_ENTITY;

ENTITY ncm_change_alternative;
    id                                          : n_identifier;
    estimated                                   : OPTIONAL ncm_cost;
    potentially_impacts: OPTIONAL SET[1:?] OF   : ncm_potential_spiv_change;
UNIQUE
UR1: id;
END_ENTITY;

ENTITY ncm_potential_spiv_change;
    of_alternative          : ncm_change_alternative;
    of_spiv                 : ncm_ship_product_item_version;
UNIQUE
UR1: of_alternative, of_spiv;
END_ENTITY;
```

```
ENTITY ncm_configuration_spiv
    SUBTYPE OF (ncm_context_spiv);
    has_owner                    : ncm_person_and_organization;
    is_approval_context_for :    : OPTIONAL SET[1:?] OF ncm_approval_relationship;
END_ENTITY;

ENTITY ncm_approval_relationship
    SUBTYPE OF(ncm_spiv_relationship);
    has_events                   : SET [1:?] OF ncm_approval_event;
END_ENTITY;

ENTITY ncm_approval_event;
    assigned_on                  : ncm_date_and_time;
    status                       : ncm_approval_flag;
UNIQUE
UR1: assigned_on,status;
END_ENTITY;

ENTITY ncm_reservation_event;
    has_date_time          : OPTIONAL ncm_date_and_time;
    has_description        : OPTIONAL text;
    has_state              : ncm_reservation_flag;
    has_id                 : identifier;
UNIQUE
UR1:    has_id;
END_ENTITY;

ENTITY ncm_transfer_event;
    sent_to                : SET [1:?] OF ncm_person_and_organization;
    has_date_time          : ncm_date_and_time;
    for_spiv               : SET [1:?] OF ncm_ship_product_item_version;
UNIQUE
UR1: sent_to, has_date_time;
END_ENTITY;

(*********************************************)
(* Begin Distribution Systems Entity Definitions *)
(*********************************************)

ENTITY nd_ac_power_characteristics
    SUBTYPE OF (nd_power_characteristic);
    has_voltage                  : nd_voltage_value;
    has_frequency                : nd_frequency_value;
    has_number_of_phases         : integer;
END_ENTITY;

ENTITY nd_assembly_assembly_instruction
    SUBTYPE OF (nd_assembly_instruction);
END_ENTITY;

ENTITY nd_assembly_coating_instruction
    SUBTYPE OF (nd_assembly_instruction);
END_ENTITY;

ENTITY nd_assembly_installation_instruction
    SUBTYPE OF (nd_assembly_instruction);
END_ENTITY;
```

```
ENTITY nd_assembly_insulation_instruction
      SUBTYPE OF (nd_assembly_instruction);
END_ENTITY;

ENTITY nd_assembly_end_port;
   of_assembly                  : nh_hvac_assembly_occurrence;
   of_end                       : nd_distribution_end_occurrence;
UNIQUE
UR1: of_assembly,
    of_end;
END_ENTITY;

ENTITY nd_assembly_instruction;
      assembly_instruction_description       : OPTIONAL text;
      assembly_instruction_number            : integer;
      assembly_instruction_type              : label;
UNIQUE
UR1                                          : assembly_instruction_number,
                                             : assembly_instruction_type;
END_ENTITY;

ENTITY nd_assembly_occurrence
      SUBTYPE OF (nd_product_spiv_occurrence);
END_ENTITY;

ENTITY nd_attachment_configuration;
      attachment_configuration_id                  : n_identifier;
      attachment_configuration_function            : nd_attachment_configuration_function;
      attachment_configuration_dimensionality      :integer;
      has_surf_config                              : OPTIONAL face;
      has_line_config                              : OPTIONAL edge;
      has_pnt_config                               : OPTIONAL vertex;
UNIQUE
UR1: attachment_configuration_id;
WHERE
WR1: NOT(EXISTS (has_surf_config) AND EXISTS(has_line_config))
       AND NOT (EXISTS(has_line_config) AND EXISTS(has_pnt_config))
       AND NOT (EXISTS(has_surf_config) AND EXISTS(has_pnt_config));
END_ENTITY;

ENTITY nd_attachment_end_occurrence
      SUBTYPE OF (nd_end_spiv_occurrence);
END_ENTITY;

ENTITY nd_dependent_attachment_end
      SUBTYPE OF (nd_attachment_end_occurrence);
      is_dependent_end_in          : nd_attachment_occurrence;
      attaches                     : nd_attaching_penetrated_object;
UNIQUE
  UR1: is_dependent_end_in, attaches;
END_ENTITY;

ENTITY nd_independent_attachment_end
      SUBTYPE OF (nd_attachment_end_occurrence);
      is_independent_end_in        : nd_attachment_occurrence;
      attached                     : nd_attached_penetrating_object;
UNIQUE
```

```
  UR1: is_independent_end_in, attached;
END_ENTITY;

ENTITY nd_attaching_part_occurrence
      SUBTYPE OF (nd_discrete_part_occurrence);
END_ENTITY;

ENTITY nd_attachment_occurrence
      SUBTYPE OF (nd_interface_spiv_occurrence);
      has_dependent_end                 : nd_dependent_attachment_end;
      has_independent_end               : nd_independent_attachment_end;
      positionally_dependent_on         : OPTIONAL nd_attachment_positional_dependency;
      gives_position_to                 : OPTIONAL nd_attachment_positional_dependency;
END_ENTITY;

ENTITY nd_attachment_positional_dependency;
      has_dependent_attachment_of           : nd_attachment_occurrence;
      has_independent_attachment_of         : nd_attachment_occurrence;
UNIQUE
UR1: has_dependent_attachment_of,
      has_independent_attachment_of;
END_ENTITY;

ENTITY nl_internal_SPIV
      SUBTYPE OF(ncm_ship_product_item_version);
END_ENTITY;

ENTITY nl_external_SPIV
      SUBTYPE OF(ncm_ship_product_item_version);
      has_definition_of         : nl_externally_defined_item;
END_ENTITY;

ENTITY nl_externally_defined_item
      SUBTYPE OF(externally_defined_item);
       has_shape_definition_type   : nl_externally_defined_item_shape_definition_type;
      has_reference_type             : nl_externally_defined_item_reference_type;
END_ENTITY;

ENTITY nd_control_device_occurrence
      SUBTYPE OF (nd_device_occurrence);
END_ENTITY;

ENTITY nd_dc_power_characteristics
      SUBTYPE OF (nd_power_characteristic);
      has_dc_voltage                 : nd_voltage_value;
END_ENTITY;

ENTITY nd_device_occurrence
      SUBTYPE OF (nd_engineering_part_occurrence);
END_ENTITY;

ENTITY nd_discrete_part_occurrence
      SUBTYPE OF (nd_engineering_part_occurrence);
END_ENTITY;

ENTITY nd_discrete_system_occurrence
      SUBTYPE OF (nd_engineering_system_occurrence);
END_ENTITY;
```

```
ENTITY nd_distribution_end_occurrence
      SUBTYPE OF (nd_end_spiv_occurrence);
      is_occurrence_of              : nd_specific_distribution_end;
      gets_location_from                  : nd_path_node;
      has_shape_of                  : OPTIONAL SET [1:?] OF nd_distribution_end_occurrence_shape_representation;
      of_assembly_end_port          : OPTIONAL SET [1:?] OF nd_assembly_end_port;
      of_interconnection            : OPTIONAL nd_distribution_interconnection_occurrence;
END_ENTITY;

ENTITY nd_distribution_interconnection_occurrence
      SUBTYPE OF (nd_interface_spiv_occurrence);
      gets_cl_geometry_ from        :SET [1:?] OF nd_path_arc;
END_ENTITY;

ENTITY nd_distribution_interface_occurrence
      SUBTYPE OF (nd_interface_spiv_occurrence);
END_ENTITY;

ENTITY nd_distribution_part_occurrence
      SUBTYPE OF (nd_engineering_part_occurrence);
      gets_cl_geom_from_path_arc       : SET [1:?] OF nd_path_arc;
END_ENTITY;

ENTITY nd_distribution_system_occurrence
      SUBTYPE OF (nd_engineering_system_occurrence);
END_ENTITY;

ENTITY nd_end_spiv_occurrence
      SUBTYPE OF (ncm_occurrence_spiv);
END_ENTITY;

ENTITY nd_engineering_part_identifier;
      part_number_organization_id             : n_identifier;
      organization_part_number                : n_identifier;
UNIQUE
UR1: part_number_organization_id;
    organization_part_number;
END_ENTITY;

ENTITY nd_engineering_part_occurrence
      SUBTYPE OF (nd_product_spiv_occurrence);
      has_shape_of        : OPTIONAL SET [1:?] OF nd_engineering_part_occurrence_shape_representation;
      has_envelope        : OPTIONAL SET [1:?] OF nd_part_envelope_occurrence_shape_representation;
      is_insulated_by     : OPTIONAL SET [1:?] OF nd_insulation_part_occurrence;
      connects_at         : OPTIONAL SET [1:?] OF nh_hvac_port_occurrence;
      is_occurrence_of    : d_specific_engineering_part;
END_ENTITY;

ENTITY nd_engineering_part_occurrence_design
      SUBTYPE OF (nd_engineering_part_occurrence);
      required_shock_class                    : OPTIONAL text;
      drawing_number_organization_id          : OPTIONAL n_identifier;
      functional_code                         : OPTIONAL nd_functional_identifier;
      service                                 : OPTIONAL text;
      organization_drawing_number             :  OPTIONAL n_identifier;
      maximum_allowable_weight                : OPTIONAL nd_weight_value;
      location_description                    : OPTIONAL text;
```

```
END_ENTITY;

ENTITY nd_engineering_part_occurrence_implementation
    SUBTYPE OF (nd_engineering_part_occurrence);
    maintain_if                     : OPTIONAL nd_maintenance_worthy;
END_ENTITY;

ENTITY nd_engineering_system_occurrence
    SUBTYPE OF (nd_product_spiv_occurrence);
    functional_code                 : OPTIONAL nd_functional_identifier;
END_ENTITY;

ENTITY nd_envelope_occurrence
    SUBTYPE OF (nd_space_spiv_occurrence);
END_ENTITY;

ENTITY nd_equipment_applicable_specifications;
    applicable_specification            : n_identifier;
UNIQUE
UR1: applicable_specification;
END_ENTITY;

ENTITY nd_equipment_fixed_mounting_data
    SUBTYPE OF (nd_equipment_mounting_data);
    mounting_surface_thickness      : OPTIONAL nd_length_value;
    fixed_mount_type                : OPTIONAL text;
END_ENTITY;

ENTITY nd_equipment_installation_instruction;
    installation_instruction_id     : n_identifier;
UNIQUE
UR1: installation_instruction_id;
END_ENTITY;

ENTITY nd_equipment_interchangeability;
    has_eq_description      : text;
    n_of                    : nd_specific_equipment_implementation;
UNIQUE
UR1: has_eq_description,
    n_of;
END_ENTITY;

ENTITY nd_equipment_mounting_data;
    n_of                    : nd_equipment_occurrence_implementation;
    is_represented_by       : n_identifier;
UNIQUE
UR1: is_represented_by;
END_ENTITY;

ENTITY nd_equipment_occurrence
    SUBTYPE OF (nd_device_occurrence);
END_ENTITY;

ENTITY nd_equipment_occurrence_design
    SUBTYPE OF (nd_equipment_occurrence);
    system_conformance_specification_id         : OPTIONAL n_identifier;
    required_insulation_type                    : OPTIONAL label;
    required_insulation_thickness               : OPTIONAL nd_length_value;
```

```
    design_temperature                  : OPTIONAL nd_temperature_value;
    design_pressure                     : OPTIONAL nd_pressure_value;
    equipment_name                      : text;
    has_eq_operating_cond               : OPTIONAL SET [1:?] OF nd_equipment_operating_condition;
    has_eq_required_test                : OPTIONAL SET [1:?] OF nd_equipment_required_test;
    has_eq_applicable_spec :            : OPTIONAL SET [1:?] OF nd_equipment_applicable_specifications;
END_ENTITY;

ENTITY nd_equipment_occurrence_implementation
    SUBTYPE OF (nd_equipment_occurrence);
    has_removal_route :         : OPTIONAL SET [1:?] OF nd_equipment_removal_route_instruction;
    has_install_instruction     : OPTIONAL SET [1:?] OF nd_equipment_installation_instruction;
    has_eq_mounting_data        : OPTIONAL SET [1:?] OF nd_equipment_mounting_data;
END_ENTITY;

ENTITY nd_equipment_required_test;
    equipment_test      :n_identifier;
UNIQUE
UR1: equipment_test;
END_ENTITY;

ENTITY nd_equipment_resilient_mount_data
    SUBTYPE OF (nd_equipment_mounting_data);
    resilient_specification_id          : OPTIONAL n_identifier;
    shock_movement_direction            : OPTIONAL SET [1:?] OF nd_equipment_shock_movement_direction;
END_ENTITY;

ENTITY nd_equipment_removal_route_instruction;
    removal_route_instruction_id        : n_identifier;
    refers_to                           : OPTIONAL nd_removal_route_envelope_occurrence;
UNIQUE
UR1: removal_route_instruction_id;
END_ENTITY;

ENTITY nd_equipment_shock_movement_direction;
    shock_movement              : ector;
    product_of_inertia          : OPTIONAL nd_product_of_inertia_value;
    inertia                     :OPTIONAL nd_inertia_value;
    shock_movement_id           : n_identifier;
UNIQUE
UR1: shock_movement_id;
END_ENTITY;

ENTITY nd_equipment_system_operating_condition;
     has_dissipation_to_sw              : OPTIONAL nd_heat_rate_value;
    has_dissipation_to_fw               : OPTIONAL nd_heat_rate_value;
    has_dissipation_to_air              : OPTIONAL nd_heat_rate_value;
    has_flow_rates                      : OPTIONAL SET [1:?] OF nd_medium_flow;
    of_system_condition                 : nd_system_operating_condition;
    of_equipment_condition              : nd_equipment_operating_condition;
UNIQUE
UR1: of_system_condition,
    of_equipment_condition;
END_ENTITY;

ENTITY nd_fastener_quantity;
    fastener_quantity_value     : integer;
UNIQUE
```

```
UR1: fastener_quantity_value;
END_ENTITY;

ENTITY nd_fastener_set_occurrence;
    fastener_set_id      : n_identifier;
    fastener_set_        : text;
    is_occurrence_of     : nd_specific_fastener_set;
    used_by              : nd_interface_spiv_occurrence;
UNIQUE
UR1: fastener_set_id;
END_ENTITY;

ENTITY nd_fastener_set_usage;
    is_component_of        : nd_specific_fastener_set;
    has_member             : nd_fastener_usage;
UNIQUE
UR1: is_component_of, has_member;
END_ENTITY;

ENTITY nd_fastener_usage;
    has_fastener_quantity        : nd_fastener_quantity;
    has_specific_                : nd_specific_fastener;
    is_member_of                 : nd_fastener_set_usage;
UNIQUE
UR1:    has_fastener_quantity,
    has_specific_fastener;
END_ENTITY;

ENTITY nd_functional_identifier;
    has_code_base                : nd_code_base;
    has_value                    : text;
UNIQUE
UR1: has_code_base,    has_value;
END_ENTITY;

ENTITY nd_indicator_alarm
    SUBTYPE OF (nd_instrument_occurrence_implementation);
    low_value_alarm_setting              : OPTIONAL real;
    high_value_alarm_setting             : OPTIONAL real;
    instrument_alarm_value_units         : OPTIONAL text;
END_ENTITY;

ENTITY nd_instrument_occurrence
    SUBTYPE OF (nd_device_occurrence);
END_ENTITY;

ENTITY nd_instrument_occurrence_design
    SUBTYPE OF (nd_instrument_occurrence);
    nameplate_inscription              : OPTIONAL text;
END_ENTITY;

ENTITY nd_instrument_occurrence_implementation
    SUBTYPE OF (nd_instrument_occurrence);
END_ENTITY;

ENTITY nd_exterior_insulation_part
    SUBTYPE OF, (nd_insulation_part_occurrence);
END_ENTITY;
```

```
ENTITY nd_interior_insulation_part
    SUBTYPE OF (nd_insulation_part_occurrence);
    reduces_cross_section_of            : OPTIONAL nd_attached_penetrating_object;
END_ENTITY;

ENTITY nd_insulation_part_occurrence
    SUBTYPE OF (nd_attaching_part_occurrence);
END_ENTITY;

ENTITY nd_interface_spiv_occurrence_implementation
    SUBTYPE OF (nd_interface_spiv_occurrence);
END_ENTITY;

ENTITY nd_interface_spiv_occurrence
    SUBTYPE OF (ncm_occurrence_spiv);
    in_space_spiv          : OPTIONAL SET [1:?] OF nd_space_spiv_occurrence;
    has_end_spiv           : OPTIONAL SET [1:?] OF nd_end_spiv_occurrence;
END_ENTITY;

ENTITY nd_medium_flow;
    has_id                 : n_identifier;
    has_flow               : OPTIONAL nd_flow_rate_value;
    has_medium             : OPTIONAL text;
    has_flow_condition     : OPTIONAL text;
UNIQUE
UR1:    has_id;
END_ENTITY;

ENTITY nd_medium_loss;
    has_loss               : OPTIONAL nd_pressure_value;
    has_loss_coefficient   : OPTIONAL real;
    loss_for               : nd_medium_flow;
UNIQUE
UR1:    loss_for;
WHERE
    WR1:    NOT(EXISTS(has_loss) AND EXISTS(has_loss_coefficient));
END_ENTITY;

ENTITY nd_operator_occurrence
    SUBTYPE OF (nd_attaching_part_occurrence);
    has_actuator                : OPTIONAL nd_actuator_type;
END_ENTITY;

ENTITY nd_part_envelope_occurrence_shape_representation;
    is_envelope_of                          : nd_engineering_part_occurrence;
    has_envelope_type                       : nd_part_envelope_type;
    has_shape_type                          : nd_shape_representation_type;
    geometry_is_derived_from_specific       : OPTIONAL nd_specific_part_envelope_shape_representation;
    geometry_is_derived_from_thickness :        : OPTIONAL nd_total_part_insulation_thickness;
    has_part_envelope_id                    : n_identifier;
UNIQUE
UR1: has_part_envelope_id;
END_ENTITY;

ENTITY nd_path_arc;
    path_arc_type               : label;
    path_arc_id                 : n_identifier;
```

```
    gives_cl_geometry_to1       : nd_distribution_interconnection_occurrence;
    gives_cl_geometry_to2       : nd_distribution_part_occurrence;
    has_shape_of                : nd_path_arc_shape_representation;
    ends_at                     : nd_path_node;
    begins_at                   : nd_path_node;
    is_occurrence_of            : OPTIONAL nd_specific_path_arc;
UNIQUE
UR1: path_arc_id;
END_ENTITY;

ENTITY nd_path_node;
    path_node_id                : n_identifier;
    gets_location_from1         : OPTIONAL nd_specific_path_node;
    gets_location_from2         : OPTIONAL nd_path_node_shape_representation;
    occurs_at                   : OPTIONAL nd_path_split;
UNIQUE
UR1: path_node_id;
END_ENTITY;

ENTITY nd_path_split;
    path_split_id               : n_identifier;
    is_located_by               : OPTIONAL nd_path_node;
UNIQUE
UR1: path_split_id;
END_ENTITY;

ENTITY nd_penetration_part
    SUBTYPE OF (nd_attaching_part_occurrence);
END_ENTITY;

ENTITY nd_power;
    has_power                   : nd_power_value;
    has_characteristics         : nd_power_characteristic;
UNIQUE
UR1: has_power, has_characteristics;
END_ENTITY;

ENTITY nd_power_characteristic;
    has_id                  : n_identifier;
    has_power_type          : nd_power_type;
UNIQUE
UR1: has_id;
END_ENTITY;

ENTITY nd_product_spiv_occurrence
    SUBTYPE OF (ncm_occurrence_spiv);
    has_space_spiv          : OPTIONAL SET [1:?] OF nd_space_spiv_occurrence;
    has_end_spiv            : OPTIONAL SET [1:?] OF nd_end_spiv_occurrence;
END_ENTITY;

ENTITY nd_removal_route_envelope_occurrence
    SUBTYPE OF (nd_envelope_occurrence);
END_ENTITY;

ENTITY nd_specific_attaching_part_design
    SUBTYPE OF (nd_specific_attaching_part);
END_ENTITY;
```

```
ENTITY nd_specific_attaching_part_implementation
    SUBTYPE OF (nd_specific_attaching_part);
END_ENTITY;

ENTITY nd_specific_attaching_part
    SUBTYPE OF (nd_specific_discrete_part);
END_ENTITY;

ENTITY nd_specific_control_device
    SUBTYPE OF (nd_specific_device);
END_ENTITY;

ENTITY nd_specific_device
    SUBTYPE OF (nd_specific_engineering_part);
END_ENTITY;

ENTITY nd_specific_discrete_part
    SUBTYPE OF (nd_specific_engineering_part);
END_ENTITY;

ENTITY nd_specific_distribution_part
    SUBTYPE OF (nd_specific_engineering_part);
END_ENTITY;

ENTITY nd_specific_distribution_end
    SUBTYPE OF (nd_specific_end_spiv);
    gets_relative_location_from      : nd_specific_path_node;
    has_shape_of                     : SET [1:?] OF nd_specific_distribution_end_shape_representation;
END_ENTITY;

ENTITY nd_specific_end_spiv
    SUBTYPE OF (ncm_specific_spiv);
END_ENTITY;

ENTITY nd_specific_engineering_part
    SUBTYPE OF (nd_specific_product_spiv);
    has_envelope      : OPTIONAL SET [1:?] OF nd_specific_part_envelope_shape_representation;
    has_path_arc      : OPTIONAL SET [1:?] OF nd_specific_path_arc;
    has_shape_of      : OPTIONAL SET [1:?] OF nd_specific_engineering_part_shape_representation;
END_ENTITY;

ENTITY nd_specific_engineering_part_design
    SUBTYPE OF (nd_specific_engineering_part);
    part_specification  : OPTIONAL text;
    material_spec       : OPTIONAL text;
    material            : OPTIONAL label;
    description         : OPTIONAL text;
END_ENTITY;

ENTITY nd_specific_engineering_part_implementation
    SUBTYPE OF (nd_specific_engineering_part);
    navsea_drawing_number          : OPTIONAL n_identifier;
    weights                        : OPTIONAL SET [1:?] OF nd_weight_condition;
    identified_by                  : OPTIONAL nd_engineering_part_identifier;
    manufacturer_name              : OPTIONAL text;
    manufacturer_part_number       : OPTIONAL n_identifier;
    allowance_parts_list_number    : OPTIONAL n_identifier;
    center_of_gravity              : OPTIONAL nd_engineering_part_center_of_gravity;
```

```
    mil_std_number                  : OPTIONAL text;
    federal_stock_number            : OPTIONAL text;
END_ENTITY;

ENTITY nd_specific_equipment
    SUBTYPE OF (nd_specific_device);
END_ENTITY;

ENTITY nd_specific_equipment_design
    SUBTYPE OF (nd_specific_equipment);
    has_flow_conditions             : ENTITY nd_specific_equipment_implementation
    SUBTYPE OF (nd_specific_equipment);
    shock_qualification_status      : OPTIONAL text;
    source                          : OPTIONAL nd_source;
    safety_consideration_description : OPTIONAL text;
    rated_temperature               : OPTIONAL nd_temperature_value;
    losses                          : OPTIONAL SET [1:?] OF nd_medium_loss;
    pressure_rating                 : OPTIONAL nd_pressure_value;
    output_power                    : OPTIONAL SET [1:?] OF nd_power;
    manufacturers_drawing_number    : OPTIONAL n_identifier;
    interchangeability              : OPTIONAL SET [1:?] OF nd_equipment_interchangeability;
    input_power_at_rated_condition  : OPTIONAL SET [1:?] OF nd_power;
    foundation_finish               : OPTIONAL text;
    alignment_flatness_tolerance        : OPTIONAL nd_length_value;
    alignment_angularity_tolerance  : OPTIONAL nd_angle_value;
END_ENTITY;

ENTITY nd_specific_fastener
    SUBTYPE OF (nd_specific_discrete_part);
END_ENTITY;

ENTITY nd_specific_fastener_set;
    specific_fastener_set_id    : n_identifier;
    occurs_at                   : OPTIONAL nd_fastener_set_occurrence;
    has_component_of            : nd_fastener_set_usage;
UNIQUE
UR1: specific_fastener_set_id;
END_ENTITY;

ENTITY nd_specific_instrument
    SUBTYPE OF (nd_specific_device);
END_ENTITY;

ENTITY nd_specific_instrument_design
    SUBTYPE OF (nd_specific_instrument);
    instrument_type             : OPTIONAL label;
    measured_parameter          : OPTIONAL label;
END_ENTITY;

ENTITY nd_specific_instrument_implementation
    SUBTYPE OF (nd_specific_instrument);
    range_low_value             : OPTIONAL real;
    dial_size                   : OPTIONAL nd_length_value;
    red_hand_alarm_setting      : OPTIONAL real;
    range_high_value            : OPTIONAL real;
END_ENTITY;

ENTITY nd_specific_insulation_part
```

```
    SUBTYPE OF (nd_specific_attaching_part);
    total_part_insulation_thickness        : nd_total_part_insulation_thickness;
END_ENTITY;

ENTITY nd_specific_interface_spiv
    SUBTYPE OF (ncm_specific_spiv);
END_ENTITY;

ENTITY nd_specific_operator
    SUBTYPE OF(nd_specific_attaching_part);
    has_actuator                           : OPTIONAL nd_actuator_type;
END_ENTITY;

ENTITY nd_specific_path_arc;
    specific_path_arc_id              : n_identifier;
    specific_path_arc_type            : nd_path_arc_type;
    ends_at                           : nd_specific_path_node;
    begins_at                         : nd_specific_path_node;
    has_shape_of                      : nd_specific_path_arc_shape_representation;
UNIQUE
UR1: specific_path_arc_id;
END_ENTITY;

ENTITY nd_specific_path_node;
    specific_path_node_id                  : n_identifier;
    gets_location_from                         : nd_specific_path_node_shape_representation;
    gives_location_to                      : SET [1:?] OF nd_path_node;
    gives_rel_location_to                  : OPTIONAL SET [1:?] OF nd_specific_distribution_end;
UNIQUE
UR1: specific_path_node_id;
END_ENTITY;

ENTITY nd_specific_product_spiv
    SUBTYPE OF (ncm_specific_spiv);
END_ENTITY;

ENTITY nd_space_end_occurrence
    SUBTYPE OF (nd_end_spiv_occurrence);
END_ENTITY;

ENTITY nd_space_spiv_occurrence
    SUBTYPE OF (ncm_occurrence_spiv);
    contains_product_spiv             : OPTIONAL SET [1:?] OF nd_product_spiv_occurrence;
    contains_interface_spiv           : OPTIONAL SET [1:?] OF nd_interface_spiv_occurrence;
    has_end_spiv                      : OPTIONAL SET [1:?] OF nd_end_spiv_occurrence;
END_ENTITY;

ENTITY nd_system_operating_condition;
    description                       : OPTIONAL text;
    system_condition_id               : n_identifier;
UNIQUE
UR1: system_condition_id;
END_ENTITY;

ENTITY nd_total_part_insulation_thickness;
    insulation_thickness_value        : nd_length_value;
UNIQUE
UR1: insulation_thickness_value;
```

```
END_ENTITY;

ENTITY nd_weight_condition;
      has_weight_type              : nd_weight_type;
      has_weight_context           : nd_weight_context;
      has_weight                   : nd_weight_value;
      on                           : ncm_date_and_time;
      X_by                         : ncm_person_and_organization;
      has_cog_context              : nd_cog_context;
      has_cog                      : nd_center_of_gravity;
UNIQUE
UR1: has_weight_type, has_weight_context, on, X_by;

ENTITY nd_zone_occurrence
      SUBTYPE OF (nd_space_spiv_occurrence);
END_ENTITY;

            (********************)
            (* HVAC Definitions*)
            (********************)

ENTITY nh_ac_load_test_element
      SUBTYPE OF (nh_hvac_test_element);
END_ENTITY;

ENTITY nh_air_conditioning_plant_unit_occurrence
      SUBTYPE OF (nd_equipment_occurrence);
      has_plant_unit_number            : OPTIONAL integer;
  n_of                                 : OPTIONAL nh_ac_load_test_element;
UNIQUE
UR1: has_plant_unit_number;
END_ENTITY;

ENTITY nh_access_cover_occurrence
  SUBTYPE OF (nh_hvac_component_occurrence);
END_ENTITY;

ENTITY nh_access_opening;
      has_id              : n_identifier;
      has                 : nh_access_cover_occurrence;
      has_shape_of        : nh_access_opening_shape_representation;
UNIQUE
UR1:  has_id;
END_ENTITY;

ENTITY nh_access_opening_shape_dimension;
      has_dimension_name          : text;
      of_opening_shape            : nh_access_opening_shape_representation;
      has_value                   : nd_length_value;
END_ENTITY;

ENTITY nh_access_opening_shape_representation
       SUBTYPE OF(geometric_curve_set);
      with            : nh_opening_shape_type;
END_ENTITY;

ENTITY nh_airborne_noise_hvac_test_element
      SUBTYPE OF (nh_hvac_test_element);
```

```
    has              : SET [1:?] OF nd_compartment_occurrence;
END_ENTITY;

ENTITY nh_compartment_boundary
    SUBTYPE OF (nd_space_end_occurrence);
    has_insulation_type                 : OPTIONAL text;
    has                                 : OPTIONAL nd_compartment_boundary_side;
    has_width                           : OPTIONAL nd_length_value;
    has_height                          : OPTIONAL nd_length_value;
    of_compartment                      : OPTIONAL nd_compartment_occurrence;
END_ENTITY;

ENTITY nh_compartment_condition;
    has_compartment_condition           : nh_compartment_condition_name;
    has_design_rel_humidity             : nd_relative_humidity_value;
    has_design_temperature              : nd_temperature_value;
END_ENTITY;

ENTITY nh_compartment_exterior_boundary
    SUBTYPE OF (nh_compartment_boundary);
    has_type                        : OPTIONAL nh_hvac_load_type;
    has_external_boundary_name      : OPTIONAL text;
UNIQUE
  UR1: has_type;
END_ENTITY;

ENTITY nh_compartment_interface
    SUBTYPE OF (nd_interface_spiv_occurrence);
    has_boundary                : SET [1:?] OF nh_compartment_boundary;
END_ENTITY;

ENTITY nd_compartment_occurrence
    SUBTYPE OF (nd_space_spiv_occurrence);
    has_type                        : OPTIONAL nd_space_type;
    has_compartment_number          : OPTIONAL text;
    has_number_of_personnel         : OPTIONAL integer;
    has_name                        : OPTIONAL text;
    has_light_level                 : OPTIONAL nd_light_intensity_value;
    has_acceptable                  : OPTIONAL nd_noise_value;
    has_assumed_temperature         : OPTIONAL nd_temperature_value;
    has_limiting_temperature        : OPTIONAL nd_temperature_value;
    has_required                    : OPTIONAL nd_medium_flow;
    has_rate_of_change              : OPTIONAL nd_medium_flow;
    has_addnl_repl_required         : OPTIONAL nd_medium_flow;
    has_volume                      : OPTIONAL nd_volume_value;
    has_total_heat                  : OPTIONAL nd_heat_rate_value;
    has_boundary                        : OPTIONAL SET [1:?] OF nh_compartment_boundary;
    has_condition                   : OPTIONAL SET [1:?] OF nh_compartment_condition;
END_ENTITY;

ENTITY nd_condition_signal;
    has_id                      : _identifier;
    produced_by                 : OPTIONAL nd_instrument_occurrence;
    activates                   : OPTIONAL SET [1:?] OF nd_indicator_alarm;
    sent_to                     : OPTIONAL nd_controller;
UNIQUE
UR1:  has_id;
END_ENTITY;
```

```
ENTITY nd_control_parameter;
      has_set_point_value          : OPTIONAL real;
      has_name                     : text;
      has_minimum                  : OPTIONAL real;
      has_maximum                  : OPTIONAL real;
      has_value_units              : OPTIONAL text;
      n_of                         : nd_controlled_object;
UNIQUE
  UR1: has_name,n_of;
END_ENTITY;

ENTITY nd_controlled_object;
      has_id                       : n_identifier;
      is_instance_of1              : OPTIONAL nd_zone_occurrence;
      is_instance_of2              : OPTIONAL nd_compartment_occurrence;
      is_instance_of3              : OPTIONAL nd_engineering_part_occurrence;
      has_control_parameter        : OPTIONAL SET [1:?] OF nd_control_parameter;
UNIQUE
  UR1:  has_id;
END_ENTITY;

ENTITY nd_controller;
      has_id                  : n_identifier;
      _instance_of1           : OPTIONAL nd_control_device_occurrence;
      is_instance_of2         : OPTIONAL nh_responsible_personnel;
      receives                : OPTIONAL SET [1:?] OF nd_condition_signal;
      sets                    : OPTIONAL SET [1:?] OF nd_parameter_control;
UNIQUE
      UR1:          has_id;
END_ENTITY;

ENTITY nh_cps_zone_occurrence
      SUBTYPE OF (nd_zone_occurrence);
      has_protection_level         : OPTIONAL SET [1:?] OF nh_cps_zone_protection_level;
      has_name                     : OPTIONAL text;
END_ENTITY;

ENTITY nd_detected_control_parameter
      SUBTYPE OF (nd_control_parameter);
END_ENTITY;
ENTITY nh_duct_coil_occurrence
      SUBTYPE OF (nh_hvac_coil_occurrence);
END_ENTITY;

ENTITY nh_duct_heater_occurrence
      SUBTYPE OF (nh_hvac_heater_occurrence);
      has_requirement              : OPTIONAL nh_humidistat_required;
      has_heater                   : OPTIONAL nh_duct_heater_use;
END_ENTITY;

ENTITY nh_duct_reinforcing
      SUBTYPE OF (nd_attaching_part_occurrence);
END_ENTITY;

ENTITY nh_duct_seam;
      has                     :OPTIONAL nh_duct_seam_type;
```

```
    has_                        :n_identifier;
END_ENTITY;

ENTITY nh_electrical_duct_heater_occurrence
    SUBTYPE OF (nh_duct_heater_occurrence);
    has_required_output             : OPTIONAL nd_power_value;
END_ENTITY;

ENTITY nd_equipment_operating_condition;
    has_descrption                  : OPTIONAL text;
    has_condition_id                : n_identifier;
    has_design_cooling              : OPTIONAL nd_medium_flow;
    has_ac_load                     : OPTIONAL nd_heat_rate_value;
    has_bypass_flow                 : OPTIONAL nd_flow_rate_value;
    has_replenishment_flow          : OPTIONAL nd_flow_rate_value;
    has_heater_flow                 : OPTIONAL nd_medium_flow;
    has_fan_flow                    : OPTIONAL nd_flow_rate_value;
    has_vibration                   : OPTIONAL nd_frequency_value;
    has_vibration_amplitude         : OPTIONAL nd_length_value;
    has                             : OPTIONAL SET [1:?] OF nd_equipment_system_operating_condition;
UNIQUE
    UR1:  has_condition_id;
END_ENTITY;

ENTITY nh_fan_occurrence
    SUBTYPE OF (nh_hvac_fan_occurrence);
END_ENTITY;

ENTITY nh_fire_zone_occurrence
    SUBTYPE OF (nd_zone_occurrence);
END_ENTITY;

ENTITY nh_gravity_coil_occurrence
    SUBTYPE OF (nh_hvac_coil_occurrence);
END_ENTITY;

ENTITY nh_hvac_fan_coil_assembly_occurrence
    SUBTYPE OF (nh_hvac_fan_occurrence,
            nh_hvac_coil_occurrence);
END_ENTITY;

ENTITY nh_hvac_flow_control_device_occurrence
    SUBTYPE OF (nh_hvac_device_occurrence);
    has_number              : OPTIONAL integer;
    has                     : OPTIONAL SET [1:?] OF nh_hvac_flow_control_operating_condition;
    operated_by             : OPTIONAL nd_operator_occurrence;
UNIQUE
  UR1:    has_number;
END_ENTITY;

ENTITY nh_hvac_joint_sealant_type;
    has_name                : nh_sealant_type_name;
END_ENTITY;

ENTITY nh_hvac_passive_air_filter_occurrence
    SUBTYPE OF (nh_hvac_device_occurrence);
    has_filter_housing_number       : OPTIONAL text;
END_ENTITY;
```

```
ENTITY nh_heating_cooling_load_analysis_case;
	has_id 		: n_identifier;
	has 		: OPTIONAL SET [1:?] OF nh_hvac_system_load_occurrence;
UNIQUE
	UR1:	has_id;
END_ENTITY;

ENTITY nh_bend_break_line_layout_geometry
   SUBTYPE OF(geometric_curve_set);
END_ENTITY;

ENTITY nh_fab_part_cutting_geometry
	SUBTYPE OF(geometric_curve_set);
END_ENTITY;

ENTITY nh_explicit_geometry_part
	SUBTYPE OF (nh_hvac_fabrication_part);
END_ENTITY;

ENTITY nh_hole_punch_layout_geometry
	SUBTYPE OF(geometric_curve_set);
END_ENTITY;

ENTITY nh_standard_shape_macro_parameter;
	has_parameter_value		: text;
	has_parameter_name		: label;
	of_part 		: OPTIONAL nh_hvac_fab_part_standard_shape_macro_part;
END_ENTITY;

ENTITY nh_hvac_fab_part_standard_shape_macro_part
	SUBTYPE OF (nh_hvac_fabrication_part);
	has_id 		: n_identifier;
UNIQUE
	UR1:	has_id;
END_ENTITY;

ENTITY nh_hvac_section_state;
	has_id 		: n_identifier;
	has_available 	: OPTIONAL nd_pressure_value;
	has_loss 	: OPTIONAL nd_pressure_value;
	has_flow 		: OPTIONAL nd_flow_rate_value;
	of_condition 	: OPTIONAL nd_system_operating_condition;
UNIQUE
	UR1:	has_id;
END_ENTITY;

ENTITY nh_hvac_section_state_flow;
	has_flow_to 		: nh_hvac_section_state;
	has_flow_from 		: nh_hvac_section_state;
	n_of 		: h_hvac_port_occurrence;
(* This needs constraint rule(s) *)
END_ENTITY;

ENTITY nh_humidistat_occurrence
	SUBTYPE OF (nd_control_device_occurrence);
END_ENTITY;
```

```
ENTITY nh_hvac_system_load_occurrence;
      has_supply_type              : OPTIONAL text;
      has_system              :    : OPTIONAL nh_damage_control_class;
      has_exhaust_return_type      : OPTIONAL text;
      has_space_treatment_type     : OPTIONAL text;
      has_closure                  : OPTIONAL nh_damage_control_class;
      has_efficiency                     : nh_hvac_load_item;
      of_system                    : nh_hvac_system_occurrence;
UNIQUE
UR1:      of_load,of_system;
END_ENTITY;

ENTITY nh_hvac_active_filter_occurrence
      SUBTYPE OF (nh_hvac_equipment_occurrence);
      has_esp_number               : OPTIONAL text;
      has_esp_required             : OPTIONAL nd_power;
END_ENTITY;

ENTITY nh_hvac_assembly_occurrence
      SUBTYPE OF (nd_assembly_occurrence);
       has_type                          : nh_hvac_assembly_type;
      has_name                           : OPTIONAL text;
      has_shop_drawing_number            : OPTIONAL text;
      has_insulation_instr               : OPTIONAL SET [1:?] OF nd_assembly_insulation_instruction;
      has_coating                        : OPTIONAL SET [1:?] OF nd_assembly_coating_instruction;
      has_assembly_instal_instruct:      : OPTIONAL SET [1:?] OF nd_assembly_installation_instruction;
       has_assembly_instr                : OPTIONAL SET [1:?] OF nd_assembly_assembly_instruction;
      has                                : OPTIONAL SET [1:?] OF nh_hvac_fabrication_part;
END_ENTITY;

ENTITY nh_hvac_coil_occurrence
      SUBTYPE OF (nh_hvac_fan_coil_occurrence);
      supplied_by          : OPTIONAL nh_air_conditioning_plant_unit_occurrence;
END_ENTITY;

ENTITY nh_hvac_component_occurrence
      SUBTYPE OF (nh_hvac_part_occurrence);
END_ENTITY;

ENTITY nh_hvac_device_occurrence
      SUBTYPE OF (nh_hvac_component_occurrence);
END_ENTITY;

ENTITY nh_hvac_duct_occurrence
       SUBTYPE OF (nh_hvac_part_occurrence);
      has_minimum              : OPTIONAL nd_velocity_value;
END_ENTITY;

ENTITY nh_hvac_duct_occurrence_design
      SUBTYPE OF (nh_hvac_duct_occurrence);
END_ENTITY;

ENTITY nh_hvac_duct_occurrence_implementation
      SUBTYPE OF (nh_hvac_duct_occurrence);
      has_duct_length                    : OPTIONAL nd_length_value;
       has_seam                          : OPTIONAL SET [1:?] OF nh_duct_seam;
END_ENTITY;
```

```
ENTITY nh_hvac_equipment_load_occurrence;
      of_hvac_equipment            : nh_hvac_equipment_occurrence;
      of_load                      : nh_hvac_load_item;
UNIQUE
UR1:      f_hvac_equipment,       of_load;
END_ENTITY;

ENTITY nh_hvac_equipment_occurrence
  SUBTYPE OF (nd_equipment_occurrence);
END_ENTITY;

ENTITY nh_hvac_fabrication_part
  SUBTYPE OF (nh_hvac_part_occurrence);
END_ENTITY;

ENTITY nh_hvac_fab_part_end
      SUBTYPE OF (nh_hvac_port_occurrence);
      has_end_prep : OPTIONAL text;
END_ENTITY;

ENTITY nh_hvac_fabrication_piece;
      has_id                                : n_identifier;
      has_cutting_geom                      : OPTIONAL nh_hole_punch_layout_geometry;
      has_bend_layout_geom                  : OPTIONAL nh_bend_break_line_layout_geometry;
      of_explicit_geometry_part             : OPTIONAL nh_explicit_geometry_part;
UNIQUE
UR1:      has_id;
END_ENTITY;

ENTITY nh_hvac_fan_coil_occurrence
      SUBTYPE OF (nh_hvac_equipment_occurrence);
      has_set_control_parameter             : OPTIONAL nd_set_control_parameter;
END_ENTITY;

        SUBTYPE OF (nh_hvac_fan_coil_occurrence);
      has_equipment_hvac_numbe              : OPTIONAL integer;
END_ENTITY;

ENTITY nh_hvac_flow_control_operating_condition;
      has_condition                       : OPTIONAL nh_hvac_flow_control_device_condition;
       of_condition                       : nd_system_operating_condition;
END_ENTITY;

ENTITY nh_hvac_fitting_occurrence
      SUBTYPE OF       (nh_hvac_component_occurrence);
END_ENTITY;

ENTITY nh_hvac_heater_occurrence
      SUBTYPE OF       (nh_hvac_equipment_occurrence);
       has_set_control_parameter            : OPTIONAL nd_set_control_parameter;
      has_required_capacity                 : OPTIONAL nd_heat_rate_value;
END_ENTITY;

ENTITY nh_hvac_interconnection_interface_occurrence
      SUBTYPE OF (nh_hvac_interface_occurrence);
END_ENTITY;
```

```
ENTITY nh_hvac_interconnection_occurrence
    SUBTYPE OF (nd_distribution_interconnection_occurrence);
END_ENTITY;

ENTITY nh_hvac_interface_occurrence
    SUBTYPE OF      (nd_distribution_interface_occurrence);
    joins                   : SET [1:?] OF nh_hvac_port_occurrence;
END_ENTITY;

ENTITY nh_hvac_joint_joining_type;
    has_name                    : nh_joining_type_name;
    determines_joint_tightness  : OPTIONAL SET [1:?] OF nh_hvac_joint_tightness;
UNIQUE
    UR1:    has_name;
END_ENTITY;

ENTITY nh_hvac_joint_occurrence
    SUBTYPE OF      (nh_hvac_interface_occurrence);
END_ENTITY;

ENTITY nh_hvac_joint_occurrence_design
    SUBTYPE OF (nh_hvac_joint_occurrence);
    has_test_requirement_id         : OPTIONAL n_identifier;
    has_joining_spec_id             : OPTIONAL n_identifier;
    _inspection_reqm_id             : OPTIONAL n_identifier;
    has_type                        : nh_hvac_joint_type;
END_ENTITY;

ENTITY nh_hvac_joint_occurrence_implementation
    SUBTYPE OF (nh_hvac_joint_occurrence);
    has_fab_reqmt_id            : OPTIONAL n_identifier;
    has_joining_type            : OPTIONAL nh_hvac_joint_joining_type;
    has                         : OPTIONAL nh_hvac_joint_tightness;
    has_joint_sealant_type      : OPTIONAL nh_hvac_joint_sealant_type;
    has_engagement_dist         : OPTIONAL nd_length_value;
END_ENTITY;

ENTITY nh_hvac_joint_tightness;
    has_name                    : nh_joint_tightness_name;
    is_determined_by1           : nh_hvac_joint_sealant_type;
    is_determined_by2           : nh_hvac_joint_joining_type;
UNIQUE
UR1: is_determined_by1,is_determined_by2;
    has_name;
END_ENTITY;

ENTITY nh_hvac_load_item;
    has_id                  : n_identifier;
    has                     : OPTIONAL SET [1:?] OF nh_hvac_port_load_occurrence;
    is_instance_of1         : OPTIONAL nd_compartment_occurrence;
    is_instance_of2         : OPTIONAL nd_equipment_occurrence;
UNIQUE
 UR1    : has_id;
END_ENTITY;

ENTITY nh_hvac_part_occurrence
    SUBTYPE OF (nd_distribution_part_occurrence);
```

```
    has_access_opening          : OPTIONAL SET [1:?] OF nh_access_opening;
END_ENTITY;

ENTITY nh_hvac_part_occurrence_design
    SUBTYPE OF (nh_hvac_part_occurrence);
    has_req_therm_insul_spec    : OPTIONAL n_identifier;
    has_req_noise_atten_spec    : OPTIONAL n_identifier;
    has_loss                    : OPTIONAL nd_pressure_value;
    has_loss_per_foot           : OPTIONAL nd_pressure_value;
    has_velocity_pres           : OPTIONAL nd_pressure_value;
    has_velocity                : OPTIONAL nd_velocity_value;
END_ENTITY;

ENTITY nh_hvac_part_occurrence_implementation
    SUBTYPE OF (nh_hvac_part_occurrence);
    of_opening                  : OPTIONAL nh_access_opening;
END_ENTITY;

ENTITY nh_hvac_port_load_occurrence;
    has_port_location_description     : OPTIONAL text;
    has_required_flow                 : OPTIONAL nd_flow_rate_value;
    of_port                           : nh_hvac_port_occurrence;
END_ENTITY;

ENTITY nh_hvac_port_occurrence
    SUBTYPE OF (nd_distribution_end_occurrence);
    is_branch_of                : OPTIONAL nh_hvac_duct_occurrence;
    n_of                        : OPTIONAL nd_engineering_part_occurrence;
    of_interconnection          : OPTIONAL nh_hvac_interconnection_occurrence;
    of_system                   : OPTIONAL nh_hvac_system_occurrence;
END_ENTITY;

ENTITY nh_hvac_port_occurrence_design
    SUBTYPE OF (nh_hvac_port_occurrence);
    has_equivalent_diameter           : OPTIONAL nd_length_value;
    has_state                         : OPTIONAL SET [1:?] OF nh_hvac_port_state;
    has_type                          : nh_hvac_port_type;
END_ENTITY;

ENTITY nh_hvac_port_occurrence_implementation
    SUBTYPE OF (nh_hvac_port_occurrence);
    has                       : nh_hvac_port_xsect;
END_ENTITY;

ENTITY nh_hvac_port_state;
    has_id                      : n_identifier;
    has_flow_direction          : nh_hvac_port_state_flow_direction;
    has_temperature             : nd_temperature_value;
    has_available_system        : nd_pressure_value;
    has_flow                    : nd_flow_rate_value;
    of_condition                : nd_system_operating_condition;
UNIQUE
UR1:    has_id
END_ENTITY;

ENTITY nh_hvac_port_xsect;
    has_id                    : n_identifier;
    has_type_name             : nh_xsect_type_name;
```

```
UNIQUE
UR1:    has_id;
END_ENTITY;

ENTITY nh_hvac_section_occurrence
    SUBTYPE OF (nh_hvac_interconnection_occurrence);
END_ENTITY;

ENTITY nh_hvac_section_occurrence_design
    SUBTYPE OF (nh_hvac_section_occurrence);
    has_state               : OPTIONAL SET [1:?] OF nh_hvac_section_state;
END_ENTITY;

ENTITY nh_hvac_section_occurrence_implementation
    SUBTYPE OF (nh_hvac_section_occurrence);
END_ENTITY;

ENTITY nh_hvac_support
    SUBTYPE OF      (nd_attaching_part_occurrence);
END_ENTITY;

ENTITY nh_hvac_system_interface_occurrence
    SUBTYPE OF (nh_hvac_interface_occurrence);
END_ENTITY;

ENTITY nh_hvac_system_occurrence
    SUBTYPE OF (nd_distribution_system_occurrence);
    has                     : OPTIONAL SET [1:?] OF nh_hvac_equipment_occurrence;
    serves                  : OPTIONAL SET [1:?] OF nh_hvac_system_load_occurrence;
    has_coil                : OPTIONAL SET [1:?] OF nh_hvac_coil_occurrence;
    has_fan                 : OPTIONAL SET [1:?] OF nh_fan_occurrence;
    has_heater              : OPTIONAL SET [1:?] OF nh_hvac_heater_occurrence;
END_ENTITY;

ENTITY nh_hvac_system_occurrence_design
    SUBTYPE OF      (nh_hvac_system_occurrence);
    has_org_diagram_number          : OPTIONAL text;
    has_number                      : integer;
    has_diagram_no_organization_id:     : OPTIONAL n_identifier;
    has_abbreviation                : ext;
    has                             : OPTIONAL SET [1:?] OF nd_system_operating_condition;
UNIQUE
UR1:    has_number,         has_abbreviation;
END_ENTITY;

ENTITY nh_hvac_system_occurrence_implementation
     SUBTYPE OF     (nh_hvac_system_occurrence);
END_ENTITY;

ENTITY nh_hvac_test;
    has_type                        : OPTIONAL nh_test_type;
    has_memo_title                  : text;
    has_memo_revision               : text;
    has_memo_number                     : text;
    has                             : OPTIONAL SET [1:?] OF nh_hvac_test_element;
END_ENTITY;
```

```
ENTITY nh_hvac_test_element;
    has_id                      : n_identifier;
    requires_use_of             : OPTIONAL nd_specific_instrument;
UNIQUE
    UR1:        has_id;
END_ENTITY;

ENTITY nh_hvac_turn_elbow_occurrence
    SUBTYPE OF      (nh_hvac_fitting_occurrence);
    has_turn                    : OPTIONAL nd_angle_value;
END_ENTITY;

ENTITY nd_interlock;
    trigger_of                  : nd_parameter_control;
    sets                        : nd_parameter_control;
UNIQUE
    UR1:        trigger_of, sets;
END_ENTITY;

ENTITY nh_motor_controller_occurrence
    SUBTYPE OF      (nd_control_device_occurrence);
END_ENTITY;

ENTITY nh_non_standard_xsect
    SUBTYPE OF      nh_hvac_port_xsect);
END_ENTITY;

ENTITY nd_parameter_control;
    set_by                      : nd_controller;
    sets                        : nd_set_control_parameter;
    triggers                    : OPTIONAL nd_interlock;
    triggered_by                : OPTIONAL nd_interlock;
UNIQUE
    UR1:    set_by, sets;
WHERE
    WR1: NOT    (EXISTS (triggers)      AND EXISTS (triggered_by));
END_ENTITY;

ENTITY nd_parameter_measurement_instrument;
    of_detected                 : nd_detected_control_parameter;
    of_instrument               : nd_instrument_occurrence;
UNIQUE
    UR1:    of_detected, of_instrument;
END_ENTITY;

ENTITY nh_pressure_zone_integrity_test_element
    SUBTYPE OF      (nh_hvac_test_element);
    has                         : SET [1:?] OF nh_cps_zone_occurrence;
END_ENTITY;

ENTITY nh_responsible_personnel;
    has_personnel_category_name         :text;
UNIQUE
UR1:        has_personnel_category_name;
END_ENTITY;
```

```
ENTITY nh_specific_access_cover
    SUBTYPE OF      (nh_specific_hvac_component);
END_ENTITY;

ENTITY nh_specific_duct_coil
    SUBTYPE OF      (nh_specific_hvac_coil);
END_ENTITY;

ENTITY nh_specific_duct_heater
    SUBTYPE OF      (nh_specific_hvac_heater);
END_ENTITY;

ENTITY nh_specific_electrical_duct_heater
    SUBTYPE OF      (nh_specific_duct_heater);
END_ENTITY;

ENTITY nh_specific_electrical_space_heater
    SUBTYPE OF      (nh_specific_hvac_heater);
END_ENTITY;

ENTITY nh_specific_fan
    SUBTYPE OF       (nh_specific_hvac_fan);
END_ENTITY;

ENTITY nh_specific_hvac_fan
    SUBTYPE OF      (nh_specific_hvac_equipment);
END_ENTITY;
ENTITY nh_specific_gravity_coil
    SUBTYPE OF      (nh_specific_hvac_coil);
END_ENTITY;

ENTITY nh_specific_flow_control_device
    SUBTYPE OF      (nd_specific_device);
    has_type                    : OPTIONAL nh_flow_control_device_type;
END_ENTITY;

ENTITY nh_specific_hvac_passive_air_filter_design
    SUBTYPE OF      (nh_specific_hvac_passive_filter);
    has_filter_gauge_type   : OPTIONAL text;
    has_filter_gauge        : OPTIONAL nd_pressure_value;
    has_loss_dirty          : OPTIONAL nd_pressure_value;
    has_loss_clean          : OPTIONAL nd_pressure_value;
END_ENTITY;

ENTITY nh_specific_hvac_passive_air_filter_implementation
    SUBTYPE OF      (nh_specific_hvac_passive_filter);
    has_size                    : OPTIONAL integer;
    has_type                    : OPTIONAL text;
END_ENTITY;

ENTITY nh_specific_hvac_passive_filter
    SUBTYPE OF      (nd_specific_device);
END_ENTITY;

ENTITY nh_specific_hvac_turn_elbow
    SUBTYPE OF      (nh_specific_hvac_fitting);
    has_type                        : OPTIONAL nh_turn_elbow_type;
    has_radius_ratio                : OPTIONAL real;
```

```
    has_num_of_splitters            : OPTIONAL integer;
    has_aspect_ratio                : OPTIONAL real;
    has_splitter_radius             : OPTIONAL nd_length_value;
    has_radius                      : OPTIONAL nd_length_value;
END_ENTITY;

ENTITY nh_specific_active_filter
    SUBTYPE OF      (nh_specific_hvac_equipment);
    has_type                        : OPTIONAL text;
    has_size                        : OPTIONAL integer;
    has_loss_dirty                  : OPTIONAL nd_pressure_value;
    has_loss_clean                  : OPTIONAL nd_pressure_value;
END_ENTITY;

ENTITY nh_specific_hvac_coil
    SUBTYPE OF      (nh_specific_hvac_fan_coil);
END_ENTITY;

ENTITY nh_specific_hvac_component
    SUBTYPE OF      (nh_specific_hvac_part);
END_ENTITY;

ENTITY nh_specific_hvac_component_design
    SUBTYPE OF                      : (nh_specific_hvac_component);
has_pressure_loss_coeff                 : OPTIONAL real;
has_fixed_loss                  : OPTIONAL nd_pressure_value;
END_ENTITY;

ENTITY nh_specific_hvac_component_implementation
    SUBTYPE OF      (nh_specific_hvac_component);
END_ENTITY;P

ENTITY nh_specif
ic_hvac_device
    SUBTYPE OF      (nh_specific_hvac_component);
END_ENTITY;


ENTITY nh_specific_hvac_duct
    SUBTYPE OF      (nh_specific_hvac_part);
END_ENTITY;

ENTITY nh_specific_duct_design
    SUBTYPE OF      (nh_specific_hvac_duct);
    has_maximum                     : OPTIONAL nd_velocity_value;
     has_loss_per_foot          : OPTIONAL nd_pressure_value;
END_ENTITY;

ENTITY nh_specific_hvac_duct_implementation
    SUBTYPE OF      (nh_specific_hvac_duct);
END_ENTITY;

ENTITY nh_specific_hvac_equipment
    SUBTYPE OF      (nd_specific_equipment);
END_ENTITY;

ENTITY nh_specific_hvac_fan_coil
    SUBTYPE OF      (nh_specific_hvac_equipment);
```

```
    has_hvac_type                    : OPTIONAL nh_hvac_fan_coil_type;
    has_size                         : OPTIONAL text;
END_ENTITY;

ENTITY nh_specific_hvac_fan_coil_assembly
    SUBTYPE OF    (nh_specific_hvac_fan, nh_specific_hvac_coil);
END_ENTITY;

ENTITY nh_specific_hvac_fitting
    SUBTYPE OF    (nh_specific_hvac_component);
    has_type : text;
END_ENTITY;

ENTITY nh_specific_hvac_heater
    SUBTYPE OF    (nh_specific_hvac_equipment);
    has_hvac_type                    : OPTIONAL nh_hvac_fan_coil_type;
    has_size                         : OPTIONAL text;
    has_maximum_capacity : OPTIONAL nd_heat_rate_value;
END_ENTITY;

ENTITY nh_specific_hvac_part
    SUBTYPE OF    (nd_specific_distribution_part);
END_ENTITY;

ENTITY nh_specific_hvac_part_design
SUBTYPE OF (nh_specific_hvac_part);
    has_type : text;
END_ENTITY;

ENTITY nh_specific_hvac_part_implementation
    SUBTYPE OF    (nh_specific_hvac_part);
    has_thickness_value              : OPTIONAL real;
    has_thickness_format             : OPTIONAL nh_thickness_gauge_format;
END_ENTITY;
ENTITY nh_specific_hvac_port
    SUBTYPE OF    (nd_specific_distribution_end);
END_ENTITY;

ENTITY nh_specific_hvac_port_design
    SUBTYPE OF (nh_specific_hvac_port);
    has_port_type     : nh_hvac_port_type;
END_ENTITY;

ENTITY nh_specific_hvac_port_implementation
    SUBTYPE OF    (nh_specific_hvac_port);
    has                  nh_specific_hvac_port_xsect;
END_ENTITY;

ENTITY nh_specific_hvac_port_xsect;
    has_name     : text;
    has_corner_radius          : nd_length_value;
    has_width    :             : nd_length_value;
    has_height   :             : nd_length_value;
END_ENTITY;

ENTITY nh_specific_hvac_fastener
    SUBTYPE OF    (nd_specific_fastener);
```

```
      has_type          nh_hvac_fastener_type;
END_ENTITY;

ENTITY nh_steam_duct_heater
      SUBTYPE OF       (nh_specific_duct_heater);
END_ENTITY;

ENTITY nh_specific_unit_cooler
  SUBTYPE OF (nh_specific_hvac_fan,
             nh_specific_hvac_coil);
END_ENTITY;

ENTITY nh_specific_unit_heater
      SUBTYPE OF       (nh_specific_hvac_heater);
      has                      :nh_specific_fan;
END_ENTITY;

ENTITY nd_set_control_parameter
      SUBTYPE OF       (nd_control_parameter);
END_ENTITY;

ENTITY nh_small_offset_duct
      SUBTYPE OF        (nh_hvac_duct_occurrence);
END_ENTITY;

ENTITY nh_standard_xsect
      SUBTYPE OF       (nh_hvac_port_xsect);
      has_corner_radius                  : nd_length_value;
      has_width                          : nd_length_value;
       has_height                        : nd_length_value;
END_ENTITY;

ENTITY nh_steam_duct_heater_occurrence
      SUBTYPE OF                         : (nh_duct_heater_occurrence);
      has_design_heating                 : OPTIONAL nd_flow_rate_value;
END_ENTITY;

ENTITY nh_straight_duct
      SUBTYPE OF       (nh_hvac_duct_occurrence);
END_ENTITY;

ENTITY nh_system_operating_component_hvac_test_element
      SUBTYPE OF       (nh_hvac_test_element);
      has                        : SET [1:?] OF nd_engineering_part_occurrence;
END_ENTITY;

ENTITY nh_system_performance_balance_hvac_test_element
      SUBTYPE OF       (nh_hvac_test_element);
      has                        : SET [1:?] OF nh_hvac_system_occurrence;
END_ENTITY;

ENTITY nh_thermostat_occurrence
      SUBTYPE OF       (nd_control_device_occurrence);
END_ENTITY;

ENTITY nh_unit_cooler_occurrence
      SUBTYPE OF       (nh_hvac_fan_occurrence,
```

```
                nh_hvac_coil_occurrence);
END_ENTITY;

ENTITY nh_unit_heater_occurrence
    SUBTYPE OF      (nh_hvac_heater_occurrence);
    has_design_heating      :           : OPTIONAL nd_flow_rate_value;
END_ENTITY;

ENTITY nh_watertight_closure_test_element
    SUBTYPE OF      (nh_hvac_test_element);
    has                             : SET [1:?] OF nh_hvac_part_occurrence;
END_ENTITY;

(*************************************************************************)
(* Shape Model For NIDDESC Distribution Systems including Defined Types *)
(*************************************************************************)

TYPE nd_shape_representation_type   =    ENUMERATION OF (
    csg_solid, csg_primitive, brep_solid, geometric_curve_set);
END_TYPE;

TYPE nd_shape_representation_style  =    ENUMERATION OF (
    diagram, detail);
END_TYPE;

TYPE nd_part_envelope_type      =    ENUMERATION OF (
    insulation,
    maintenance_access,
    interference,shock_excursion);
END_TYPE;

TYPE nd_specific_part_envelope_type      = ENUMERATION OF (
    insulation,
    maintenance_access,
    interference);
END_TYPE;

ENTITY nd_specific_engineering_part_shape_representation
    SUBTYPE OF (representation)
    SUPERTYPE OF (ONEOF
(nd_specific_part_diagram_shape_representation,

nd_specific_part_detail_shape_representation));
    is_shape_of             : nd_specific_engineering_part;
    has_type                : nd_shape_representation_type;
    has_style               : nd_shape_representation_style;
    is_rep_by               : n_identifier;
UNIQUE
UR1: is_rep_by;
END_ENTITY;

ENTITY nd_specific_part_diagram_shape_representation
    SUBTYPE OF      (nd_specific_engineering_part_shape_representation);
    founded_by                      : nd_specific_part_diagram_shape_representation_context;
    has_founded_item                : nd_specific_part_diagram_shape_item;
END_ENTITY;
```

```
ENTITY nd_specific_part_diagram_shape_representation_context
    SUBTYPE OF      (representation_context);
END_ENTITY;

TYPE nd_specific_part_diagram_shape_item = SELECT (geometric_curve_set);
END_TYPE;

ENTITY nd_specific_part_detail_shape_representation
    SUBTYPE OF      (nd_specific_engineering_part_shape_representation);
    founded_by                  : nd_specific_part_detail_shape_representation_context;
    has_founded_item            : nd_specific_part_detail_shape_item;
END_ENTITY;

ENTITY nd_specific_part_detail_shape_representation_context
    SUBTYPE OF      (representation_context);
END_ENTITY;

(* the following is not modelled exactly as shown in related NIAM Eng_prt_oc_dtl_shp_rep_replica is shown as one of the
eng_prt_oc_dtl_shp_item selections rather than separately.      *)
TYPE nd_specific_part_detail_shape_item = SELECT (
    csg_solid,
    csg_primitive,
    manifold_solid_brep);
END_TYPE;

ENTITY nd_specific_arc_part_diagram_representation_relationship
    SUBTYPE OF      representation_relationship);
    base_rep                    : nd_specific_part_diagram_shape_representation;
    associated_rep              : nd_specific_path_arc_diagram_shape_representation;
    relocation_rel              : nd_specific_arc_part_diagram_representation_context_association;
END_ENTITY;

ENTITY nd_specific_arc_part_diagram_representation_context_association
    SUBTYPE OF      (representation_context_association);
    has_context                     : nd_specific_part_diagram_shape_representation_context;
    assoc_context_of                : nd_specific_path_arc_diagram_shape_representation_context;
    transform_operator              : transformation

END_ENTITY;

ENTITY nd_specific_arc_part_detail_representation_relationship
    SUBTYPE OF      (representation_relationship);
    base_rep                    : nd_specific_part_detail_shape_representation;
    associated_rep              : nd_specific_path_arc_detail_shape_representation;
    relocation_rel              : nd_specific_arc_part_detail_representation_context_association;
END_ENTITY;

ENTITY nd_specific_arc_part_detail_representation_context_association
    SUBTYPE OF      (representation_context_association);
    has_context                     : nd_specific_part_detail_shape_representation_context;
    assoc_context_of                : nd_specific_path_arc_detail_shape_representation_context;
    transform_operator              : transformation;
END_ENTITY;

ENTITY nd_specific_path_arc_shape_representation
    SUBTYPE OF      (representation)
    SUPERTYPE OF    (ONEOF (nd_specific_path_arc_diagram_shape_representation,
            nd_specific_path_arc_detail_shape_representation));
```

```
    is_shape_of                     : nd_specific_path_arc;
    has_style                       : nd_shape_representation_style;
    is_rep_by                       : n_identifier;
UNIQUE
UR1:    is_rep_by;
END_ENTITY;

ENTITY nd_specific_path_arc_diagram_shape_representation
    SUBTYPE OF      (nd_specific_path_arc_shape_representation);
    founded_by                      : nd_specific_path_arc_diagram_shape_representation_context;
    has_founded_item                : nd_specific_path_arc_shape_item;
END_ENTITY;

ENTITY nd_specific_path_arc_diagram_shape_representation_context
    SUBTYPE OF      (representation_context);
END_ENTITY;

TYPE nd_specific_path_arc_shape_item = SELECT (
    trimmed_curve,
    line);
END_TYPE;

ENTITY nd_specific_path_arc_detail_shape_representation
    SUBTYPE OF      (nd_specific_path_arc_shape_representation);
    founded_by                      : nd_specific_path_arc_detail_shape_representation_context;
    has_founded_item                : nd_specific_path_arc_shape_item;
END_ENTITY;

ENTITY nd_specific_path_arc_detail_shape_representation_context
    SUBTYPE OF      (representation_context);
END_ENTITY;

ENTITY nd_specific_path_node_shape_representation
    SUBTYPE OF      (representation)
    SUPERTYPE OF    (ONEOF (nd_specific_path_node_diagram_shape_representation,
            :nd_specific_path_node_detail_shape_representation));
    is_shape_of             : nd_specific_path_node;
    has_style               : nd_shape_representation_style;
    is_rep_by               : n_identifier;
UNIQUE
UR1: is_rep_by;
END_ENTITY;

ENTITY nd_specific_path_node_diagram_shape_representation
    SUBTYPE OF      (nd_specific_path_node_shape_representation);
    founded_by                  : nd_specific_path_arc_diagram_shape_representation_context;
    has_founded_item            : nd_specific_path_node_diagram_shape_item;
END_ENTITY;

TYPE nd_specific_path_node_diagram_shape_item = SELECT (
    axis1_placement);
END_TYPE;

ENTITY nd_specific_path_node_detail_shape_representation
    SUBTYPE OF      (nd_specific_path_node_shape_representation);
    founded_by              : nd_specific_path_arc_detail_shape_representation_context;
    has_founded_item        : nd_specific_path_node_detail_shape_item;
END_ENTITY;
```

```
TYPE nd_specific_path_node_detail_shape_item = SELECT (axis2_placement);
END_TYPE;

ENTITY nd_specific_end_node_diagram_representation_relationship
    SUBTYPE OF      (representation_relationship);
    base_rep            : nd_specific_path_node_diagram_shape_representation;
    associated_re       : nd_specific_distribution_end_diagram_shape_representation;
    relocation_rel      : nd_specific_end_node_diagram_representation_context_association;
END_ENTITY;

ENTITY nd_specific_end_node_diagram_representation_context_association
    SUBTYPE OF      (representation_context_association);
    has_context                 : nd_specific_path_arc_diagram_shape_representation_context;
    assoc_context_              : nd_specific_distribution_end_diagram_shape_representation_context;
    transform_operator          : transformation;
END_ENTITY;

ENTITY nd_specific_end_node_detail_representation_relationship
    SUBTYPE OF      (representation_relationship);
    base_rep                : nd_specific_path_node_detail_shape_representation;
    associated_rep          : nd_specific_distribution_end_detail_shape_representation;
    relocation_rel          : nd_specific_end_node_detail_representation_context_association;
END_ENTITY;

ENTITY nd_specific_end_node_detail_representation_context_association
    SUBTYPE OF      representation_context_association);
    has_context                 : nd_specific_path_arc_detail_shape_representation_context;
    assoc_context_of            : nd_specific_distribution_end_detail_shape_representation_context;
    transform_operator          : transformation;
END_ENTITY;

ENTITY nd_specific_distribution_end_shape_representation
    SUBTYPE OF      (representation)
    SUPERTYPE OF    (ONEOF
    (nd_specific_distribution_end_diagram_shape_representation,
    nd_specific_distribution_end_detail_shape_representation));
    is_shape_of         : nd_specific_distribution_end;
    has_style           : nd_shape_representation_style;
    is_rep_by           : n_identifier;
UNIQUE
UR1: is_rep_by;
END_ENTITY;

ENTITY nd_specific_distribution_end_diagram_shape_representation
    SUBTYPE OF      (nd_specific_distribution_end_shape_representation);
    founded_by              : nd_specific_distribution_end_diagram_shape_representation_context;
    has_founded_item        : nd_specific_distribution_end_diagram_shape_item;
END_ENTITY;

ENTITY nd_specific_distribution_end_diagram_shape_representation_context
    SUBTYPE OF      representation_context);
END_ENTITY;

ENTITY nd_specific_distribution_end_diagram_shape_item;
END_ENTITY;
```

```
ENTITY nd_specific_distribution_end_detail_shape_representation
    SUBTYPE OF      (nd_specific_distribution_end_shape_representation);
    founded_by              : nd_specific_distribution_end_detail_shape_representation_context;
    has_founded_item        : nd_specific_distribution_end_detail_shape_item;
END_ENTITY;

ENTITY nd_specific_distribution_end_detail_shape_representation_context
    SUBTYPE OF      (representation_context);
END_ENTITY;

TYPE nd_specific_distribution_end_detail_shape_item = SELECT (geometric_curve_set);
END_TYPE;

ENTITY nd_engineering_part_occurrence_shape_representation
    SUBTYPE OF      (representation)
    SUPERTYPE OF    (ONEOF
    (nd_engineering_part_occurrence_diagram_shape_representation,
    nd_engineering_part_occurrence_detail_shape_representation));
    is_shape_of         : nd_engineering_part_occurrence;
    has_type            : nd_shape_representation_type;
    has_style           : nd_shape_representation_style;
    is_rep_by           : n_identifier;
UNIQUE
    UR1: is_rep_by;
END_ENTITY;

ENTITY nd_engineering_part_occurrence_diagram_shape_representation
    SUBTYPE OF      (nd_engineering_part_occurrence_shape_representation);
    founded_by              : nd_engineering_part_occurrence_diagram_shape_representation_context;
    has_founded_item        : nd_engineering_part_occurrence_diagram_shape_item;
END_ENTITY;

ENTITY nd_engineering_part_occurrence_diagram_shape_representation_context
    SUBTYPE OF      (representation_context);
END_ENTITY;

(* The following is not modelled exactly as shown in related NIAM.
Eng_prt_oc_diag_shp_rep_replica is   shown as one of the
eng_prt_oc_diag_shp_item selections rather than separately. *)
TYPE nd_engineering_part_occurrence_diagram_shape_item = SELECT (geometric_curve_set,
    nd_engineering_part_occurrence_diagram_shape_representation_replica);
(* Note: May also be null when only centerline is being passed. *)
END_TYPE;

ENTITY nd_engineering_part_occurrence_diagram_shape_representation_replica
    SUBTYPE OF      (representation_replica);
    replicated_rep          : nd_specific_part_diagram_shape_representation;
    located_by              : transformation;
END_ENTITY;

ENTITY nd_engineering_part_occurrence_detail_shape_representation
    SUBTYPE OF      (nd_engineering_part_occurrence_shape_representation);
    founded_by              : nd_engineering_part_occurrence_detail_shape_representation_context;
    has_founded_item        : nd_engineering_part_occurrence_detail_shape_item;
END_ENTITY;
```

```
ENTITY nd_engineering_part_occurrence_detail_shape_representation_context
    SUBTYPE OF    (representation_context);
END_ENTITY;

(* The following is not modelled exactly as shown in related NIAM.
Eng_prt_oc_dtl_shp_rep_replica is shown as one of the eng_prt_oc_dtl_shp_item
selections rather than separately. *)
    TYPE nd_engineering_part_occurrence_detail_shape_item = SELECT (
    csg_solid,
    csg_primitive,
    manifold_solid_brep,
    nd_engineering_part_occurrence_detail_shape_representation_replica);
(* Note: May also be null when only centerline is being passed. *)
END_TYPE;

ENTITY nd_engineering_part_occurrence_detail_shape_representation_replica
    SUBTYPE OF    (representation_replica);
    replicated_rep              : nd_specific_part_detail_shape_representation;
    located_by                  : transformation;
END_ENTITY;

ENTITY nd_engineering_part_center_of_gravity
    SUBTYPE OF    representation);
    has_founded_item            : cartesian_point;
    represent_context           : nd_specific_engineering_part_detail_shape_representation_context;
    cog_of                      : nd_specific_engineering_part_implementation;
END_ENTITY;

ENTITY nd_specific_engineering_part_detail_shape_representation_context
    SUBTYPE OF    (representation_context);
END_ENTITY;

ENTITY nd_arc_part_occurrence_diagram_representation_relationship
    SUBTYPE OF    (representation_relationship);
    base_rep            : nd_engineering_part_occurrence_diagram_shape_representation;
    associated_rep      : nd_path_arc_diagram_shape_representation;
    relocation_rel      : nd_arc_part_occurrence_diagram_representation_context_association;
END_ENTITY;

ENTITY nd_arc_part_occurrence_diagram_representation_context_association
    SUBTYPE OF    (representation_context_association);
    has_context                 : nd_engineering_part_occurrence_diagram_shape_representation_context;
    assoc_context_of            : nd_path_arc_diagram_shape_representation_context;
    transform_operator          :t ransformation;
END_ENTITY;

ENTITY nd_arc_part_occurrence_detail_representation_relationship
    SUBTYPE OF    (representation_relationship);
    base_rep            : nd_engineering_part_occurrence_detail_shape_representation;
    associated_rep      : nd_path_arc_detail_shape_representation;
    relocation_rel      : nd_arc_part_occurrence_detail_representation_context_association;
END_ENTITY;

ENTITY nd_arc_part_occurrence_detail_representation_context_association
    SUBTYPE OF    (representation_context_association);
    has_context                 : nd_engineering_part_occurrence_detail_shape_representation_context;
    assoc_context_of            : nd_path_arc_detail_shape_representation_context;
```

```
    transform_operator          : transformation;
END_ENTITY;

ENTITY nd_path_arc_shape_representation
    SUBTYPE OF      (representation)
    SUPERTYPE OF    (ONEOF (nd_path_arc_diagram_shape_representation,
                nd_path_arc_detail_shape_representation));
    is_shape_of             : nd_path_arc;
    has_style               : nd_shape_representation_style;
    is_rep_by               : n_identifier;
UNIQUE
UR1:    is_rep_by;
END_ENTITY;

ENTITY nd_path_arc_diagram_shape_representation
    SUBTYPE OF      (nd_path_arc_shape_representation);
    founded_by              : nd_path_arc_diagram_shape_representation_context;
    has_founded_item        : nd_path_arc_diagram_shape_item;
END_ENTITY;

ENTITY nd_path_arc_diagram_shape_representation_context
    SUBTYPE OF      (representation_context);
END_ENTITY;

TYPE nd_path_arc_diagram_shape_item = SELECT (axis1_placement,
    nd_path_arc_diagram_shape_representation_replica);
END_TYPE;

ENTITY nd_path_arc_diagram_shape_representation_replica;
    replicated_rep          : nd_specific_path_arc_diagram_shape_representation;
    located_by              : transformation;
END_ENTITY;

ENTITY nd_path_arc_detail_shape_representation
    SUBTYPE OF      (nd_path_arc_shape_representation);
    founded_by                  : nd_path_arc_detail_shape_representation_context;
    has_founded_item            : nd_path_arc_detail_shape_item;
END_ENTITY;

ENTITY nd_path_arc_detail_shape_representation_context
    SUBTYPE OF      (representation_context);
END_ENTITY;
TYPE nd_path_arc_detail_shape_item = SELECT (axis2_placement,
    nd_path_arc_detail_shape_representation_replica);
END_TYPE;

ENTITY nd_path_arc_detail_shape_representation_replica;
    replicated_rep          : nd_specific_path_arc_detail_shape_representation;
     located_by             : transformation;
END_ENTITY;

ENTITY nd_path_node_shape_representation
    SUBTYPE OF      (representation)
    SUPERTYPE OF (ONEOF (nd_path_node_diagram_shape_representation,
                nd_path_node_detail_shape_representation));
    is_shape_of             : nd_path_node;
    has_style               : nd_shape_representation_style;
    is_rep_by               : n_identifier;
```

```
UNIQUE
UR1:    is_rep_by;
END_ENTITY;

ENTITY nd_path_node_diagram_shape_representation
    SUBTYPE OF (nd_path_node_shape_representation);
    founded_by              : nd_path_arc_diagram_shape_representation_context;
    has_founded_item        : nd_path_node_diagram_shape_item;
END_ENTITY;

ENTITY nd_path_node_diagram_shape_representation_context
    SUBTYPE OF      (representation_context);
END_ENTITY;

TYPE nd_path_node_diagram_shape_item = SELECT (axis1_placement,
    nd_path_node_diagram_shape_representation_replica);
END_TYPE;

ENTITY nd_path_node_diagram_shape_representation_replica;
    replicated_rep              : nd_specific_path_node_diagram_shape_representation;
    located_by                  : transformation;
END_ENTITY;

ENTITY nd_path_node_detail_shape_representation
    SUBTYPE OF      (nd_path_node_shape_representation);
    founded_by                  : nd_path_arc_detail_shape_representation_context;
    has_founded_item            : nd_path_node_detail_shape_item;
END_ENTITY;

ENTITY nd_path_node_detail_shape_representation_context
    SUBTYPE OF      (representation_context);
END_ENTITY;

TYPE nd_path_node_detail_shape_item = SELECT (
    axis2_placement,
    nd_path_node_detail_shape_representation_replica);
END_TYPE;

ENTITY nd_path_node_detail_shape_representation_replica;
    replicated_rep          : nd_specific_path_node_detail_shape_representation;
    located_by              : transformation;
END_ENTITY;

ENTITY nd_end_node_diagram_representation_relationship
    SUBTYPE OF      representation_relationship);
    base_rep                    : nd_path_node_diagram_shape_representation;
    associated_rep              : nd_distribution_end_occurrence_diagram_shape_representation;
    relocation_rel              : nd_end_node_diagram_representation_context_association;
END_ENTITY;

ENTITY nd_end_node_diagram_representation_context_association
    SUBTYPE OF      (representation_context_association);
    has_context                     : nd_path_arc_diagram_shape_representation_context;
    assoc_context_of                : nd_distribution_end_diagram_shape_representation_context;
    transform_operator              : transformation;
END_ENTITY;
```

```
ENTITY nd_end_node_detail_representation_relationship
    SUBTYPE OF      (representation_relationship);
    base_rep                    : nd_path_node_detail_shape_representation;
    associated_rep              : nd_distribution_end_occurrence_detail_shape_representation;
    relocation_rel              : nd_end_node_detail_representation_context_association;
END_ENTITY;

ENTITY nd_end_node_detail_representation_context_association
    SUBTYPE OF      (representation_context_association);
    has_context                     : nd_path_arc_detail_shape_representation_context;
    assoc_context_of                : nd_distribution_end_detail_shape_representation_context;
    transform_operator              : transformation;
END_ENTITY;

ENTITY nd_distribution_end_diagram_shape_representation_context
    SUBTYPE OF      (representation_context);
END_ENTITY;

ENTITY nd_distribution_end_detail_shape_representation_context
    SUBTYPE OF      representation_context);
END_ENTITY;

ENTITY nd_distribution_end_occurrence_shape_representation
    SUBTYPE OF      (representation)
    SUPERTYPE OF    (ONEOF
    (nd_distribution_end_occurrence_diagram_shape_representation,
    nd_distribution_end_occurrence_detail_shape_representation));
    is_shape_of             : nd_distribution_end_occurrence;
    location_type           : nd_distribution_end_location_type;
    has_style               : nd_shape_representation_style;
    is_rep_by               : n_identifier;
UNIQUE
UR1: is_rep_by;
END_ENTITY;

ENTITY nd_distribution_end_occurrence_diagram_shape_representation
    SUBTYPE OF      (nd_distribution_end_occurrence_shape_representation);
    founded_by          : nd_distribution_end_occurrence_diagram_shape_representation_context;
    has_founded_item    : nd_distribution_end_occurrence_diagram_shape_item;
END_ENTITY;

ENTITY nd_distribution_end_occurrence_diagram_shape_representation_context
  SUBTYPE OF (representation_context);
END_ENTITY;

(* The following is not modelled exactly as shown in related NIAM.
Eng_prt_oc_diag_shp_rep_replica is    shown as one of the
eng_prt_oc_diag_shp_item selections rather than separately.  *)
TYPE nd_distribution_end_occurrence_diagram_shape_item = SELECT (geometric_curve_set,
nd_distribution_end_occurrence_diagram_shape_representation_replica);
(* Note: May also be null when only centerline is being passed. *)
END_TYPE;

ENTITY nd_distribution_end_occurrence_diagram_shape_representation_replica
SUBTYPE OF      (representation_replica);
    replicated_rep              : nd_specific_part_diagram_shape_representation;
    located_by                  : transformation;
END_ENTITY;
```

```
ENTITY nd_distribution_end_occurrence_detail_shape_representation
	SUBTYPE OF	(nd_distribution_end_occurrence_shape_representation);
	founded_by		: nd_distribution_end_occurrence_detail_shape_representation_context;
	has_founded_item	: nd_distribution_end_occurrence_detail_shape_item;
END_ENTITY;

ENTITY nd_distribution_end_occurrence_detail_shape_representation_context
	SUBTYPE OF	representation_context);
END_ENTITY;

(* The following is not modelled exactly as shown in related NIAM.
Eng_prt_oc_dtl_shp_rep_replica is shown as one of the eng_prt_oc_dtl_shp_item
selections rather than separately.  *)
TYPE nd_distribution_end_occurrence_detail_shape_item = SELECT (
	csg_solid,
	csg_primitive,
	manifold_solid_brep,
	nd_distribution_end_occurrence_detail_shape_representation_replica);
(* Note: May also be null when only centerline is being passed. *)
END_TYPE;

ENTITY nd_distribution_end_occurrence_detail_shape_representation_replica
	SUBTYPE OF	representation_replica);
	replicated_rep		: nd_specific_part_detail_shape_representation;
	located_by		: transformation;
END_ENTITY;

ENTITY nd_end_node_occurrence_diagram_representation_relationship
	SUBTYPE OF		representation_relationship);
	base_rep		: nd_distribution_end_occurrence_diagram_shape_representation;
	associated_rep		: nd_path_node_diagram_shape_representation;
	relocation_rel:nd_end_node_occurrence_diagram_representation_context_association;
END_ENTITY;

ENTITY nd_end_node_occurrence_diagram_representation_context_association
	SUBTYPE OF	(representation_context_association);
	has_context		: nd_distribution_end_occurrence_diagram_shape_representation_context;
	assoc_context_of	: nd_path_node_diagram_shape_representation_context;
	transform_operator	: transformation;
END_ENTITY;

ENTITY nd_end_node_occurrence_detail_representation_relationship
	SUBTYPE OF	(representation_relationship);
	base_rep		: nd_distribution_end_occurrence_detail_shape_representation;
	associated_rep		: nd_path_node_detail_shape_representation;
	relocation_rel		: nd_end_node_occurrence_detail_representation_context_association;
END_ENTITY;

ENTITY nd_end_node_occurrence_detail_representation_context_association
	SUBTYPE OF	(representation_context_association);
	has_context		: nd_distribution_end_occurrence_detail_shape_representation_context;
	assoc_context_of	: nd_path_node_detail_shape_representation_context;
	transform_operator	: transformation;
END_ENTITY;

ENTITY nd_node_arc_detail_representation_context_association
	SUBTYPE OF	(representation_context_association);
```

```
    has_context                 : nd_path_arc_detail_shape_representation_context;
    assoc_context_of            : nd_path_node_detail_shape_representation_context;
    transform_operator          : transformation;
END_ENTITY;

ENTITY nd_node_arc_detail_representation_relationship
    SUBTYPE OF      (representation_context_association);
    base_rep                : nd_path_arc_detail_shape_representation;
    assoc_context_of        : nd_path_node_detail_shape_representation;
    relocation_rel          : nd_node_arc_detail_representation_context_association;
END_ENTITY;

ENTITY nd_node_arc_diagram_representation_context_association
    SUBTYPE OF      (representation_context_association);
    has_context                 : nd_path_arc_diagram_shape_representation_context;
    assoc_context_of            : nd_path_node_diagram_shape_representation_context;
    transform_operator          : transformation;
END_ENTITY;

ENTITY nd_node_arc_diagram_representation_relationship
    SUBTYPE OF      (representation_context_association);
    base_rep                : nd_path_arc_diagram_shape_representation;
    assoc_context_of        : nd_path_node_diagram_shape_representation;
    relocation_rel            nd_node_arc_diagram_representation_context_association;
END_ENTITY;

ENTITY nd_distribution_interconnection_occurrence_shape_representation
    SUPERTYPE OF   (ONEOF
    (nd_distribution_interconnection_occurrence_diagram_shape_representation,
    nd_distribution_interconnection_occurrence_detail_shape_representation));
    is_shape_of                     : nd_distribution_interconnection_occurrence;
    is_rep_by                       : n_identifier;
UNIQUE
UR1: is_rep_by;
END_ENTITY;

ENTITY nd_distribution_interconnection_occurrence_diagram_shape_representation
    SUBTYPE OF      (nd_distribution_interconnection_occurrence_shape_representation);
END_ENTITY;

ENTITY nd_distribution_interconnection_occurrence_detail_shape_representation
    SUBTYPE OF      (nd_distribution_interconnection_occurrence_shape_representation);
END_ENTITY;

ENTITY nd_specific_part_envelope_shape_representation;
    is_shape_of                 : nd_specific_engineering_part;
    has_envelope_type           : nd_specific_part_envelope_type;
    has_type                    : nd_shape_representation_type;
    is_rep_by                   : n_identifier;
UNIQUE
UR1:    is_rep_by;
END_ENTITY;

ENTITY nd_specific_part_envelope_shape_representation_context
    SUBTYPE OF      representation_context);
END_ENTITY;
```

```
TYPE nd_specific_part_envelope_shape_item = SELECT (
	csg_solid,
	csg_primitive,
	manifold_solid_brep);
END_TYPE;

ENTITY nd_specific_part_envelope_representation_relationship
	SUBTYPE OF	(representation_relationship);
	base_rep		: nd_specific_part_detail_shape_representation;
	associated_rep		: nd_specific_part_envelope_shape_representation;
	relocation_rep		: nd_specific_part_envelope_representation_context_association;
END_ENTITY;

ENTITY nd_specific_part_envelope_representation_context_association
	SUBTYPE OF	(representation_context_association);
	has_context		: nd_specific_part_detail_shape_representation_context;
	assoc_context_of	: nd_specific_part_envelope_shape_representation_context;
	transform_operator	: transformation;
END_ENTITY;

ENTITY nd_part_envelope_occurrence_shape_representation_context
	SUBTYPE OF	representation_context);
END_ENTITY;

TYPE nd_part_envelope_occurrence_shape_item = SELECT (
	csg_solid,
	csg_primitive,
	manifold_solid_brep,
	nd_part_envelope_occurrence_shape_representation_replica);
END_TYPE;

ENTITY nd_part_envelope_occurrence_shape_representation_replica;
	replicated_rep		: nd_specific_part_envelope_shape_representation;
	located_by		: transformation;
END_ENTITY;

ENTITY nd_part_envelope_occurrence_representation_context_association
	SUBTYPE OF	representation_context_association);
	has_context		: nd_engineering_part_occurrence_detail_shape_representation_context;
	assoc_context_of	: nd_part_envelope_occurrence_shape_representation_context;
	transform_operator	: transformation;
END_ENTITY;

ENTITY nd_part_envelope_occurrence_representation_relationship
	SUBTYPE OF	(representation_relationship);
	base_rep		: nd_engineering_part_occurrence_detail_shape_representation;
	associated_rep		: nd_part_envelope_occurrence_shape_representation;
	relocation_rep		: nd_part_envelope_occurrence_representation_context_association;
END_ENTITY;

ENTITY nd_attachment_representation_context
	SUBTYPE OF	(representation_context);
END_ENTITY;

END_SCHEMA;		(* end of niddesc_HVAC_application_protocol_v1_0 *)

(**********************************)
```

```
(* Begin Referenced Schemas *)
(**********************************)

SCHEMA support_resource_schema;
TYPE identifier = STRING;
END_TYPE;

TYPE label = STRING;
END_TYPE;

TYPE text = STRING;
END_TYPE;

END_SCHEMA;
SCHEMA product_definition_schema;
ENTITY product;
END_ENTITY;

ENTITY product_version;
END_ENTITY;

END_SCHEMA;
SCHEMA person_organization_schema;
ENTITY person_and_organization;
END_ENTITY;

ENTITY person;
END_ENTITY;

ENTITY organization;
END_ENTITY;
END_SCHEMA;

SCHEMA approval_schema;
ENTITY approval_status;
END_ENTITY;

END_SCHEMA;
SCHEMA date_time_schema;
ENTITY date_and_time;
END_ENTITY;

END_SCHEMA;
SCHEMA external_reference_schema;
    REFERENCE FROM support_resource_schema(label);
ENTITY externally_defined_item;
    name        : label;
    source      : external_source;
END_ENTITY;

ENTITY external_source;
    name        : label;
END_ENTITY;
END_SCHEMA;

SCHEMA  generic_measures_schema;
    REFERENCE FROM support_resource_schema(label);
```

```
TYPE real_type = REAL;
END_TYPE;


TYPE unit = SELECT (named_unit, derived_unit);
END_TYPE;
TYPE si_unit_name = ENUMERATION OF (
	metre, kilogram, second, ampere, kelvin, mole, candela,
	radian, steradian,
	hertz, newton, pascal, joule, watt, coulomb, volt, farad, ohm,
	siemens, weber, tesla, henry, degree_Celsius, lumen, lux,
	becquerel, gray, sievert);
END_TYPE;

TYPE si_prefix = ENUMERATION OF (
	exa, peta, tera, giga, mega, kilo, hecto, deca, deci,
	centi, milli, micro, nano, pico, femto, atto );
END_TYPE;
TYPE value_select = SELECT (specified_value, unspecified_value);
END_TYPE;
TYPE unspecified_value = label;
END_TYPE;
TYPE specified_value = NUMBER;
END_TYPE;

ENTITY named_unit
	SUPERTYPE OF	(ONEOF (si_unit, converted_unit, si_unrelated_unit) );
	dimensions		: dimensional_exponents;
END_ENTITY;

ENTITY si_unit;
	prefix		: OPTIONAL si_prefix;
	name		: si_unit_name;
DERIVE
	dimensions	: dimensional_exponents
			:= dimensions_for_si_unit (SELF.name);
END_ENTITY;

FUNCTION dimensions_for_si_unit (n : si_unit_name ) : dimensional_exponents;
END_FUNCTION;

ENTITY converted_unit
	SUBTYPE OF	: ( named_unit );
	name		: label;
	factor		: measure;
DERIVE
	dimensions	: dimensional_exponents := SELF.factor.dimensions;
WHERE
	WR1:		'GENERIC_MEASURES_SCHEMA.SPECIFIED_VALUE' IN TYPEOF
(factor.amount);
END_ENTITY;

ENTITY si_unrelated_unit
	SUBTYPE OF	( named_unit );
	name		:label;
END_ENTITY;
```

```
ENTITY measure;
    amount                      : value_select;
    unit_component              : unit;
DERIVE
    dimensions                  : dimensional_exponents
                                := derive_dimensional_exponents
(SELF.unit_component);
END_ENTITY;

ENTITY dimensional_exponents;
    length_exponent                         : REAL;
    mass_exponent                           : REAL;
    time_exponent                           : REAL;
    electric_current_exponent               : REAL;
    thermodynamic_temperature_exponent      : REAL;
    amount_of_substance_exponent            : REAL;
    luminous_intensity_exponent             : REAL;
END_ENTITY;

ENTITY derived_unit_element;
    unit            : named_unit;
    exponent        : REAL;
END_ENTITY;

ENTITY derived_unit;
    elements            :SET [1:?] OF named_unit;
END_ENTITY;

FUNCTION derive_dimensional_exponents (x : unit) : dimensional_exponents;
END_FUNCTION;

ENTITY length_unit
    SUBTYPE OF (named_unit);
WHERE
    WR1: (dimensions.length_exponent=1.0) AND
        (dimensions.mass_exponent=0.0) AND
        (dimensions.time_exponent=0.0) AND
        (dimensions.electric_current_exponent=0.0) AND
        (dimensions.thermodynamic_temperature_exponent=0.0) AND
        (dimensions.amount_of_substance_exponent=0.0) AND
        (dimensions.luminous_intensity_exponent=0.0);
END_ENTITY;

(* volume = length**3  *)
ENTITY volume_unit
    SUBTYPE OF      (named_unit);
WHERE
    WR1: (dimensions.length_exponent=3.0) AND
        (dimensions.mass_exponent=0.0) AND
        (dimensions.time_exponent=0.0) AND
        (dimensions.electric_current_exponent=0.0) AND
        (dimensions.thermodynamic_temperature_exponent=0.0) AND
        (dimensions.amount_of_substance_exponent=0.0) AND
        (dimensions.luminous_intensity_exponent=0.0);
END_ENTITY;

ENTITY electric_current_unit
    SUBTYPE OF (named_unit);
```

```
WHERE
    WR1: (dimensions.length_exponent=0.0) AND
        (dimensions.mass_exponent=0.0) AND
        (dimensions.time_exponent=0.0) AND
        (dimensions.electric_current_exponent=1.0) AND
        (dimensions.thermodynamic_temperature_exponent=0.0) AND
        (dimensions.amount_of_substance_exponent=0.0) AND
        (dimensions.luminous_intensity_exponent=0.0);
END_ENTITY;

ENTITY plane_angle_unit
    SUBTYPE OF (named_unit);
WHERE
    WR1: (dimensions.length_exponent=0.0) AND
        (dimensions.mass_exponent=0.0) AND
        (dimensions.time_exponent=0.0) AND
        (dimensions.electric_current_exponent=0.0) AND
        (dimensions.thermodynamic_temperature_exponent=0.0) AND
        (dimensions.amount_of_substance_exponent=0.0) AND
        (dimensions.luminous_intensity_exponent=0.0);
END_ENTITY;

ENTITY thermodynamic_temperature_unit
    SUBTYPE OF (named_unit);
WHERE
    WR1: (dimensions.length_exponent=0.0) AND
        (dimensions.mass_exponent=0.0) AND
        (dimensions.time_exponent=0.0) AND
        (dimensions.electric_current_exponent=0.0) AND
        (dimensions.thermodynamic_temperature_exponent=1.0) AND
        (dimensions.amount_of_substance_exponent=0.0) AND
        (dimensions.luminous_intensity_exponent=0.0);
END_ENTITY;

(* Begin non-Part 41 measures *)

ENTITY velocity_unit
    SUBTYPE OF (named_unit);
WHERE
    WR1: (dimensions.length_exponent=1.0) AND
        (dimensions.mass_exponent=0.0) AND
        (dimensions.time_exponent=-1.0) AND
        (dimensions.electric_current_exponent=0.0) AND
        (dimensions.thermodynamic_temperature_exponent=0.0) AND
        (dimensions.amount_of_substance_exponent=0.0) AND
        (dimensions.luminous_intensity_exponent=0.0);
END_ENTITY;

ENTITY time_unit
    SUBTYPE OF (named_unit);
WHERE
    WR1: (dimensions.length_exponent=0.0) AND
        (dimensions.mass_exponent=0.0) AND
        (dimensions.time_exponent=1.0) AND
        (dimensions.electric_current_exponent=0.0) AND
        (dimensions.thermodynamic_temperature_exponent=0.0) AND
        (dimensions.amount_of_substance_exponent=0.0) AND
```

```
            (dimensions.luminous_intensity_exponent=0.0);
END_ENTITY;

(* pressure_value = force/l**2 = (m*l/t**2)/l**2 = m/l*t**2  *)

ENTITY pressure_unit
      SUBTYPE OF (named_unit);
WHERE
      WR1: (dimensions.length_exponent=-1.0) AND
            (dimensions.mass_exponent=1.0) AND
            (dimensions.time_exponent=-2.0) AND
            (dimensions.electric_current_exponent=0.0) AND
            (dimensions.thermodynamic_temperature_exponent=0.0) AND
            (dimensions.amount_of_substance_exponent=0.0) AND
            (dimensions.luminous_intensity_exponent=0.0);
END_ENTITY;

(* flow_rate = l**3/t  *)

ENTITY flow_rate_unit
      SUBTYPE OF (named_unit);
WHERE
      WR1: (dimensions.length_exponent=3.0) AND
            (dimensions.mass_exponent=0.0) AND
            (dimensions.time_exponent=-1.0) AND
            (dimensions.electric_current_exponent=0.0) AND
            (dimensions.thermodynamic_temperature_exponent=0.0) AND
            (dimensions.amount_of_substance_exponent=0.0) AND
            (dimensions.luminous_intensity_exponent=0.0);
END_ENTITY;

(* heat_rate = work/t = force*l/t = (m*l/t**2)*l/t = m*l**2/t**3  *)

ENTITY heat_rate_unit
      SUBTYPE OF (named_unit);
WHERE
      WR1: (dimensions.length_exponent=2.0) AND
            (dimensions.mass_exponent=1.0) AND
            (dimensions.time_exponent=-3.0) AND
            (dimensions.electric_current_exponent=0.0) AND
            (dimensions.thermodynamic_temperature_exponent=0.0) AND
            (dimensions.amount_of_substance_exponent=0.0) AND
            (dimensions.luminous_intensity_exponent=0.0);
END_ENTITY;

(* noise is non-dimensional ratio  *)

ENTITY noise_unit
      SUBTYPE OF (named_unit);
WHERE
      WR1: (dimensions.length_exponent=0.0) AND
            (dimensions.mass_exponent=0.0) AND
            (dimensions.time_exponent=0.0) AND
            (dimensions.electric_current_exponent=0.0) AND
            (dimensions.thermodynamic_temperature_exponent=0.0) AND
            (dimensions.amount_of_substance_exponent=0.0) AND
            (dimensions.luminous_intensity_exponent=0.0);
END_ENTITY;
```

```
(* force_value = m*acceleration = m*l/t**2       *)

ENTITY force_unit
      SUBTYPE OF (named_unit);
WHERE
      WR1: (dimensions.length_exponent=1.0) AND
            (dimensions.mass_exponent=1.0) AND
            (dimensions.time_exponent=-2.0) AND
            (dimensions.electric_current_exponent=0.0) AND
            (dimensions.thermodynamic_temperature_exponent=0.0) AND
            (dimensions.amount_of_substance_exponent=0.0) AND
            (dimensions.luminous_intensity_exponent=0.0);
END_ENTITY;

ENTITY inertia_unit
      SUBTYPE OF (named_unit);
WHERE
      WR1: (dimensions.length_exponent=4.0) AND
            (dimensions.mass_exponent=0.0) AND
            (dimensions.time_exponent=0.0) AND
            (dimensions.electric_current_exponent=0.0) AND
            (dimensions.thermodynamic_temperature_exponent=0.0) AND
            (dimensions.amount_of_substance_exponent=0.0) AND
            (dimensions.luminous_intensity_exponent=0.0);
END_ENTITY;

ENTITY product_of_inertia_unit
      SUBTYPE OF (named_unit);
WHERE
      WR1: (dimensions.length_exponent=5.0) AND
            (dimensions.mass_exponent=0.0) AND
            (dimensions.time_exponent=0.0) AND
            (dimensions.electric_current_exponent=0.0) AND
            (dimensions.thermodynamic_temperature_exponent=0.0) AND
            (dimensions.amount_of_substance_exponent=0.0) AND
            (dimensions.luminous_intensity_exponent=0.0);
END_ENTITY;

(* power_value = work/t = force*l/t = m*accel*l/t = m*l**2/t**3   *)

ENTITY power_unit
      SUBTYPE OF (named_unit);
WHERE
      WR1: (dimensions.length_exponent=2.0) AND
            (dimensions.mass_exponent=1.0) AND
            (dimensions.time_exponent=-3.0) AND
            (dimensions.electric_current_exponent=0.0) AND
            (dimensions.thermodynamic_temperature_exponent=0.0) AND
            (dimensions.amount_of_substance_exponent=0.0) AND
            (dimensions.luminous_intensity_exponent=0.0);
END_ENTITY;

ENTITY frequency_unit
      SUBTYPE OF (named_unit);
WHERE
      WR1: (dimensions.length_exponent=0.0) AND
            (dimensions.mass_exponent=0.0) AND
```

```
            (dimensions.time_exponent=-1.0) AND
            (dimensions.electric_current_exponent=0.0) AND
            (dimensions.thermodynamic_temperature_exponent=0.0) AND
            (dimensions.amount_of_substance_exponent=0.0) AND
            (dimensions.luminous_intensity_exponent=0.0);
END_ENTITY;

ENTITY voltage_unit
      SUBTYPE OF (named_unit);
WHERE
      WR1: (dimensions.length_exponent=-1.0) AND
            (dimensions.mass_exponent=1.0) AND
            (dimensions.time_exponent=-2.0) AND
            (dimensions.electric_current_exponent=0.0) AND
            (dimensions.thermodynamic_temperature_exponent=0.0) AND
            (dimensions.amount_of_substance_exponent=0.0) AND
            (dimensions.luminous_intensity_exponent=0.0);
END_ENTITY;

(* linear_stiffness = force/l = m*accel/l = m*l/t**2/l = m/t**2  *)

ENTITY linear_stiffness_unit
      SUBTYPE OF (named_unit);
WHERE
      WR1: (dimensions.length_exponent=0.0) AND
            (dimensions.mass_exponent=1.0) AND
            (dimensions.time_exponent=-2.0) AND
            (dimensions.electric_current_exponent=0.0) AND
            (dimensions.thermodynamic_temperature_exponent=0.0) AND
            (dimensions.amount_of_substance_exponent=0.0) AND
            (dimensions.luminous_intensity_exponent=0.0);
END_ENTITY;

(* angular_stiffness = dist*force/degree = l*m*l/t**2/degree   *)

ENTITY angular_stiffness_unit
      SUBTYPE OF (named_unit);
WHERE
      WR1: (dimensions.length_exponent=2.0) AND
            (dimensions.mass_exponent=1.0) AND
            (dimensions.time_exponent=-2.0) AND
            (dimensions.electric_current_exponent=0.0) AND
            (dimensions.thermodynamic_temperature_exponent=0.0) AND
            (dimensions.amount_of_substance_exponent=0.0) AND
            (dimensions.luminous_intensity_exponent=0.0);
END_ENTITY;
(* relative_humidity = dimensionless %   *)
ENTITY relative_humidity_unit
      SUBTYPE OF (named_unit);
WHERE
      WR1: (dimensions.length_exponent=0.0) AND
            (dimensions.mass_exponent=0.0) AND
            (dimensions.time_exponent=0.0) AND
            (dimensions.electric_current_exponent=0.0) AND
            (dimensions.thermodynamic_temperature_exponent=0.0) AND
            (dimensions.amount_of_substance_exponent=0.0) AND
            (dimensions.luminous_intensity_exponent=0.0);
END_ENTITY;
```

```
(* resistance = force *)

ENTITY resistance_unit
	SUBTYPE OF (named_unit);
WHERE
	WR1: (dimensions.length_exponent=1.0) AND
		(dimensions.mass_exponent=1.0) AND
		(dimensions.time_exponent=-2.0) AND
		(dimensions.electric_current_exponent=0.0) AND
		(dimensions.thermodynamic_temperature_exponent=0.0) AND
		(dimensions.amount_of_substance_exponent=0.0) AND
		(dimensions.luminous_intensity_exponent=0.0);
END_ENTITY;

(* torque = length*force  *)

ENTITY torque_unit
	SUBTYPE OF (named_unit);
WHERE
	WR1: (dimensions.length_exponent=2.0) AND
		(dimensions.mass_exponent=1.0) AND
		(dimensions.time_exponent=-2.0) AND
		(dimensions.electric_current_exponent=0.0) AND
		(dimensions.thermodynamic_temperature_exponent=0.0) AND
		(dimensions.amount_of_substance_exponent=0.0) AND
		(dimensions.luminous_intensity_exponent=0.0);
END_ENTITY;

ENTITY KVA_unit
	SUBTYPE OF (named_unit);
WHERE
	WR1: (dimensions.length_exponent=1.0) AND
		(dimensions.mass_exponent=1.0) AND
		(dimensions.time_exponent=-2.0) AND
		(dimensions.electric_current_exponent=0.0) AND
		(dimensions.thermodynamic_temperature_exponent=0.0) AND
		(dimensions.amount_of_substance_exponent=0.0) AND
		(dimensions.luminous_intensity_exponent=0.0);
END_ENTITY;

ENTITY luminous_intensity_unit
	SUBTYPE OF (named_unit);
WHERE
	WR1: (dimensions.length_exponent=0.0) AND
		(dimensions.mass_exponent=0.0) AND
		(dimensions.time_exponent=-0.0) AND
		(dimensions.electric_current_exponent=0.0) AND
		(dimensions.thermodynamic_temperature_exponent=0.0) AND
		(dimensions.amount_of_substance_exponent=0.0) AND
		(dimensions.luminous_intensity_exponent=1.0);
END_ENTITY;

ENTITY length_measure
	SUBTYPE OF (measure);
WHERE
	WR1: SELF.unit_component = length_unit;
END_ENTITY;
```

```
ENTITY time_measure
      SUBTYPE OF (measure);
WHERE
      WR1: SELF.unit_component = time_unit;
END_ENTITY;

ENTITY electric_current_measure
      SUBTYPE OF (measure);
WHERE
      WR1: SELF.unit_component = electric_current_unit;
END_ENTITY;

ENTITY plane_angle_measure
      SUBTYPE OF (measure);
WHERE
      WR1: SELF.unit_component = plane_angle_unit;
END_ENTITY;

ENTITY thermodynamic_temperature_measure
      SUBTYPE OF (measure);
WHERE
      WR1: SELF.unit_component = thermodynamic_temperature_unit;
END_ENTITY;

ENTITY velocity_measure
      SUBTYPE OF (measure);
WHERE
      WR1: SELF.unit_component = velocity_unit;
END_ENTITY;

ENTITY pressure_measure
      SUBTYPE OF (measure);
WHERE
      WR1: SELF.unit_component = pressure_unit;
END_ENTITY;

ENTITY flow_rate_measure
      SUBTYPE OF (measure);
WHERE
      WR1: SELF.unit_component = flow_rate_unit;
END_ENTITY;

ENTITY heat_rate_measure
      SUBTYPE OF (measure);
WHERE
      WR1: SELF.unit_component = heat_rate_unit;
END_ENTITY;
ENTITY noise_measure
      SUBTYPE OF (measure);
WHERE
      WR1: SELF.unit_component = noise_unit;
END_ENTITY;

ENTITY force_measure
      SUBTYPE OF (measure);
WHERE
```

```
    WR1: SELF.unit_component = force_unit;
END_ENTITY;

ENTITY inertia_measure
    SUBTYPE OF (measure);
WHERE
    WR1: SELF.unit_component = inertia_unit;
END_ENTITY;

ENTITY product_of_inertia_measure
    SUBTYPE OF (measure);
WHERE
    WR1: SELF.unit_component = product_of_inertia_unit;
END_ENTITY;

ENTITY power_measure
    SUBTYPE OF (measure);
WHERE
    WR1: SELF.unit_component = power_unit;
END_ENTITY;

ENTITY frequency_measure
    SUBTYPE OF (measure);
WHERE
    WR1: SELF.unit_component = frequency_unit;
END_ENTITY;

ENTITY linear_stiffness_measure
    SUBTYPE OF (measure);
WHERE
    WR1: SELF.unit_component = linear_stiffness_unit;
END_ENTITY;

ENTITY angular_stiffness_measure
    SUBTYPE OF (measure);
WHERE
    WR1: SELF.unit_component = angular_stiffness_unit;
END_ENTITY;

ENTITY relative_humidity_measure
    SUBTYPE OF (measure);
WHERE
    WR1: SELF.unit_component = relative_humidity_unit;
END_ENTITY;

ENTITY torque_measure
    SUBTYPE OF (measure);
WHERE
    WR1: SELF.unit_component = torque_unit;
END_ENTITY;

ENTITY KVA_measure
    SUBTYPE OF (measure);
WHERE
    WR1: SELF.unit_component = KVA_unit;
END_ENTITY;
```

```
ENTITY voltage_measure
      SUBTYPE OF (measure);
WHERE
      WR1: SELF.unit_component = voltage_unit;
END_ENTITY;

ENTITY luminous_intensity_measure
      SUBTYPE OF (measure);
WHERE
      WR1: SELF.unit_component = luminous_intensity_unit;
END_ENTITY;

ENTITY resistance_measure
      SUBTYPE OF (measure);
WHERE
      WR1: SELF.unit_component=resistance_unit;
END_ENTITY;

ENTITY volume_measure
      SUBTYPE OF (measure);
WHERE
      WR1: SELF.unit_component = volume_unit;
END_ENTITY;

END_SCHEMA;

(*******************************)
(* Begin Representation Schema *)
(* NOTE: This is the old version of Part 43 (1992) somewhat modified to *)
(*        make use of  some current constructs from Parts 43 and 42 *)
(*******************************)

SCHEMA representation_schema;
      REFERENCE FROM geometry_schema ( cartesian_point, direction,
      cartesian_transformation_operator);

ENTITY geometric_representation_item
      SUBTYPE OF (representation_item);
END_ENTITY;

ENTITY representation_item;
END_ENTITY;

ENTITY representation;
      founded_item              : OPTIONAL geometric_representation_item;
      rep_context               : representation_context;
      WHERE
      WR1: SIZEOF (USEDIN (SELF , '') - USEDIN (SELF ,
            'REPRESENTATION_SCHEMA.REPRESENTATION_RELATIONSHIP.' +
            'BASE_REPRESENTATION')) > 0;
      WR2: SIZEOF (USEDIN (SELF ,'REPRESENTATION_SCHEMA.' +
            'REPRESENTATION_RELATIONSHIP.BASE_REPRESENTATION')) > 0
            OR EXISTS (SELF.founded_item);
END_ENTITY;

ENTITY representation_context;
      dimensionality                        : INTEGER;
      WHERE
```

```
    WR1: (SELF.dimensionality = 2) XOR (SELF.dimensionality = 3);
END_ENTITY;

ENTITY representation_context_association;
    base_context                : representation_context;
    associated_context          : representation_context;
    transformation_operator     : transformation;
    WHERE
    wr1:  SELF.base_context.dimensionality =
          SELF.associated_context.dimensionality;
    wr2:  founded_in_context
          (SELF.transformation_operator , SELF.base_context);
    wr3:  acyclic_representation_context_association
          (SELF,SELF.associated_context, SELF.transformation_operator);
END_ENTITY;

ENTITY representation_relationship;
    base_representation         : representation;
    associated_representation   : representation;
    _representation             : OPTIONAL representation_context_association;
    WHERE
    wr1: acyclic_representation_relationship
          (SELF, SELF.associated_representation);
    wr2:      OT EXISTS (SELF.relocation_representation) XOR
          ((SELF.relocation_representation.base_context :=:
          SELF.base_representation.rep_context) AND
          (SELF.relocation_representation.associated_context :=:
          SELF.associated_representation.rep_context));
    wr3: (SELF.base_representation.rep_context :=:
          SELF.associated_representation.rep_context) XOR
          (EXISTS (SELF.relocation_representation));
END_ENTITY;

ENTITY representation_replica;
    replicated_representation       : representation;
    location                        : transformation;
END_ENTITY;
(*NOTE: The entity TRANSFORMATION is from the old Part 43. Its definition
     is adapted for the current [N141] Part 42.*)
ENTITY transformation
    SUBTYPE OF (cartesian_transformation_operator);
END_ENTITY;

FUNCTION founded_in_context(a: generic; b: generic): generic;
END_FUNCTION;
FUNCTION acyclic_representation_context_association(a: generic; b: generic; c: generic): generic;
END_FUNCTION;
FUNCTION acyclic_representation_relationship(a: generic; b: generic): generic;
END_FUNCTION;
FUNCTION topology_uses_geometry(a: generic): generic;
END_FUNCTION;

(* Functions from representation to be added at a later date. *)
END_SCHEMA;

(*********************************)
(* Dummy schemas to resolve references *)
(*********************************)
```

```
SCHEMA niddesc_ship_structural_schema;
ENTITY ns_structural_part_occurrence;
END_ENTITY;
END_SCHEMA;

SCHEMA geometric_model_schema;
      REFERENCE FROM representation_schema (geometric_representation_item);
ENTITY facetted_solid_brep;
END_ENTITY;

ENTITY swept_area_solid;
END_ENTITY;
TYPE csg_primitive=SELECT (sphere,block,right_angular_wedge,
      torus,right_circular_cone,right_circular_cylinder);
END_TYPE;
TYPE csg_select=SELECT (boolean_result, csg_primitive);
END_TYPE;
ENTITY half_space_solid;
END_ENTITY;
ENTITY        geometric_set;
END_ENTITY;
ENTITY        geometric_curve_set;
END_ENTITY;
ENTITY        geometric_set_replica;
END_ENTITY;
ENTITY         solid_model;
END_ENTITY;
ENTITY        manifold_solid_brep;
END_ENTITY;
ENTITY        csg_solid;
END_ENTITY;
ENTITY        sphere;
END_ENTITY;
ENTITY        right_circular_cone;
END_ENTITY;
ENTITY        right_circular_cylinder;
END_ENTITY;
ENTITY        torus;
END_ENTITY;
ENTITY        block;
END_ENTITY;
ENTITY        right_angular_wedge;
END_ENTITY;
ENTITY boolean_result
      SUBTYPE OF(geometric_representation_item);
      operator              : boolean_operator;
      first_operand         : boolean_operand;
      second_operand        : boolean_operand;
END_ENTITY;
TYPE boolean_operator=ENUMERATION OF(union, intersection, difference);
END_TYPE;
TYPE boolean_operand=SELECT(solid_model, half_space_solid,
                        csg_primitive, boolean_result);
END_TYPE;
END_SCHEMA;
```

```
SCHEMA geometry_schema;
ENTITY placement;
END_ENTITY;
ENTITY axis1_placement;
END_ENTITY;
ENTITY axis2_placement;
END_ENTITY;
ENTITY axis2_placement_2d
    SUBTYPE OF (axis2_placement);
END_ENTITY;
ENTITY axis2_placement_3d
    SUBTYPE OF (axis2_placement);
END_ENTITY;
ENTITY cartesian_transformation_operator;
END_ENTITY;
ENTITY curve;
END_ENTITY;
ENTITY    bounded_curve;
END_ENTITY;
ENTITY    b_spline_curve;
END_ENTITY;
ENTITY    polyline;
END_ENTITY;
ENTITY    trimmed_curve;
END_ENTITY;
ENTITY    conic;
END_ENTITY;
ENTITY    circle;
END_ENTITY;
ENTITY    ellipse;
END_ENTITY;
ENTITY    hyperbola;
END_ENTITY;
ENTITY    parabola;
END_ENTITY;
ENTITY    line;
END_ENTITY;
ENTITY    point;
END_ENTITY;
ENTITY    cartesian_point;
END_ENTITY;
ENTITY    point_on_curve;
END_ENTITY;
ENTITY    vector;
END_ENTITY;
ENTITY    direction;
END_ENTITY;
END_SCHEMA;

SCHEMA topology_schema;
ENTITY    topological_representation_item;
END_ENTITY;
ENTITY    connected_edge_set;
END_ENTITY;
ENTITY    connected_face_set;
END_ENTITY;
ENTITY    edge;
END_ENTITY;
```

```
ENTITY        face;
END_ENTITY;
ENTITY        face_bound;
END_ENTITY;
ENTITY        loop;
END_ENTITY;
ENTITY        edge_loop;
END_ENTITY;
ENTITY        poly_loop;
END_ENTITY;
ENTITY        vertex_loop;
END_ENTITY;
ENTITY        path;
END_ENTITY;
ENTITY        closed_shell;
END_ENTITY;
ENTITY        open_shell;
END_ENTITY;
ENTITY        vertex_shell;
END_ENTITY;
ENTITY        wire_shell;
END_ENTITY;
ENTITY        vertex;
END_ENTITY;
ENTITY        vertex_point;
END_ENTITY;
END_SCHEMA;

SCHEMA presentation_definition_schema;
ENTITY presentation_element_select;
END_ENTITY;
ENTITY annotation;
END_ENTITY;
ENTITY annotation_occurrence;
END_ENTITY;
ENTITY annotation_occurrence_group;
END_ENTITY;
END_SCHEMA;
```

6. Conformance Requirements

The successful use of this application protocol requires the translation processors toconform to this AP specification. The purpose of conformance testing is to increase confidence in the successful exchange of information among different implementations of the AP.

This AP requires that the functionality of the HVAC system constructs of the ARM be preserved in the translation into and out of the AIM-specified format. Therefore to support this AP a system must support the constructs in the ARM to be compliant. An AP compliant preprocessor must convert each HVAC construct of the ARM into the specified STEP physical file constructs of the AIM with the required attributes and values. An AP compliant postprocessor must convert each STEP physical file construct of the AIM into native constructs replicating the geometry, attributes, and relationships of the HVAC constructs specified in the ARM. The functionality of the ARM HVAC constructs must be preserved through these translation processes.

Because of the complexity of this AP it is not feasible to test all functionality features of all possible ARM constructs exhaustively.

6.1 Processor conformance requirements

The conformance requirements for implementation of this AP are:

— Preprocessor:

a) The neutral files created by a compliant preprocessor shall conform to the STEP physical file format specification [4].

b) The neutral files created by a compliant preprocessor shall contain only those STEP physical file constructs defined in the AIM (section 5).

c) A compliant preprocessor shall convert each construct of the ARM into the corresponding construct(s) specified in the AIM.

— Postprocesser:

a) A compliant processor shall read and process files adhering to the STEP physical file format specification [4].

b) A compliant postprocesser shall read and interpret files containing the constructs specified by the AIM (section 5).

c) A compliant postprocesser shall convert each construct of the AIM into native constructs representing the ARM constructs (entities, attributes and relationships) from which the AIM construct was originally produced.

6.2 NIDDESC HVAC application protocol test groups

The NIDDESC HVAC application protocol test cases are divided into the following test groups:

— TG-1: HVAC system structure
— TG-2: HVAC system flow data
— TG-3: HVAC system test - system performance and balance test
— TG-4: engineering part data
— TG-5: network connectivity
— TG-6: attachments
— TG-7: insulation
— TG-8: HVAC paths
— TG-9: HVAC assembly
— TG-10: HVAC joints
— TG-11: miscellaneous queries
— TG-12: catalog external reference

Each test group contains one or more test cases composed of a test purpose and a prose description of the test procedure organized into one or more test steps. When these prose descriptions are converted to a formal language and parameter values (identifiers and attribute values) are provided for the constructs described in the test cases in a set of test data they can be used to generate an *executable* test case.

6.3 NIDDESC HVAC application protocol test case descriptions

This section describes the test cases in the various test groups in terms of their purpose and procedural description. These descriptions are phrased in terms appropriate to a postprocesser operation (e.g. “list”, “retrieve”, “find”, etc.) The corresponding preprocessor operations (e.g. “encode”, “store”, etc.) are to be substituted for preprocessor test formulation.

6.3.1 TG-1: HVAC system structure

Test purposes: The purpose of this test is to demonstrate the ability of the translator to process the product structure of a candidate HVAC system model and represent the data associated with the HVAC system.

a) For a given HVAC system occurrence, list its hvac_system_number, hvac_system_abbreviation, hvac_system_diagram_number_organization_ID, and hvac_system_organization_diagram_number.

b) For the HVAC system occurrence in (a), list all of its first level;
   — HVAC heater, HVAC fan and HVAC coil occurrences.
   — HVAC sections

— HVAC loads (compartment_occurrences or equipment_occurrences) on the HVAC system
— engineering parts[1]

c) For a given HVAC fan/coil assembly, list its “owner” HVAC system.

6.3.2 TG-2: HVAC system flow data

Test purposes: The purpose of this test is to demonstrate the ability of the translator to process all the elements of HVAC system flow data.

a) For the HVAC system identified in section 6.3.1 (a), list all of its system_operating_condition_ID's and system_operating_condition_descriptions.

b) For one of the system operating conditions from (a), list all of its associated hvac_section_state_IDs, hvac_section_state_pressure_losses, hvac_section_state_flow_rates, hvac_section_state_available_pressures, and “from” and “to” hvac_port_occurrence_IDs.

c) For the system operating condition from (b), list all of its hvac_port_state_IDs, their hvac_port_occurrence_IDs, hvac_port_state_temperatures, hvac_port_state_available_pressures, hvac_port_state_flow_rates and hvac_port_state_flow_directions.

d) For the system operating condition from (b) list each of its hvac_FCD_operating_conditions and the condition's corresponding hvac_fcd_occurrence_ID (SPIV_ID).

6.3.3 TG-3: HVAC system test - system performance and balance test

Test purposes: The purpose of this test is to demonstrate the ability of the translator to process the data and structure of an HVAC system test entity.

a) For the HVAC system occurrence identified in section 6.3.1 (a), retrieve its hvac system test entity whose test_type attribute is “system_performance_&_balance” and list its test_memo_num-ber, test_memo_title and test_memo_revision.

b) For the HVAC system test from (a), list each of its HVAC system test element’ hvac_system_test_element_ID and required specific_instrument_ID (SPIV_ID).

c) For a HVAC system test element from (b), list all of its hvac_system_occurrence_IDs.

d) For one of the hvac_system_occurrences from (c), list each of its served HVAC loads, and its hvac_port/load_occurrence_IDs and their hvac_port_location_description and hvac_port_required_air_flow.

---

[1]. (via SPIV_relationship which HAS_CONTEXT_OF the electrical_system_occurrence, where SPIV_relationship_type := 'design_product_structure', and which HAS_COMPONENT_OF SPIV's of type engineering_part_occurrence.)

6.3.4 TG-4: engineering part data

Test purposes: The purpose of this test is to demonstrate the ability of the translator to process the data associated with the various principal subtypes of engineering part.

a) For an hvac_duct_occurrence, retrieve and list its:
   — specific_hvac_duct_pressure_loss/foot
   — specific_hvac_duct_maximum_velocity
   — specific_hvac_part_thickness/gauge_format
   — specific_hvac_part_thickness/gauge_value

b) For an hvac_component_occurrence, retrieve and list its:
   — pressure_loss_coefficient
   — fixed_pressure_loss/gain
   — required_thermal_insulation_specification_ID
   — required_noise_attenuation_specification_ID
   — velocity
   — velocity_pressure
   — pressure_loss/gain

c) For a standard hvac_port_occurrence of the hvac_component_occurrence of (b), list its:
   — specific_hvac_port_type
   — hvac_port_cross_section_ID
   — specific_cross_section_type_name
   — cross_section_height_value
   — cross_section_width_value
   — cross_section_corner_radius_value
   — hvac_port_equivalent_diameter
   — distribution_end_location_type

d) For an equipment occurrence, retrieve and list its:
   — engineering_part_description
   — engineering_part_specification
   — engineering_part_material
   — engineering_part_material_specification
   — engineering_part_identifier's engineering_part_part_number_organization_ID and engineer-ing_part_organization_part_number
   — engineering_part_drawing_number_organization_ID
   — engineering_part_organization_drawing_number
   — engineering_part_organization_drawing_find_number
   — engineering_part_dry_weight (via specific_engineering_part_implementation HAS weight condition where weight_type := ‘dry’)
   — engineering_part_wet_weight (via specific_engineering_part_implementation HAS weight condition where weight_type := ‘wet’)
   — engineering_part_maximum_allowable_wet_weight

— engineering_part_center_of_gravity (from center_of_gravity OF the weight_condition OF the specific_engineering_part_implementation, where weight_type := ‘wet’)
— engineering_part_manufacturer_name
— engineering_part_manufacturer_part_number
— NAVSEA_drawing_number
— MIL-STD_number
— allowance_parts_list_number
— functional_group_code (functional_identifier OF engineering_part_occurrence_design where functional_identifier_code_base OF functional_identifier := 'ESWBS')
— engineering_part_service
— engineering_part_location_description
— engineering_part_required_shock_class
— equipment_source
— equipment_manufacturers_drawing_number
— equipment_shock_qualification_status
— each of its Equipment_Interchangeability descriptions
— each HAS_INPUT_POWER_AT_RATED_CONDITION power
— each HAS_OUTPUT power
— equipment rated capacity (from specific_equipment_design via HAS_FLOW_CONDITION of the medium_flow that HAS_CONDITION_DESCRIPTION := ‘rated’)
— equipment_safety_consideration_description
— equipment_foundation_finish
— equipment_alignment_flatness_tolerance
— equipment_alignment_angularity_tolerance
— equipment DESIGN pressure_value (rating)
— equipment DESIGN temperature_value
— each Equipment Applicable Specification specification_ID
— equipment_required_insulation_type
— equipment_required_insulation_thickness
— equipment_name
— each of its Equipment Required Test test_IDs
— equipment_system_conformance_specification_ID
— each of its Equipment Installation Instruction installation_instruction_IDs
— each of its Equipment Removal Route Instruction instruction_IDs
— each of its Equipment Operating Conditions'
    system_operating_condition_ID
    each of its equipment_flow_rate mediums and flow_rate_values
    equipment_heat_dissipation_to_air
    equipment_heat_dissipation_to_FW
    equipment_heat_dissipation_to_SW
    equipment_vibration_frequency
    equipment_vibration_amplitude
— its equipment resilient mount data equipment_resilient_mount_specification_ID and, for each of its equipment shock movement directions their:
equipment_inertia
    equipment_product_of_inertia
    equipment_shock_movement_direction

equipment_shock_movement_magnitude

c) For an indicator_alarm, retrieve and list its:
   — instrument_type
   — instrument_measured_parameter
   — its list of detected_control_parameter names and set_point_values
   — instrument_dial_size
   — instrument_range_low_value
   — instrument_range_high_value
   — instrument_red_hand/alarm_setting
   — instrument_nameplate_inscription
   — instrument_low_value_alarm_setting
   — instrument_high_value_alarm_setting

f) For an HVAC turn/elbow occurrence, retrieve and list its:
   — turn_angle
   — pecific_hvac_turn/elbow_type
   — number_of_splitters
   — radius
   — aspect_ratio
   — splitter_radius

g) For an hvac_passive_air_filter_occurrence, retrieve and list its:
   — hvac_filter_housing_number
   — design_pressure_loss_clean
   — design_pressure_loss_dirty
   — filter_gauge_type (e.g. “II”)
   — filter_gauge_maximum_pressure(e.g. 15 in. WG)
   — hvac_filter_type(e.g. “CBR”)
   — hvac_size(e.g. 15AF)

6.3.5 TG-5: network connectivity

6.3.5.1 part connectivity

Test Purposes: The purpose of this test is to demonstrate the ability of the translator to process a connected set of Engineering Parts and to verify their compatibility.

a) For the HVAC system identified in section 6.3.1 (a), retrieve its first/next engineering part occurrence.

b) For this engineering part occurrence retrieve its first/next HVAC port occurrence

c) For the HVAC port occurrence in (b), retrieve its HVAC interface occurrence.

— c.1) If the HVAC port occurrence has no HVAC interface occurrence, list the hvac_port_occurrence_ID, its specific_hvac_port_type, and the message, “free”.

— c.2) If the HVAC interface occurrence in (c) is not of type HVAC joint occurrence, return to (b).

— c.3) If all the HVAC port occurrences associated with the engineering part occurrence have been examined and none have an associated HVAC interface occurrence of type HVAC joint occurrence, print the engineering part occurrence’s engineering_part_description, engineering_part_occurrence_ID (SPIV_ID) and the message, “part has no joint connections”, and return to (a).

d) For the HVAC joint occurrence of (c.1), retrieve its other HVAC port occurrence.

e) Retrieve and list for both HVAC port occurrences at the HVAC joint occurrence the following:
   — specific_port_cross_section_type_name
   — hvac_port_occurrence_ID (SPIV_ID)

f) For the HVAC port occurrence of (d), retrieve its engineering part occurrence.

g) Using the engineering part occurrence from (f), continue with step (b) unless all engineering part occurrences in the HVAC system occurrence from (a) have been traversed.

6.3.5.2 HVAC section connectivity

Test purposes: The purpose of this test is to demonstrate the ability of the translator to process a connected set of HVAC sections and engineering parts and to verify their compatibility.

a) For the HVAC system identified in section 6.3.1 (a), retrieve its first/next HVAC interconnection occurrence that is an HVAC section occurrence.

b) For this HVAC section occurrence, retrieve its first/next HVAC port occurrence.

c) For the HVAC port occurrence in (b) retrieve its HVAC interface occurrence

— c.1) If the HVAC port occurrence has no HVAC interface occurrence, list the hvac_port_occur-rence_ID and the message, “free end of HVAC section”.

— c.2) If the HVAC interface occurrence in (c) has a type HVAC interconnection interface occurrence, proceed to (d). If the HVAC interface has no type HVAC interconnection interface occurrence but does have a type HVAC joint occurrence, proceed to (g). If the HVAC interface occurrence in (c) has only a type HVAC system interface occurrence, list the hvac_interface_occurrence_ID and the message “Terminating connectivity traversal at an HVAC System Interface” and return to (a) until all HVAC Section Occurrences have been traversed.

d) For the HVAC interface/HVAC interconnection interface occurrence of (c.2), retrieve its other HVAC port occurrence and list for both the following:
   — specific_port_cross_section_type_name
   — hvac_port_occurrence_ID (SPIV_ID)

e) For the HVAC port occurrence in (d), retrieve its HVAC interconnection occurrence.

f) Using the HVAC interconnection occurrence from (e) proceed to step (b) until all HVAC sections have been traversed.

g) For the HVAC joint occurrence from (c.2) retrieve its other HVAC port occurrence and list for both the following:
   — specific_hvac_port_type
   — specific_port_cross_section_type_name
   — cross_section_height_value
   — cross_section_width_value
   — cross_section_corner_radius_value

h) For the HVAC port occurrence in (g) retrieve its engineering part occurrence.

i) For the engineering part occurrence from (h) retrieve its next HVAC port occurrence. If all have been processed for this engineering part occurrence, print the message “No more paths from engineering part”, and stop.

j) For the HVAC port occurrence from (i), retrieve its HVAC interface occurrence.

— j.1) If the HVAC interface occurrence is of type HVAC system interface occurrence, list the hvac_port_occurrence_ID from (i), the hvac_interface_occurrence_ID from (j) and the message, “HVAC system interface”, and return to (i).

— j.2) If the HVAC interface occurrence is type HVAC interconnection interface occurrence, go to step (d).

— j.3) If the HVAC Interface Occurrence is only of type HVAC Joint Occurrence, go to step (g).

6.3.6 TG-6: attachments

Test purposes: The purpose of this test is to demonstrate the ability of the translator to process the structure and data elements associated with an attachment entity.

a) For the HVAC system identified in section 6.3.1 (a), retrieve an (other) engineering part occurrence playing the role “implements” with an attached_penetrating_object and retrieve its attachment_end_occurrence via the role “attached_via”.

b) For the attachment end occurrence in (a) retrieve its attachment occurrence, its other attachment end occurrence and the entity to which that end is associated.

c) If the entity from (b) is not a type of attaching part occurrence, return to (a).

d) If the attaching part is not of type HVAC support, return to (a).

e) For the attachment occurrence in (a), list the following:
   — its associated attached/penetrating_object_ID (SPIV_ID of the HVAC item)
   — hvac_support_ID (SPIV_ID)
   — its attachment_configuration_dimensionality
   — its attachment_configuration_function

6.3.7 TG-7: insulation

Test purposes: The purpose of this test is to demonstrate the ability of the translator to process the structure and data elements associated with the insulation of an engineering part.

a) For the HVAC system identified in section 6.3.1 (a), retrieve[2] an engineering part occurrence (an HVAC part occurrence) playing the role “implements” with an attached_penetrating_object and retrieve its attachment_end_occurrence via the role “attached_via”.

b) For the attachment occurrence from (a) retrieve its opposite attachment end occurrence and its associated attaching/penetrated object.

c) If the attaching/penetrated object is not of type insulation part occurrence, return to (a).

d) For the HVAC part occurrence from (a), retrieve its required_thermal_insulation_specification_ID. If this value is null, return to (a).

e) For the insulation part occurrence of (c), retrieve its specific_insulation_part_ID (SPIV_ID) and its total_part_insulation_thickness.

f) For the HVAC part occurrence from (a);

— f.1) If it has a non-null USED_TO_DERIVE_GEOMETRY_OF role with part_envelope_occurrence_shape_representation, print the message, “occurrence-defined insulation geometry” and proceed to (a) to find a fixed geometry-type object unless one has already been found. If so, terminate the test.

— f.2) If it has a non-null IS_OCCURRENCE_OF role with specific engineering part, proceed to (g).

g) Retrieve the specific engineering part of the engineering part occurrence from (a)

---

[2]. (via SPIV_relationship which HAS_CONTEXT_OF the HVAC_system_occurrence, where SPIV_relationship_type := 'design_product_structure', and which HAS_COMPONENT_OF SPIV's of type engineering_part_occurrence\HVAC_part_occurrence.)

h) Retrieve the specific part envelope shape representation of the specific engineering part from (g).

— h.1) if the specific part envelope shape representation from (g) is not of type insulation envelope and all specific part envelope shape representations for this part have been examined, print the message; “fixed geometry object part requiring insulation has no insulation envelope.” and return to try another part at (a).

— h.2) If the specific part envelope shape representation is of type insulation envelope, print its ID and the message, “fixed-geometry insulation envelope.”

6.3.8 TG-8: HVAC paths

Test purposes: The purpose of this test is to demonstrate the ability of the translator to process the path geometry information associated with HVAC part occurrences and HVAC sections.

a) For the HVAC system identified in Section 6.3.1 (a), retrieve its first/next HVAC interconnection occurrence and its type (i.e. HVAC section). If all HVAC interconnections have been processed, proceed to (e).

b) For the HVAC interconnection occurrence retrieve its first/next path arc from its supertype distribution interconnection occurrence.

— b.1) If the HVAC interconnection occurrence has no path arc, print its hvac_interconnection_id and the message, “missing path arc”, and return to (a).

— b.2) If all path arcs for this HVAC interconnection occurrence have been processed, return to (a).

c) For the path arc from (b) retrieve its beginning and ending path_node_IDs.

— c.1) If the path_node_IDs are identical, print the path_arc_ID, the path_node_ID and the message, “error: identical start and end path node for path arc”, and return to (b).

d) For the path arc from (b) retrieve and print the following and return to (b):
   — hvac_interconnection_ID
   — hvac_interconnection_type (note: should be HVAC section)
   — path_arc_ID
   — path_arc_type_value
   — path_arc_shape_representation ID
   — path_arc_shape_representation shape_representation_style
   — start path_node_ID
   — end path_node_ID

e) For the same HVAC system occurrence, retrieve its first/next HVAC part occurrence. If all HVAC part occurrences have been processed, stop.

f) For the HVAC part occurrence from (e) retrieve its first/next path arc from its supertype distribution part occurrence.

— f.1) If it has none, print the hvac_part_occurrence_ID and the message, “HVAC part occurrence missing path arc” and return to (e)

— f.2) If all have been processed return to (e).

g) For the path arc from (f) retrieve its beginning and ending path_node_IDs

— g.1) If the path_node_IDs are identical, print the path_arc_ID, the path_node_ID and the message, “error: identical start and end path node for path arc”, and return to (f).

h) For the path arc from (f) retrieve and print the following and return to (f):
   — hvac_part_ID
   — path_arc_ID
   — path_arc_type_value
   — path_arc_shape_representation ID
   — path_arc_shape_representation shape_representation_style
   — start path_node_ID
   — end path_node_ID

6.3.9 TG-9: HVAC assembly

Test purposes: The purpose of this test is to demonstrate the ability of the translator to process the structure and data associated with the HVAC assembly entity.

a) For a given HVAC assembly occurrence, retrieve and list the following:
   — assembly_name
   — hvac_assembly_type
   — assembly_shop_drawing_number
   — each assembly installation instruction’s assembly_instruction_number and assembly_instruc-tion_description
   — each assembly assembly instruction’s assembly_instruction_number and assembly_instruc-tion_description
   — each assembly coating instruction’s assembly_instruction_number and assembly_instruc-tion_description
   — each assembly insulation instruction’s assembly_instruction_number and assembly_instruction_description

b) For the HVAC assembly of (a) retrieve[3] and list each of its member engineer-ing_part_occurrence_IDs.

---

[3]. (via SPIV_relationship which HAS_CONTEXT_OF the HVAC_assembly_occurrence, where SPIV_relationship_type := 'assembly_product_structure', and which HAS_COMPONENT_OF SPIV's of type engineering_part_occurrence.)

c) For the HVAC assembly in (a), retrieve and list each of its assembly_end_port_IDs.

d) For the HVAC assembly in (a), retrieve and identify for each of its HVAC fabrication parts whether it is of type macro part or explicit geometry part.

If the HVAC fabrication part is of type macro, list the following:
— its HFP_standard_shape_macro_ID
— each of its HFP_standard_shape_macro_parameters

If the HVAC fabrication part is of type explicit geometry, list the following:
— each of its hvac_fabrication_piece_IDs

6.3.10 TG-10: HVAC joint

Test purposes: The purpose of this test is to demonstrate the ability of the translator to process the structure and data associated with a HVAC joint entity.

a) For a given HVAC joint occurrence, retrieve and list its:
— hvac_joint_type
— joint_joining_specification_ID
— joint_test_requirement_ID
— joint_inspection_requirement_ID
— joint_fabrication_specification_ID
— engagement_distance_value
— sealant_type_name
— joining_type_name
— joint_tightness_name

b) For the HVAC joint occurrence of (a), retrieve its fastener_set_occurrence_ID and fastener_set_type and print these values.

c) For the fastener set occurrence from (b) retrieve its specific fastener set.

d) For the specific fastener set from (c), retrieve all fastener usages and for each print its:
— specific_fastener_ID
— fastener_quantity_value

6.3.11 TG-11: miscellaneous queries

Test purposes: The purpose of this test is to demonstrate the ability of the translator to process various queries against the data structure commonly posed in day-to-day ship product definition activities.

a) Retrieve all equipment occurrences with non-NULL equipment_input_power_at_rated_codition attributes. For each, list their equipment_description followed by each of their equipment_power's power_values and related power_types.

b) Retrieve all equipment occurrences with non-NULL equipment_fixed_mount_type and list their equipment_description.

c) Retrieve all equipment occurrences with a given equipment_location_description and list their equipment_description.

d) Retrieve all duct heaters and for each steam heater list its:
   — hvac_size
   — hvac_type
   — humidistat_required
   — duct_heater_use
   — design_heating_medium_flow_rate

while for each electrical heater, list its:
   — power_output_required
   — equipment_output_power_actual
   — heater_maximum_capacity

e) Retrieve all indicator_alarms and for each list its:
   — instrument_type
   — instrument_measured_parameter
   — instrument_range_low_value
   — instrument_range_high_value
   — instrument_red_hand/alarm_setting
   — instrument_nameplate_inscription

6.3.12 TG-12: catalog external reference

Test purposes: The purpose of this test is to demonstrate the ability of the translator to process references from an exchange data set to an external catalog containing specific level data describing engineering parts.

a) For an engineering part occurrence in an exchange data set whose reference_definition_status is “internal”, access its specific engineering part having a reference_definition_status of “external”.

b) For the specific engineering part from a) retrieve (via its ship product item version/external SPIV) its n_external_defined_item and its:
   — externally_defined_item_shape_definition_type
   — externally_defined_item_reference_type
   — externally_defined_item name
   — externally_defined_item external_source name

c) If the externally_defined_item_reference_type is “library", access the catalog named in external_source.name with the identifier/key given in externally_defined_item.name and retrieve the information for the corresponding specific engineering part.

d) For the specific engineering part definition retrieved from c), print the applicable data describing that part as listed in TG-4.

Annex A

(normative)

Annex B

(normative)

Annex C

(normative)

Annex D

(normative)

Annex E

(informative)

These figures contain models of activities in the "$IDEF_0$" format wherein each activity is represented as a box having inputs, outputs, controls, and mechanisms used in performing the activity. The shaded activity boxes indicate that they are further decomposed in subsequent figures.

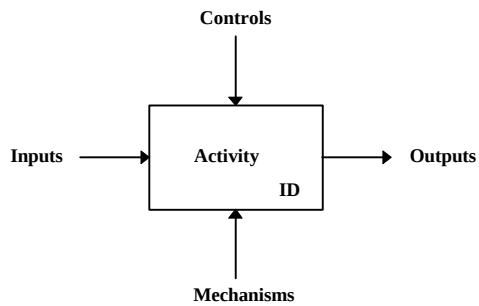

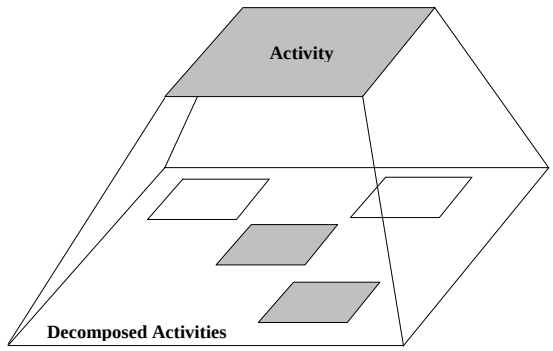

$IDEF_0$ activity model features

Application activity model

The application activity model (AAM) is provided to aid in understanding the scope and information requirements defined in this application protocol. The model is presented as a set of definitions of the activities and the data and a set of activity figures. The AAM covers activities which go beyond the scope of this application protocol.

The viewpoint of the application activity model is that of an observer of the global ship development process. It captures the processes applied throughout the life cycle of a ship, with particular emphasis on the life cycle activities pertaining to the ship's piping systems.

E.1 Application activity model definitions and abbreviations

E.2 Application activity model figures

The application activity model is given in figures E.1 through E.10. The graphical form of the application activity model is presented in $IDEF_0$ activity modelling format. Activities and data flows out of scope are marked with an asterisk.

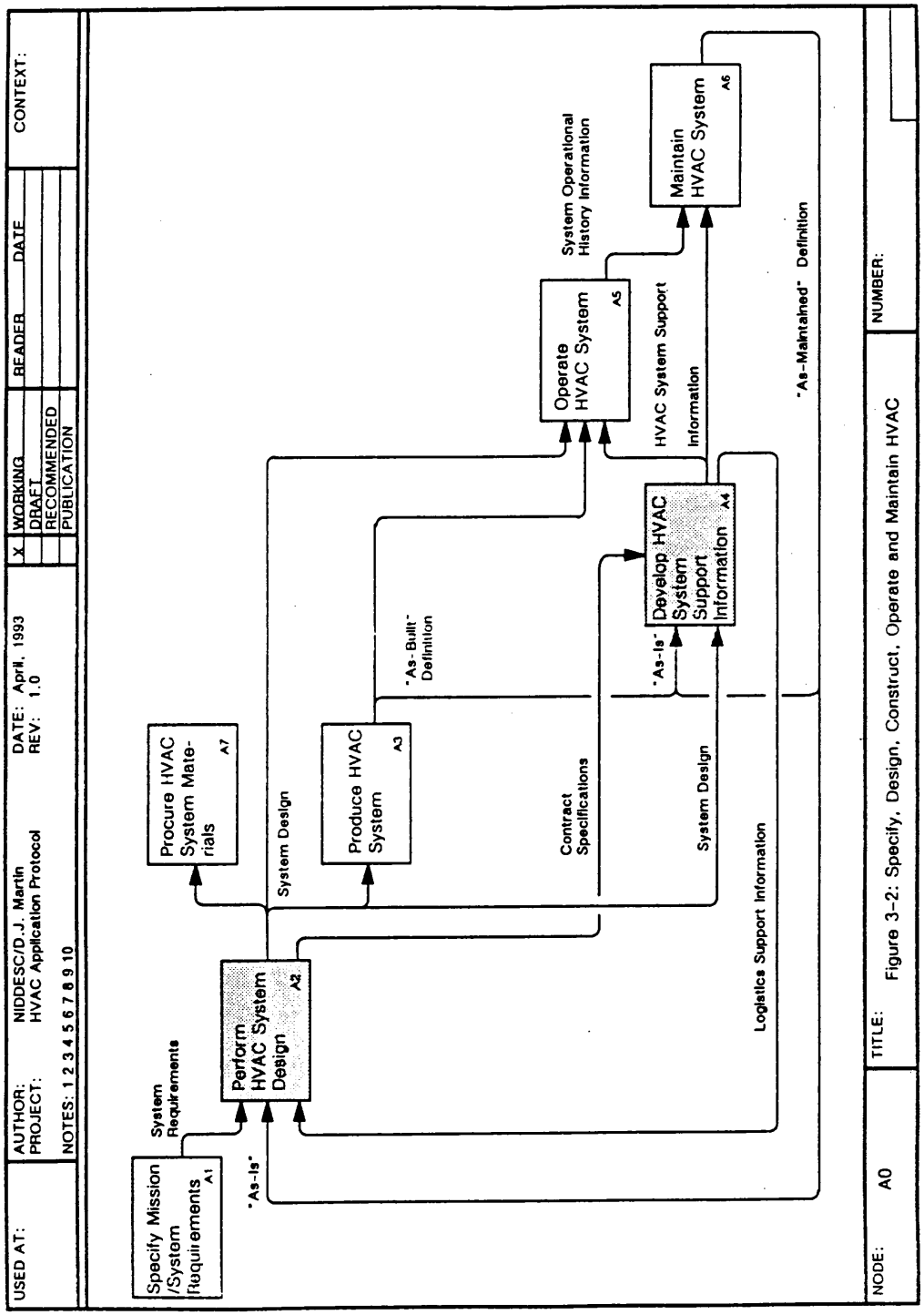

Figure E. 1 Specify, Design, Construct, Operate and Maintain HVAC

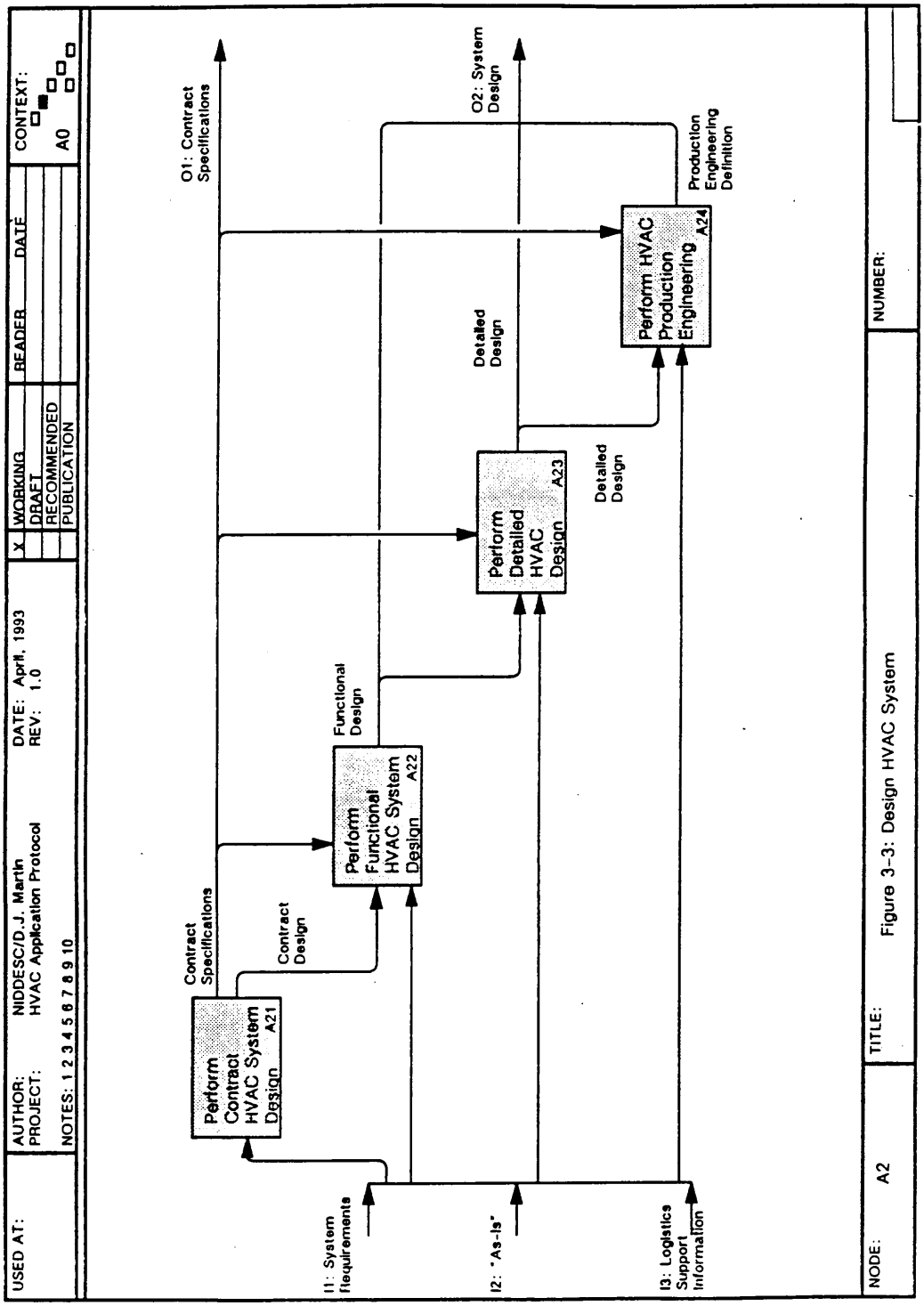

Figure E. 2 Design HVAC System

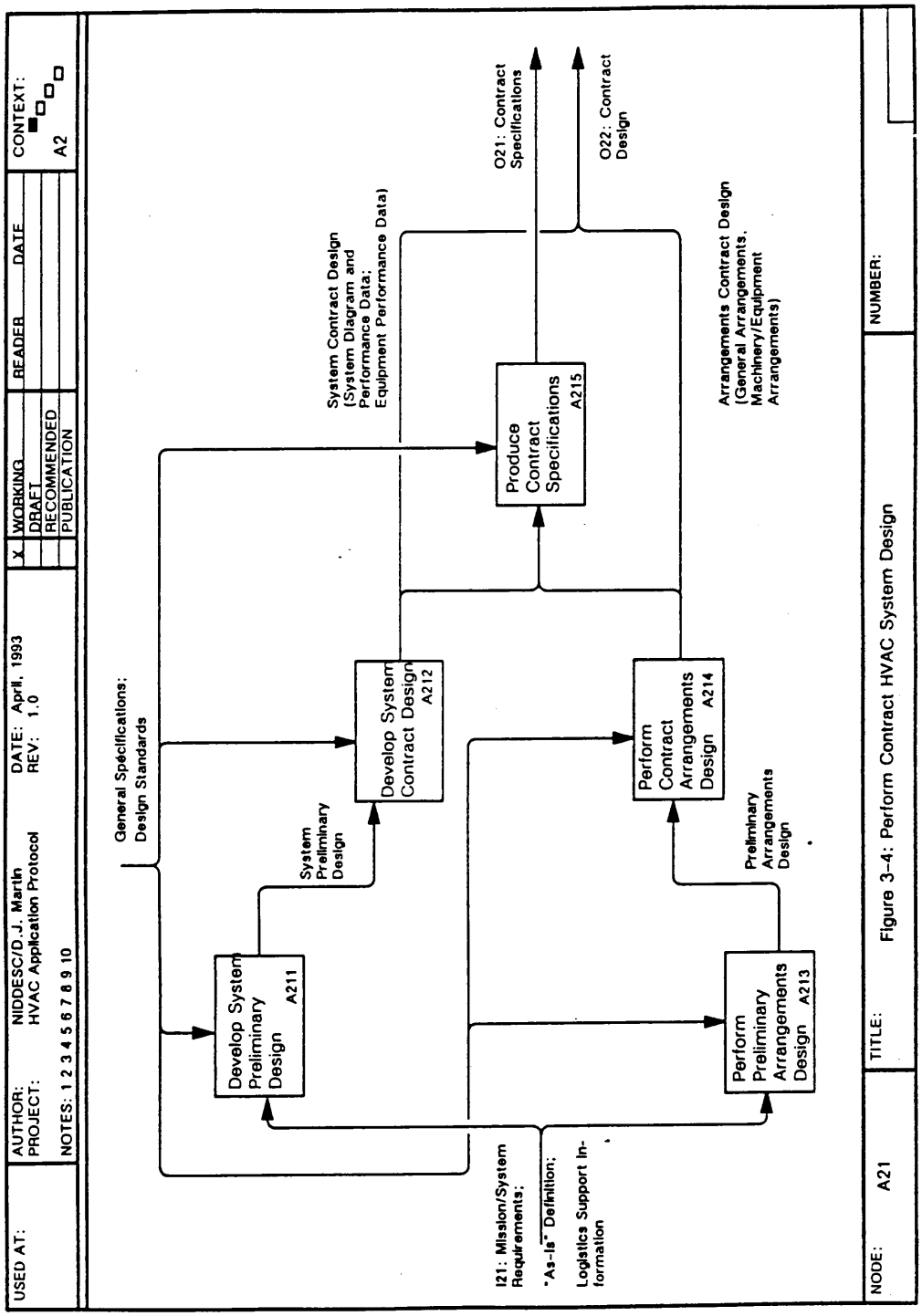

Figure E. 3 Perform Contract HVAC System Design

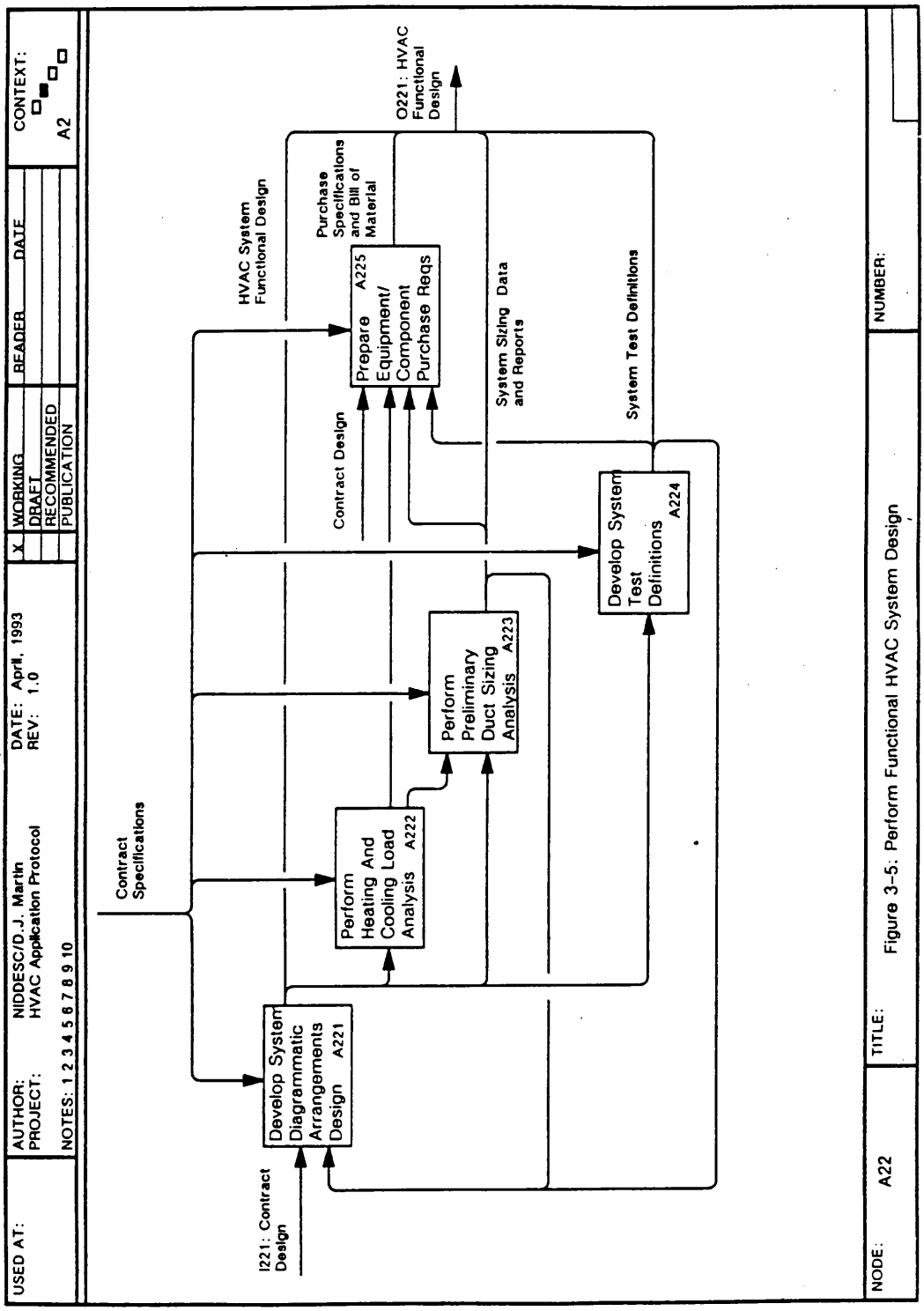

Figure E. 4 Perform Functional HVAC System Design

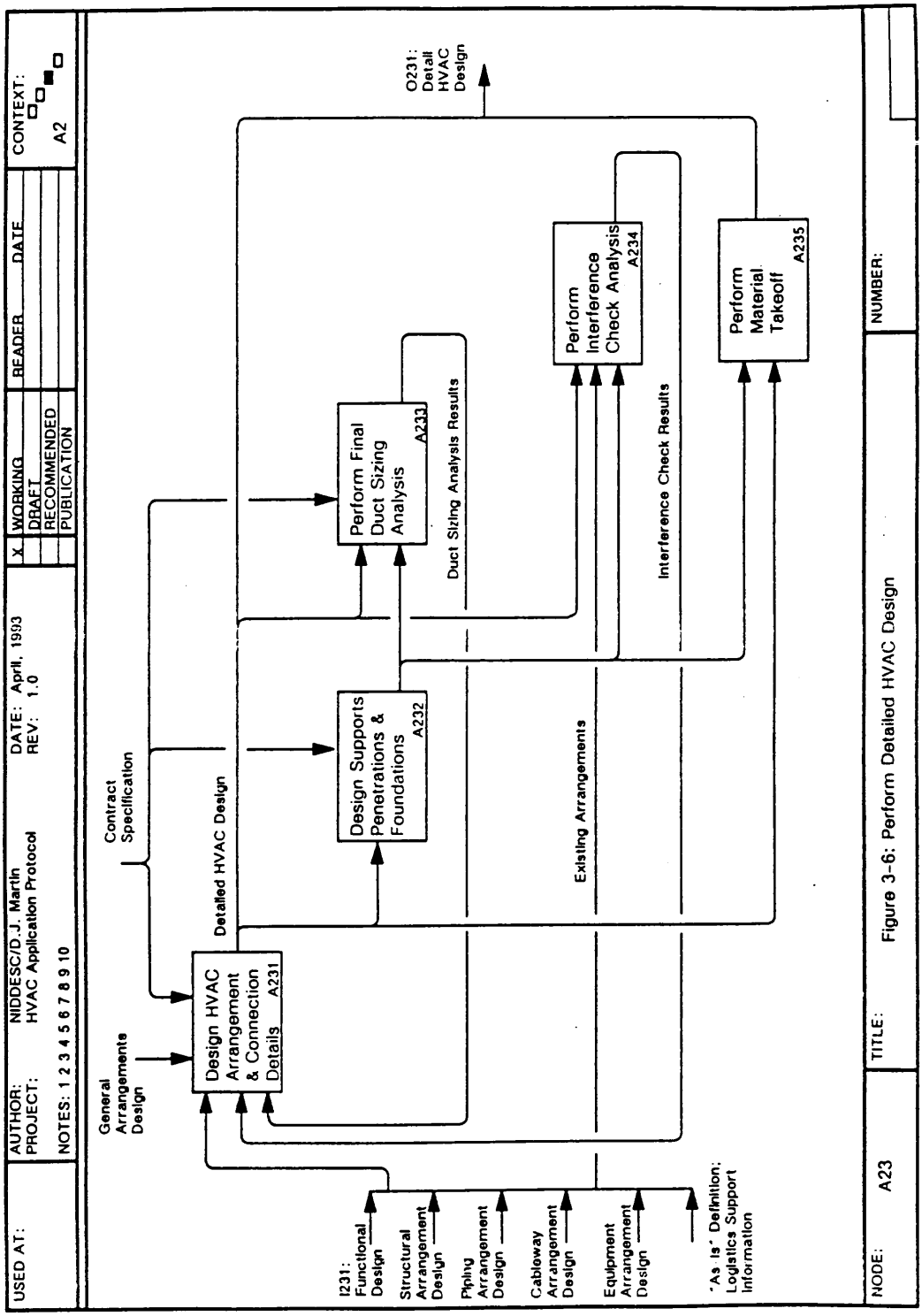

Figure E. 5 Perform Detailed HVAC Design

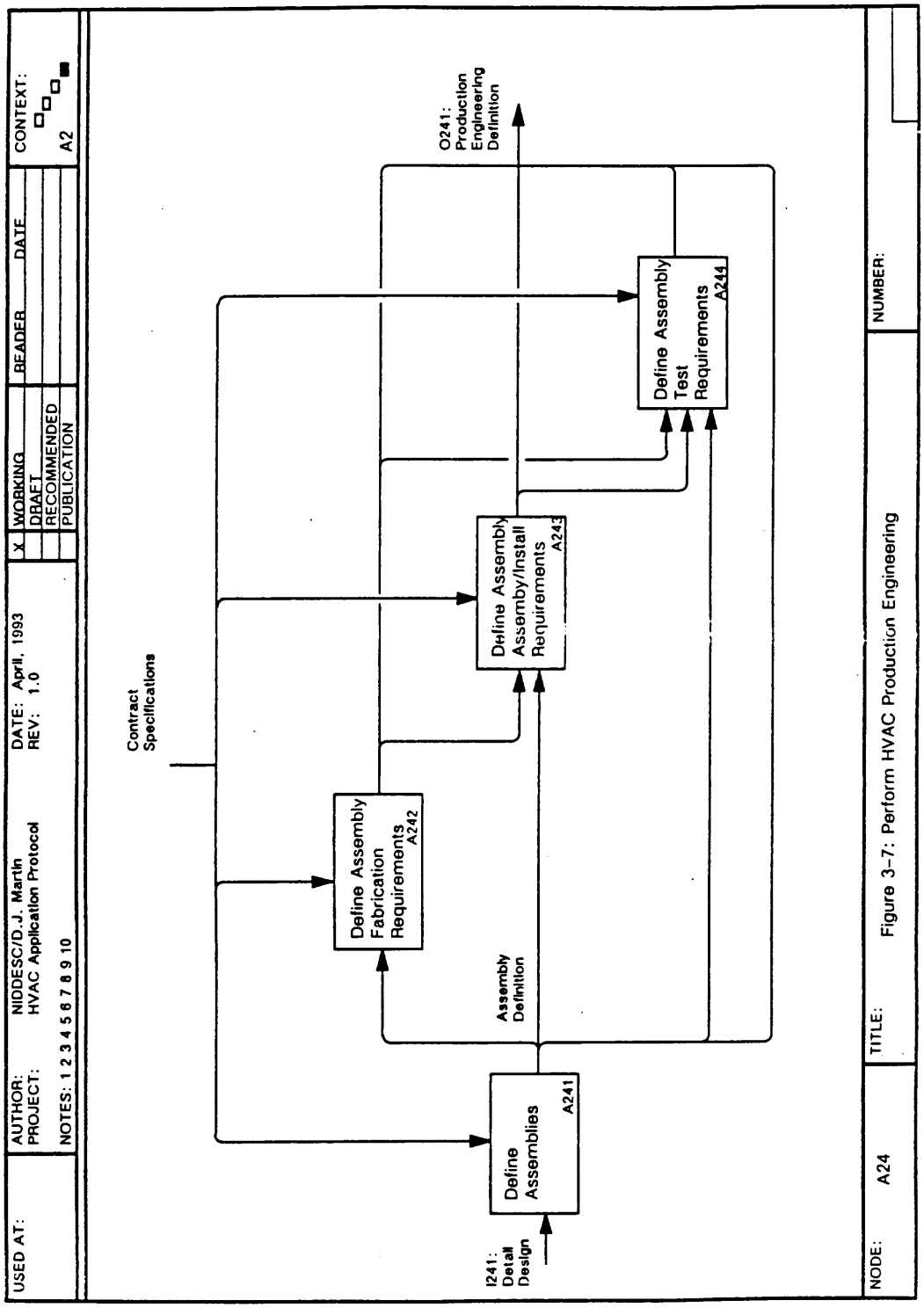

Figure E. 6 Perform HVAC Production Engineering

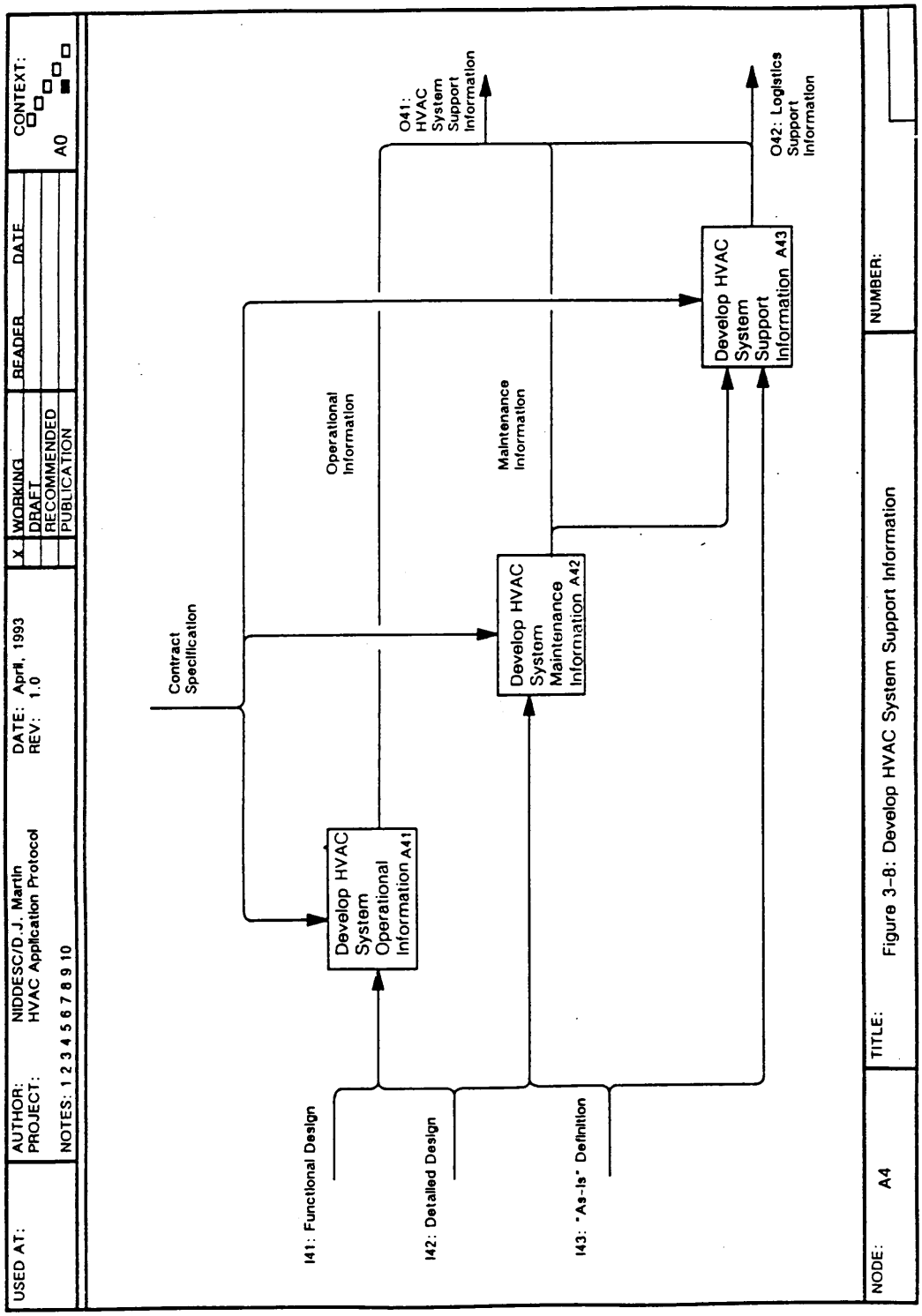

Figure E. 7 Develop HVAC System Support Information

Annex F

(informative)

Application reference model

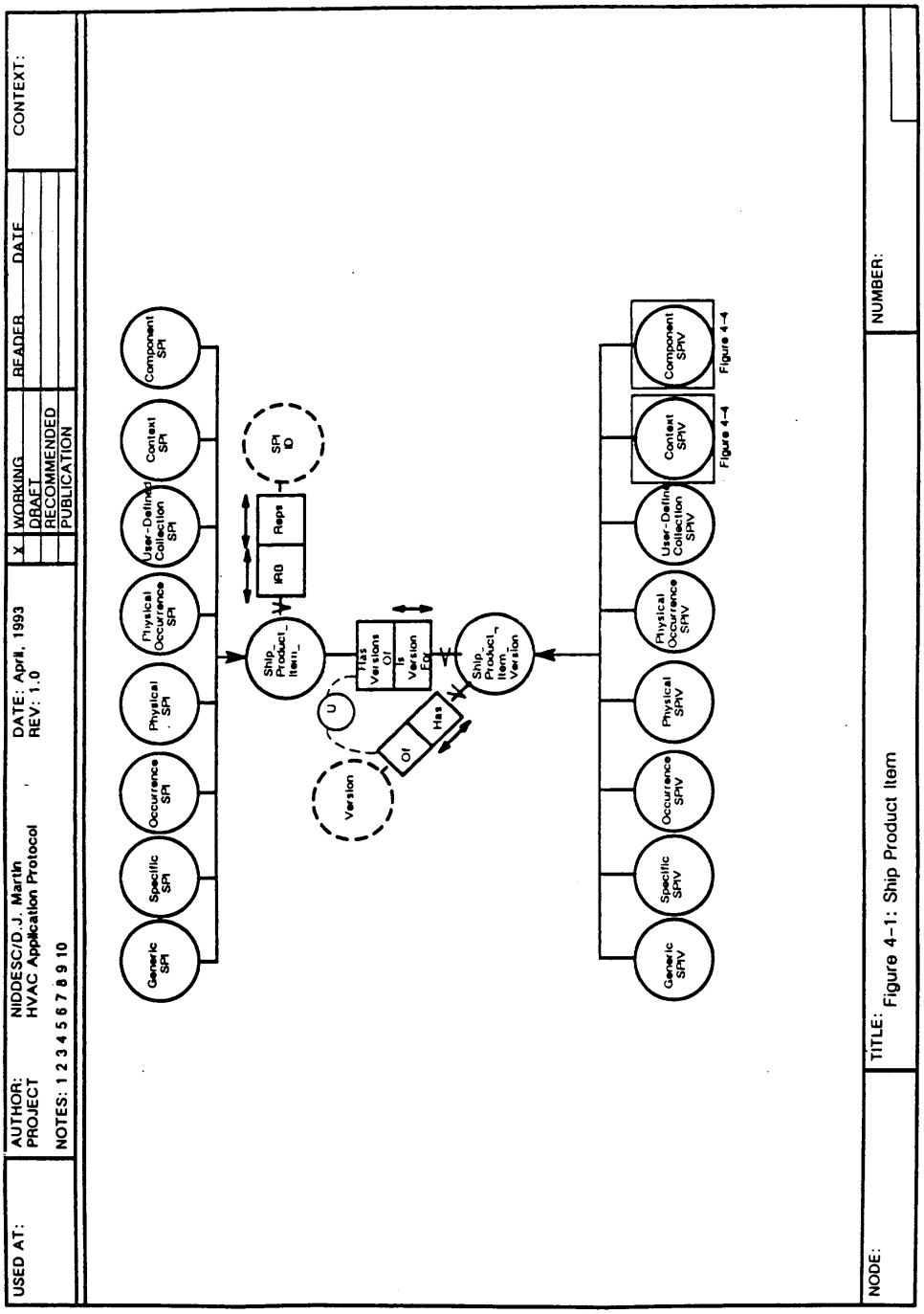

Figure F. 1 Ship Product Item

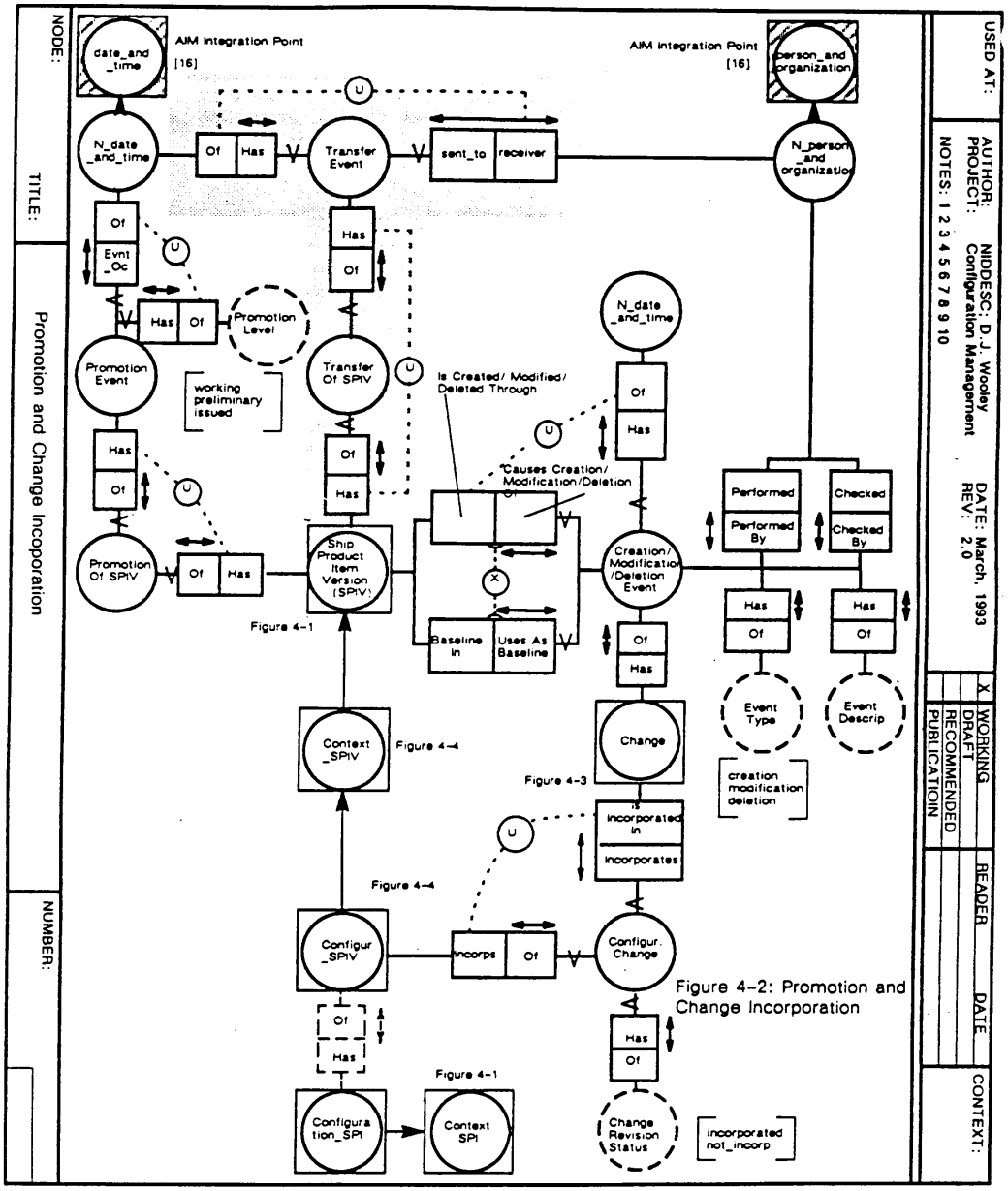

Figure 4-2: Promotion and Change Incorporation

Figure F. 2 Promotion and Change Incorporation

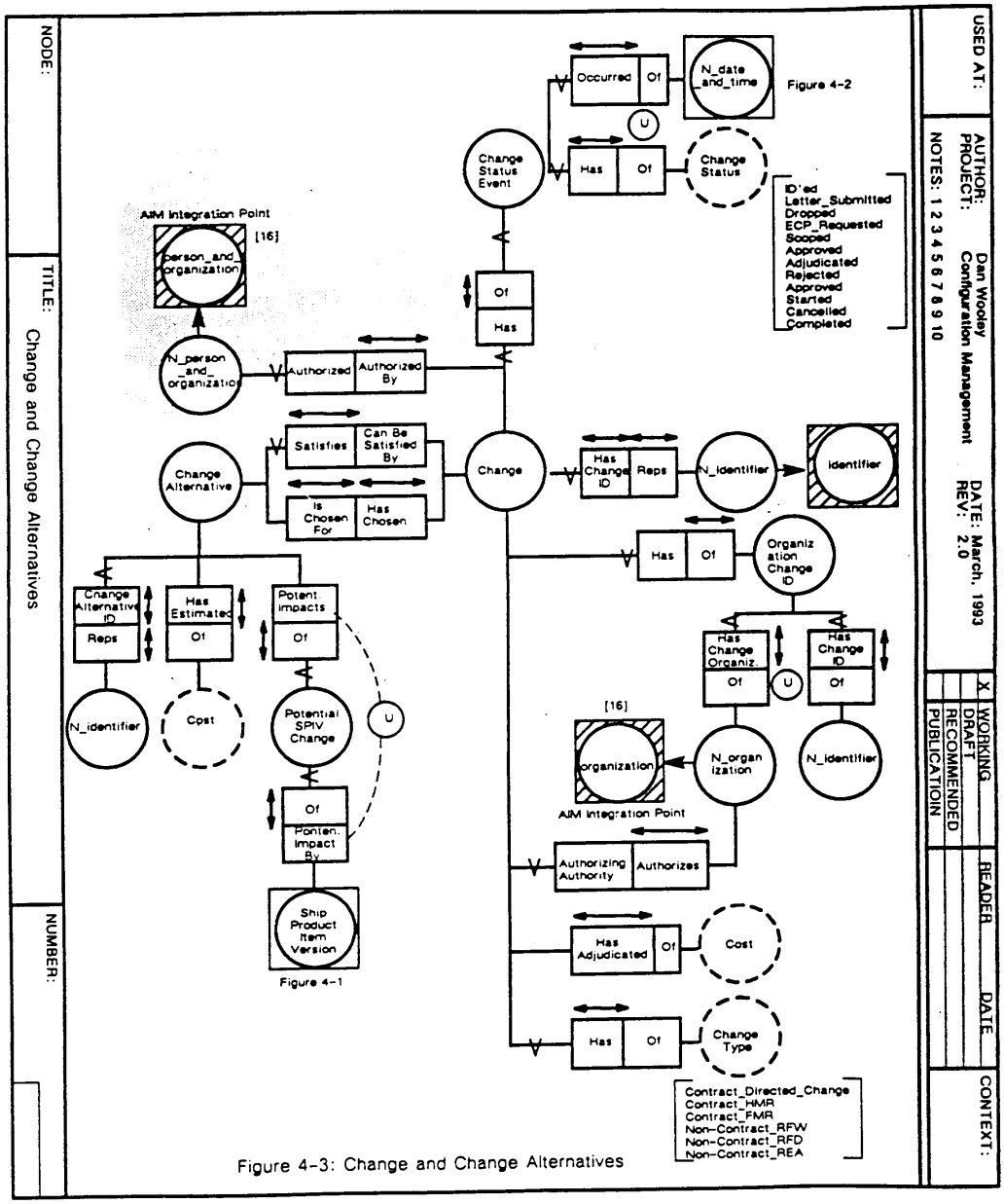

Figure F. 3 Change and Change Alternatives

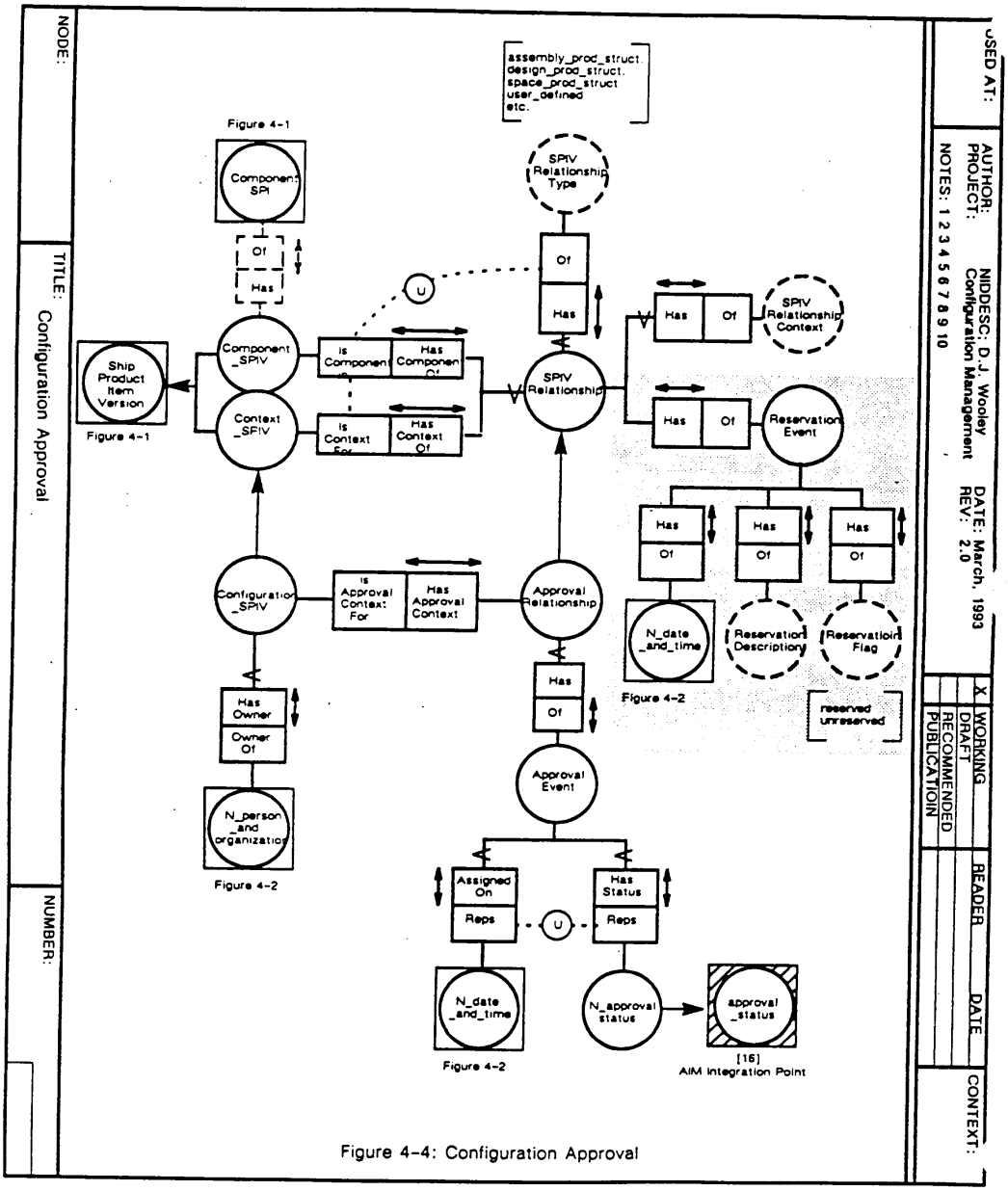

Figure F. 4 Configuration Approva

l

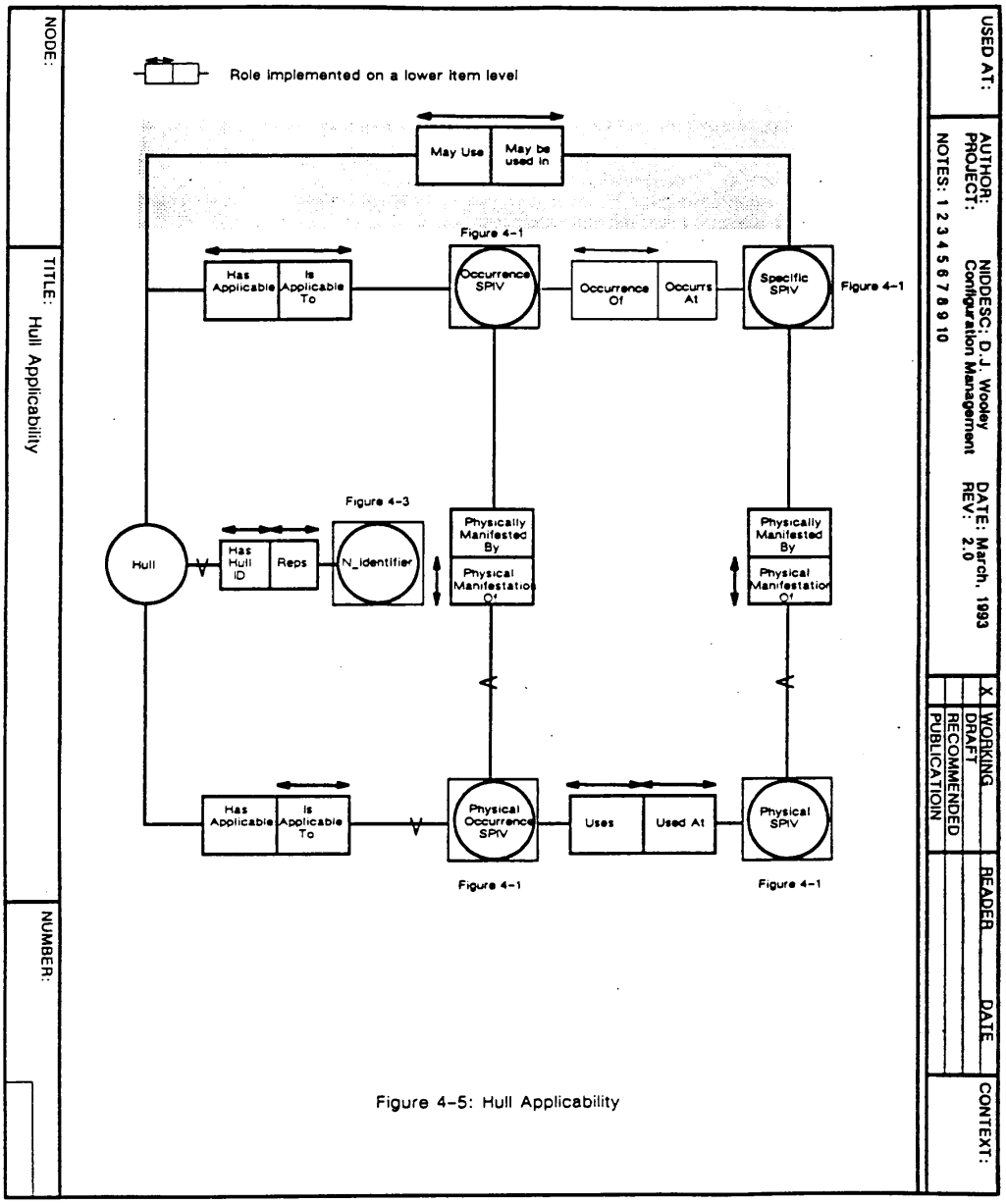

4 - 17

Figure F. 5 Hull Applicability

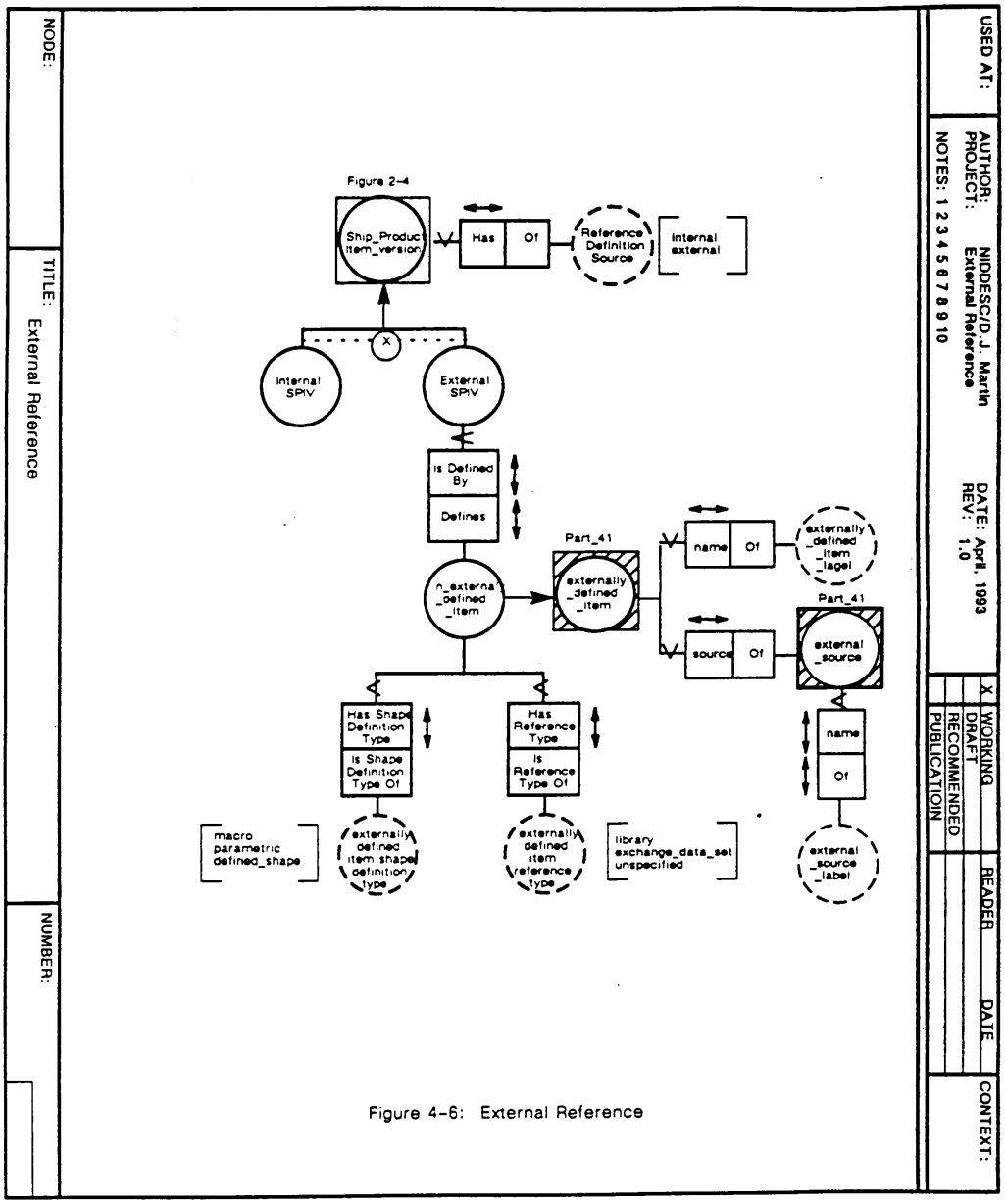

Figure F. 6 External References

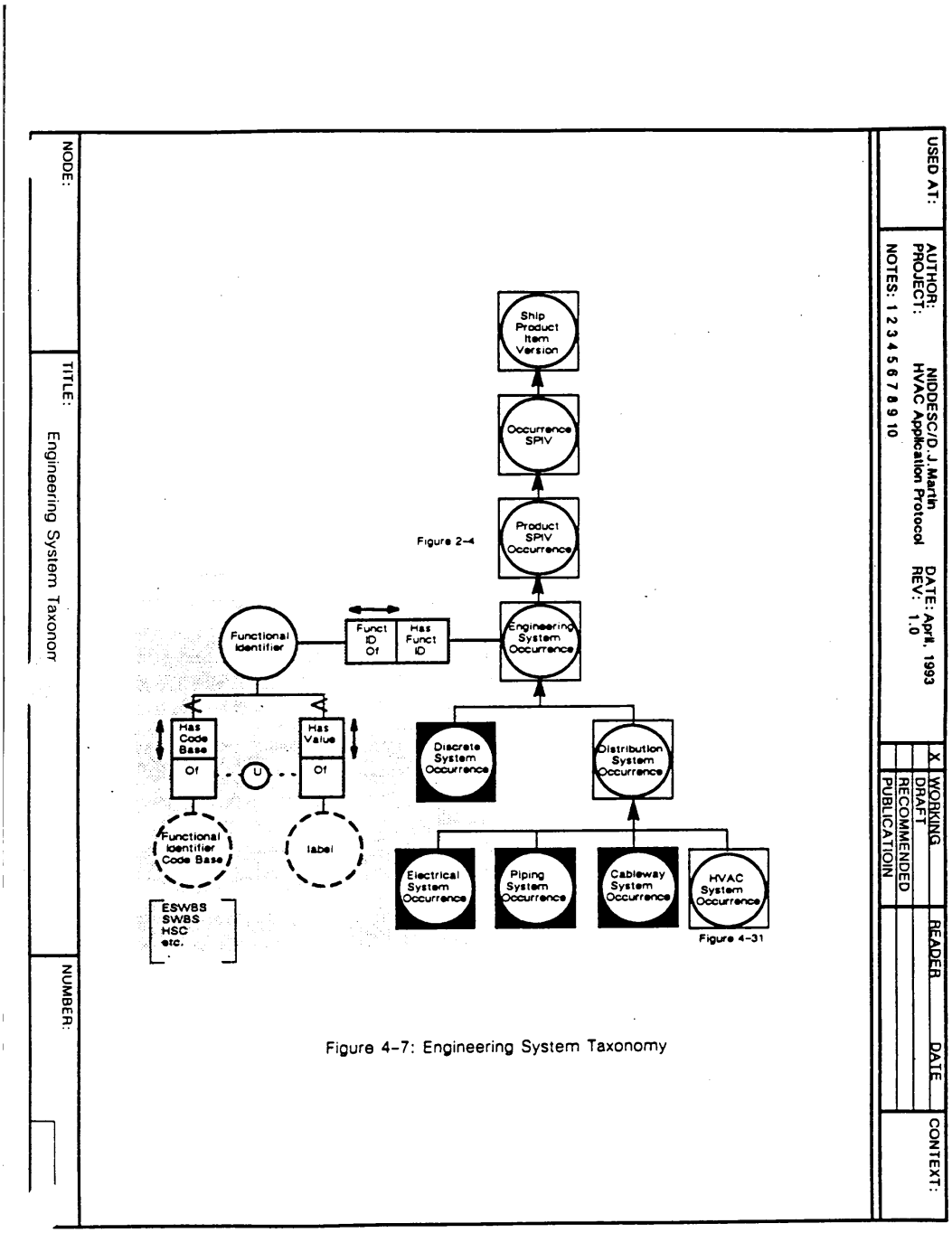

Figure F. 7 Engineering System Taxonomy

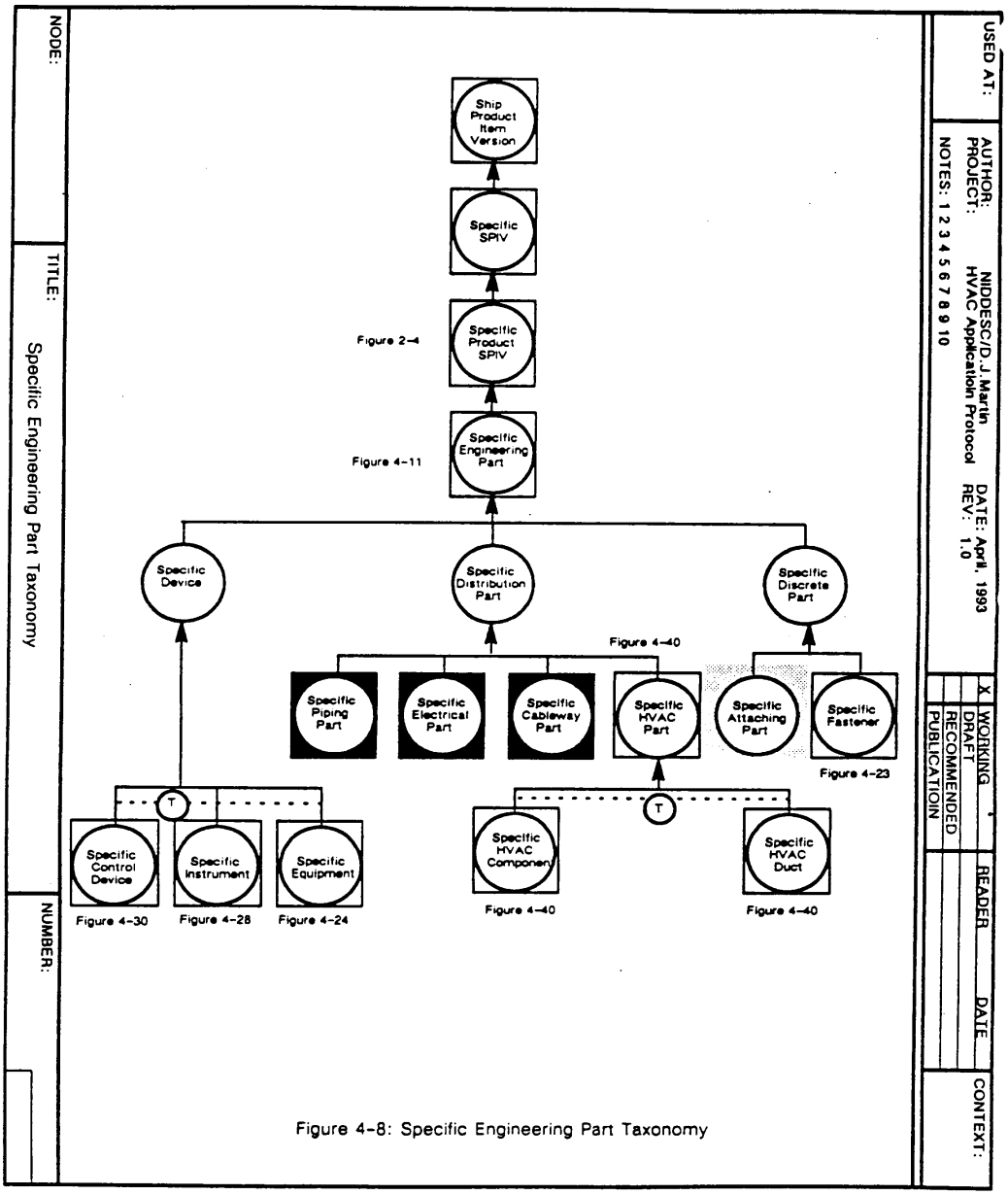

Figure F. 8 Specific Engineering Part Taxonomy

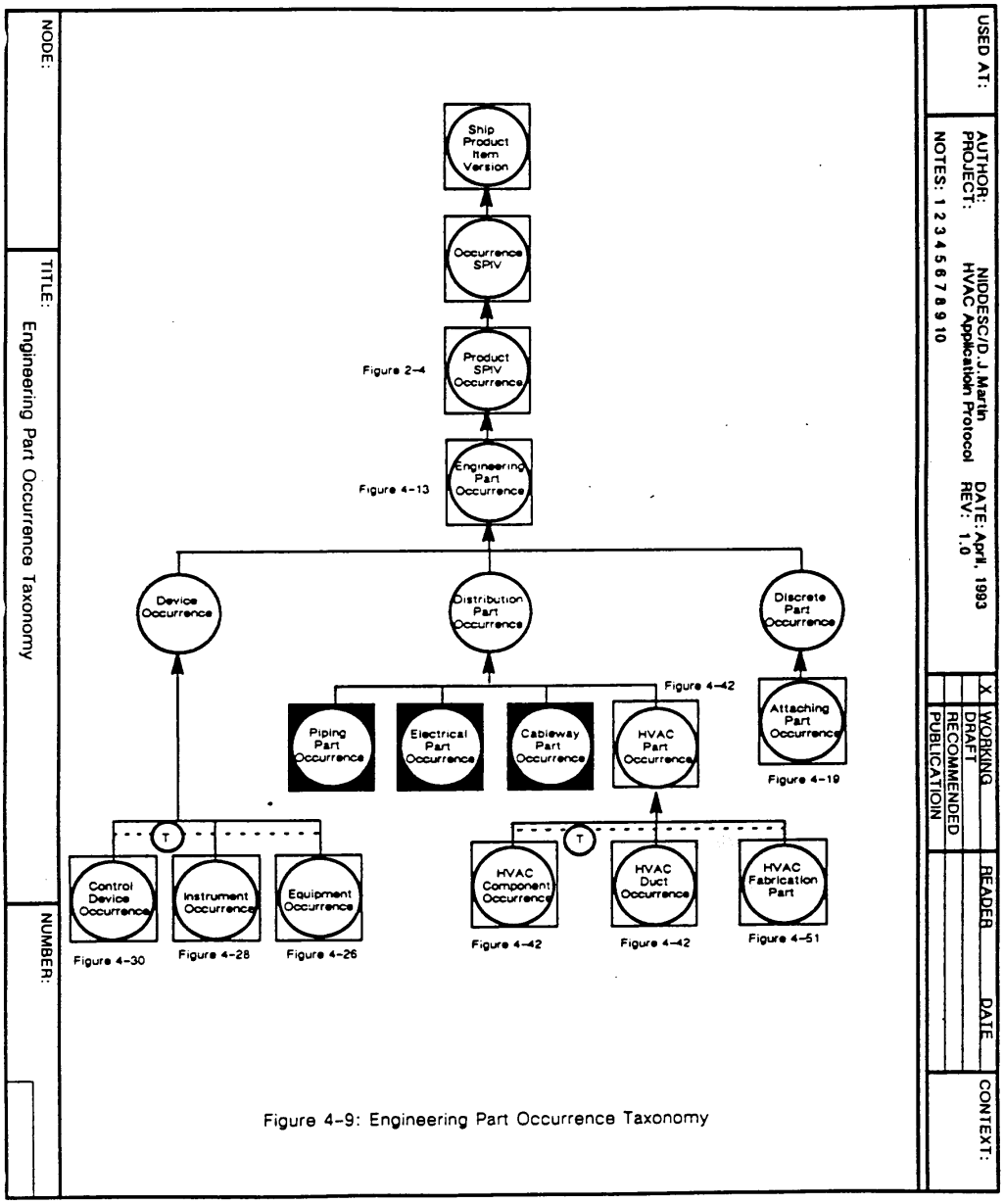

Figure F. 9 Engineering Part Occurrence Taxonomy

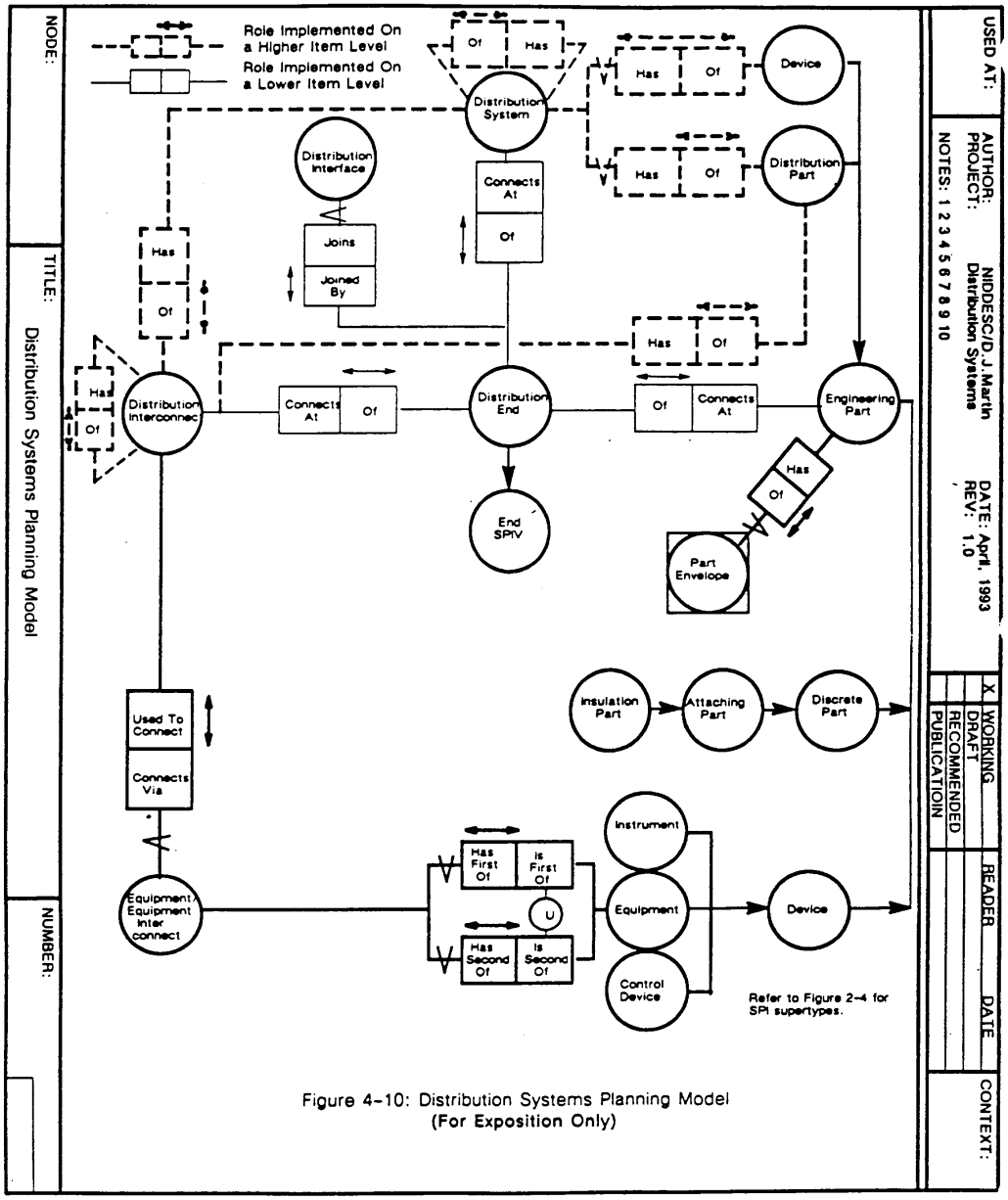

Figure 4-10: Distribution Systems Planning Model
(For Exposition Only)

Figure F. 10 Distribution Systems Planning Model

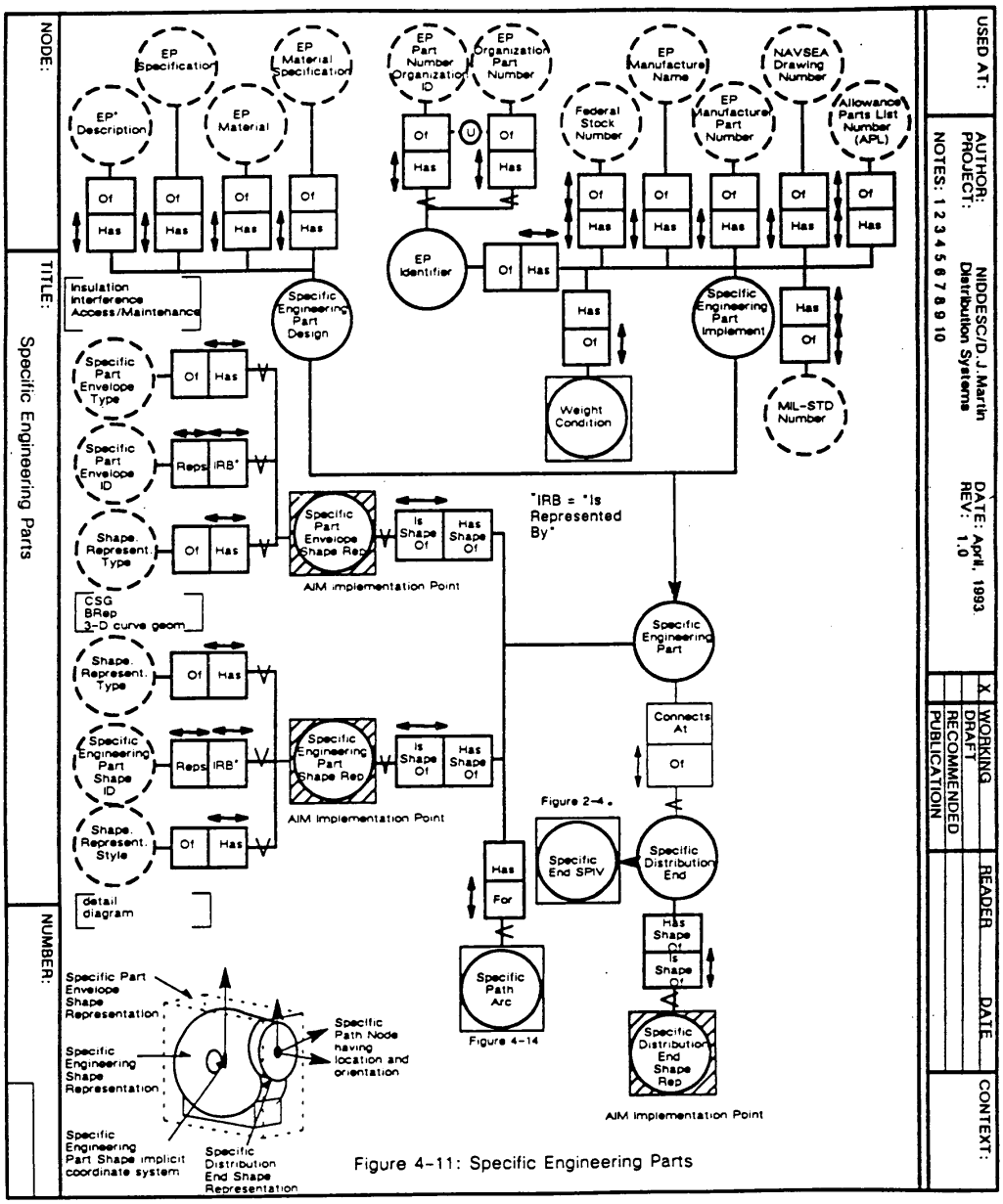

Figure F. 11 Specific Engineering Parts

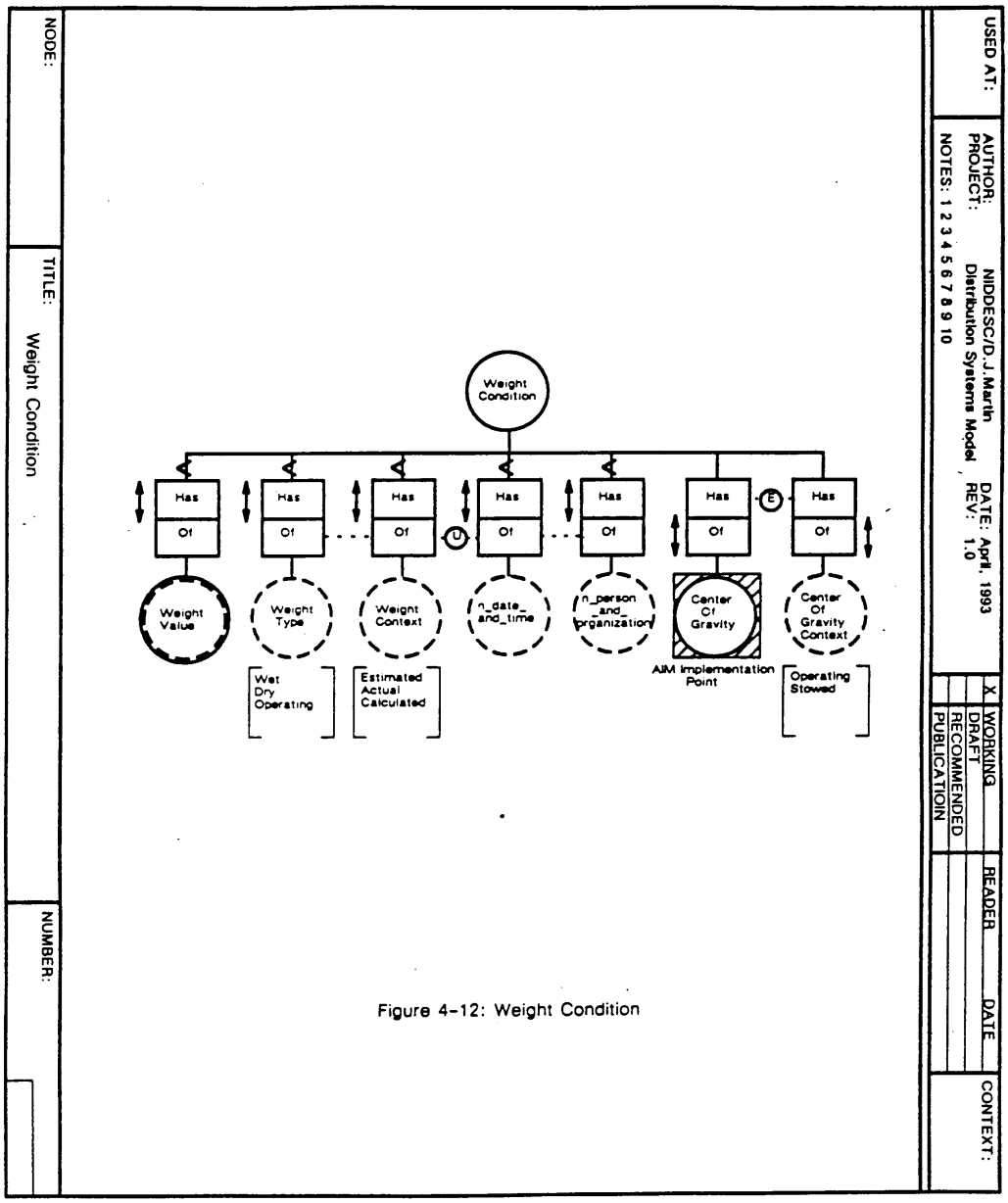

Figure 4-12: Weight Condition

Figure F. 12 Weight Condition

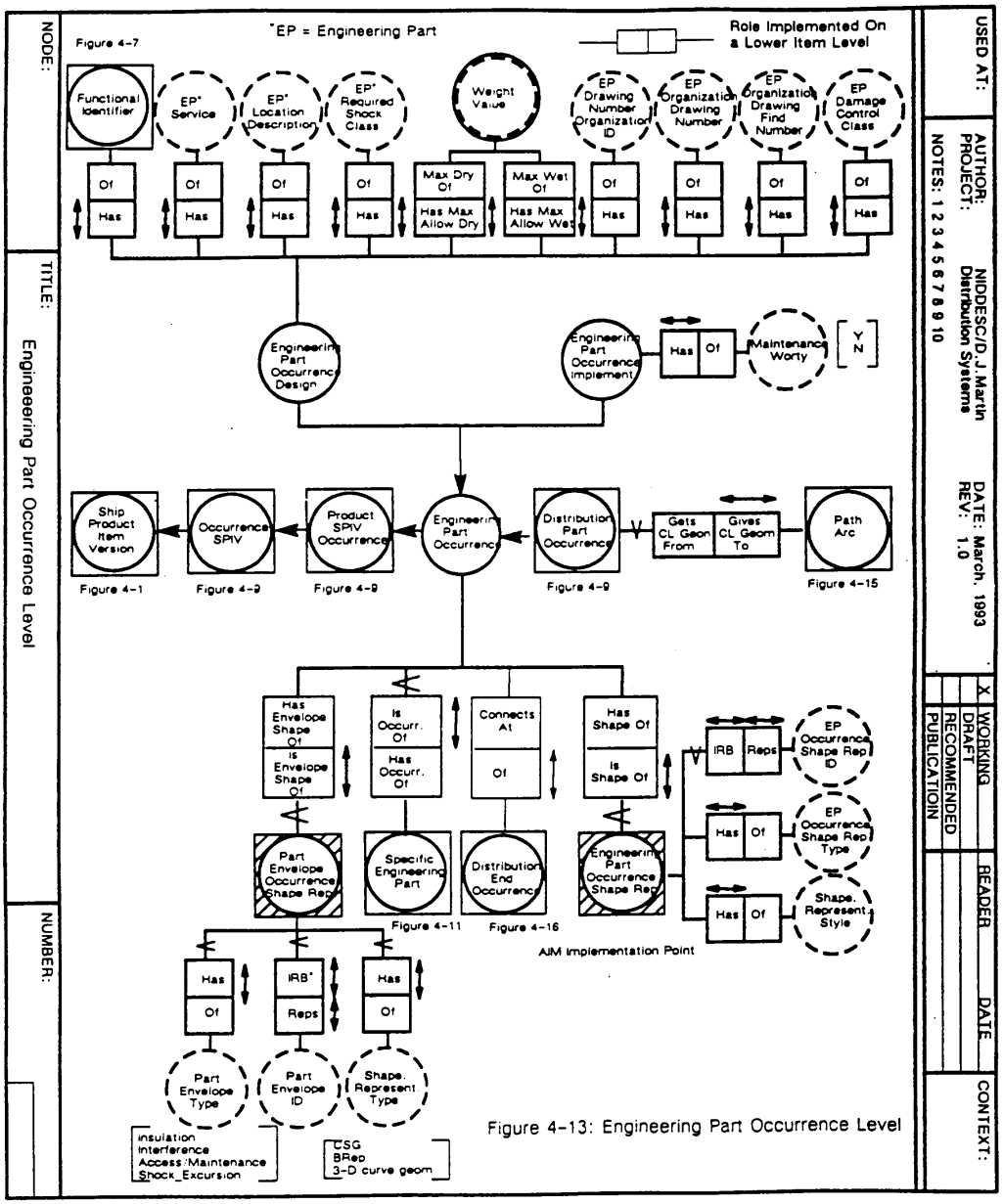

Figure F. 13 Engineering Part Occurrence Level

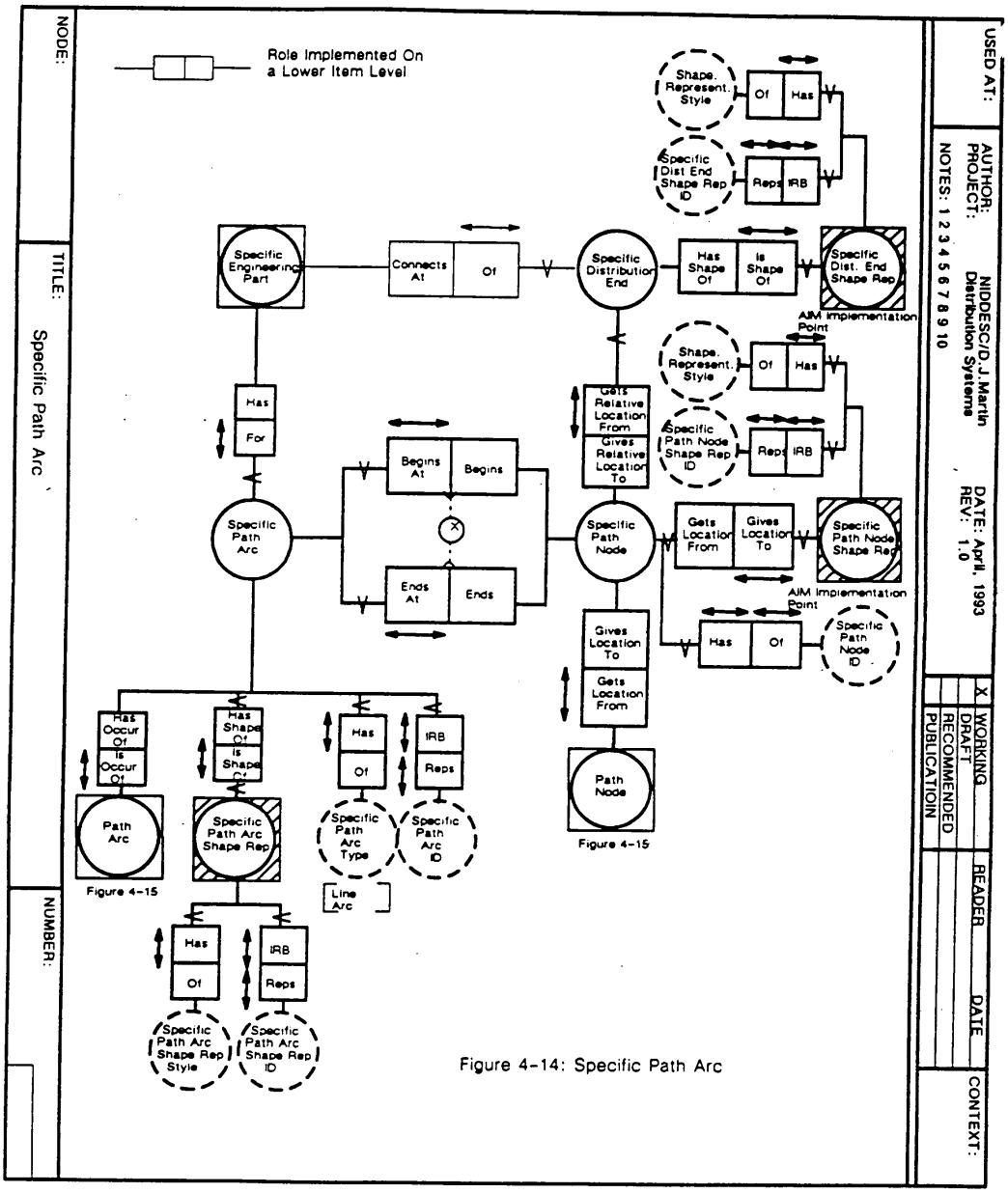

Figure F. 14 Specific Path Arc

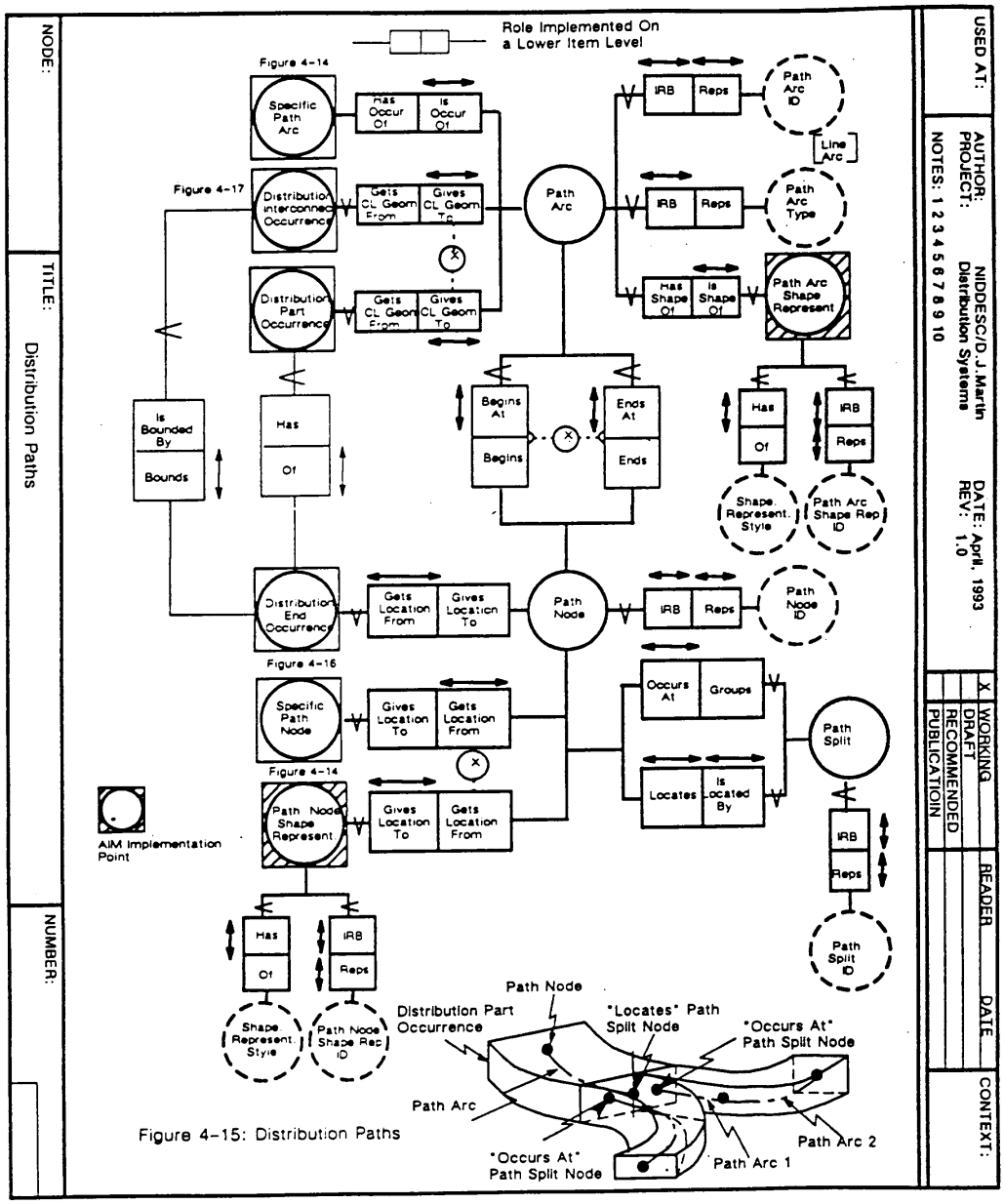

Figure F. 15 Distribution Paths

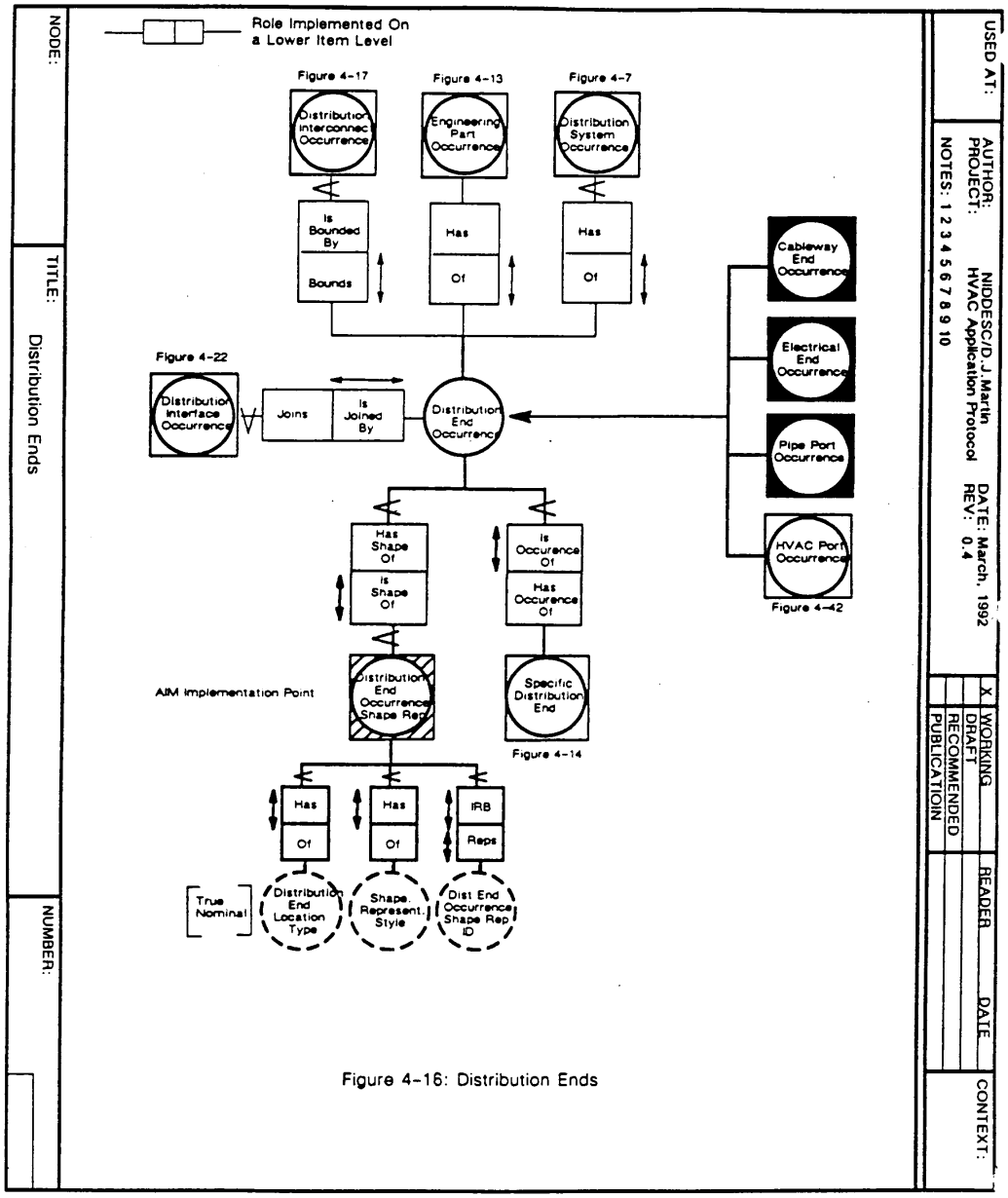

Figure 4-16: Distribution Ends

Figure F. 16 Distribution Ends

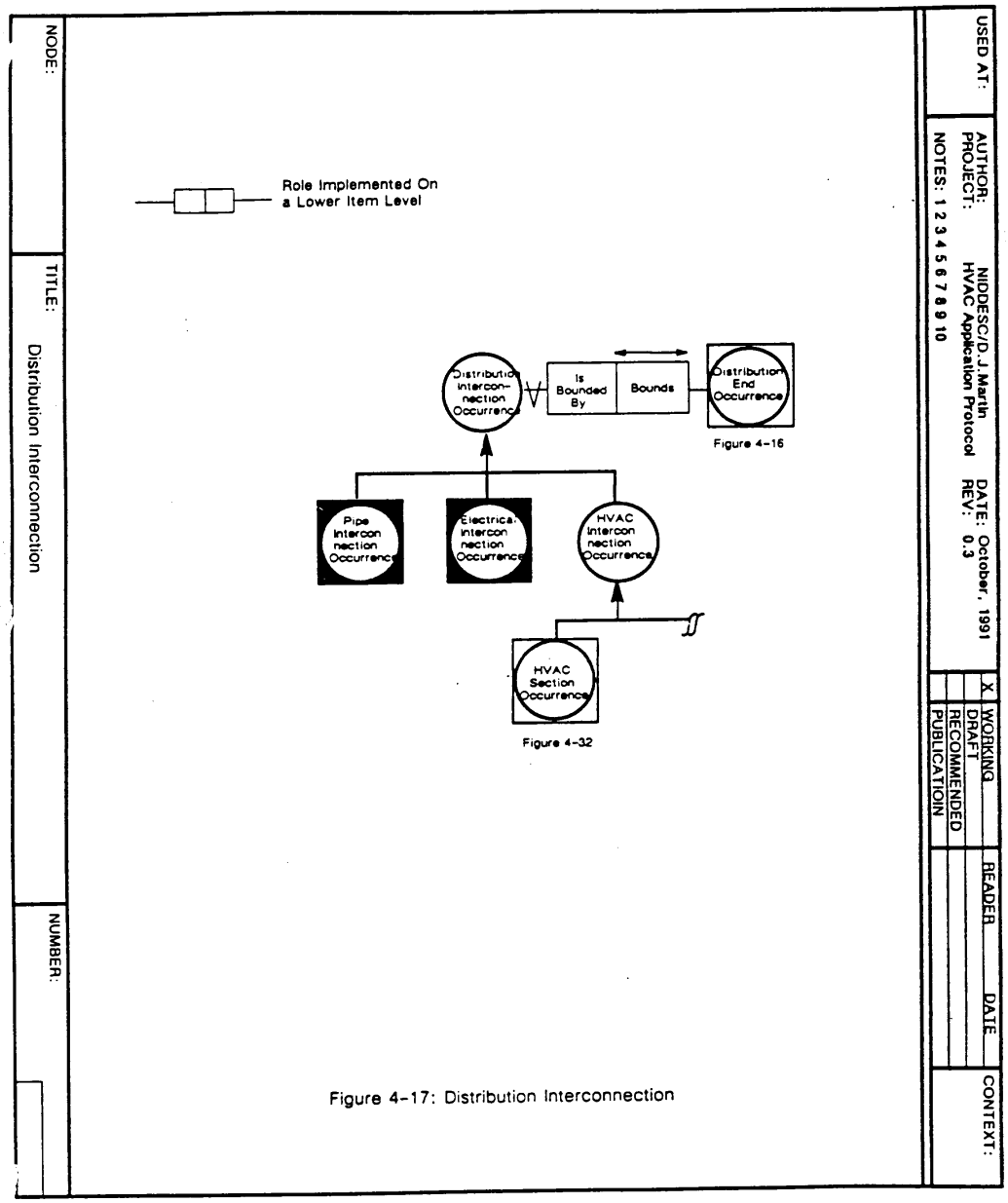

Figure F. 17 Distribution Interconnection

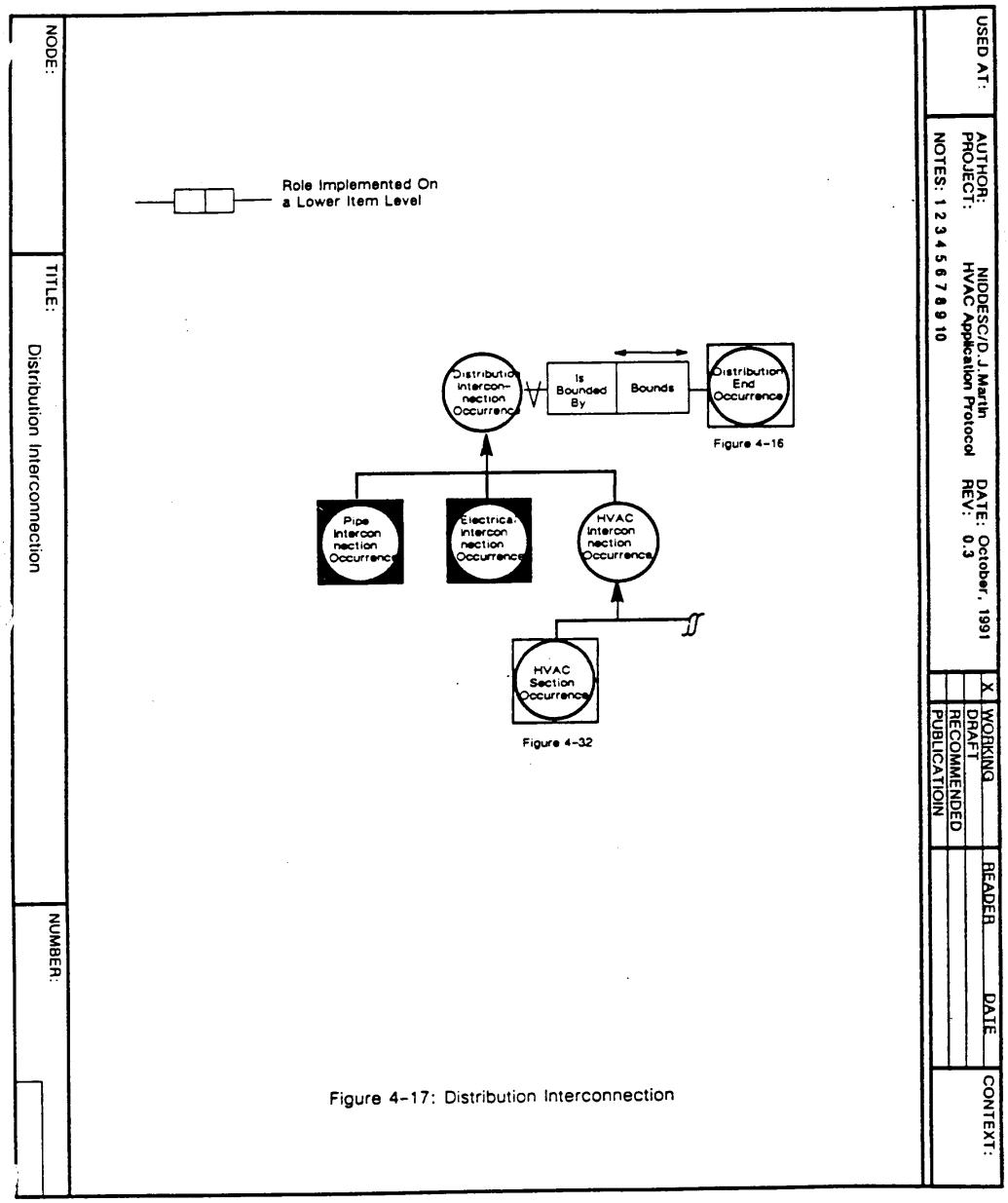

Figure F. 18 Distribution Interconnection

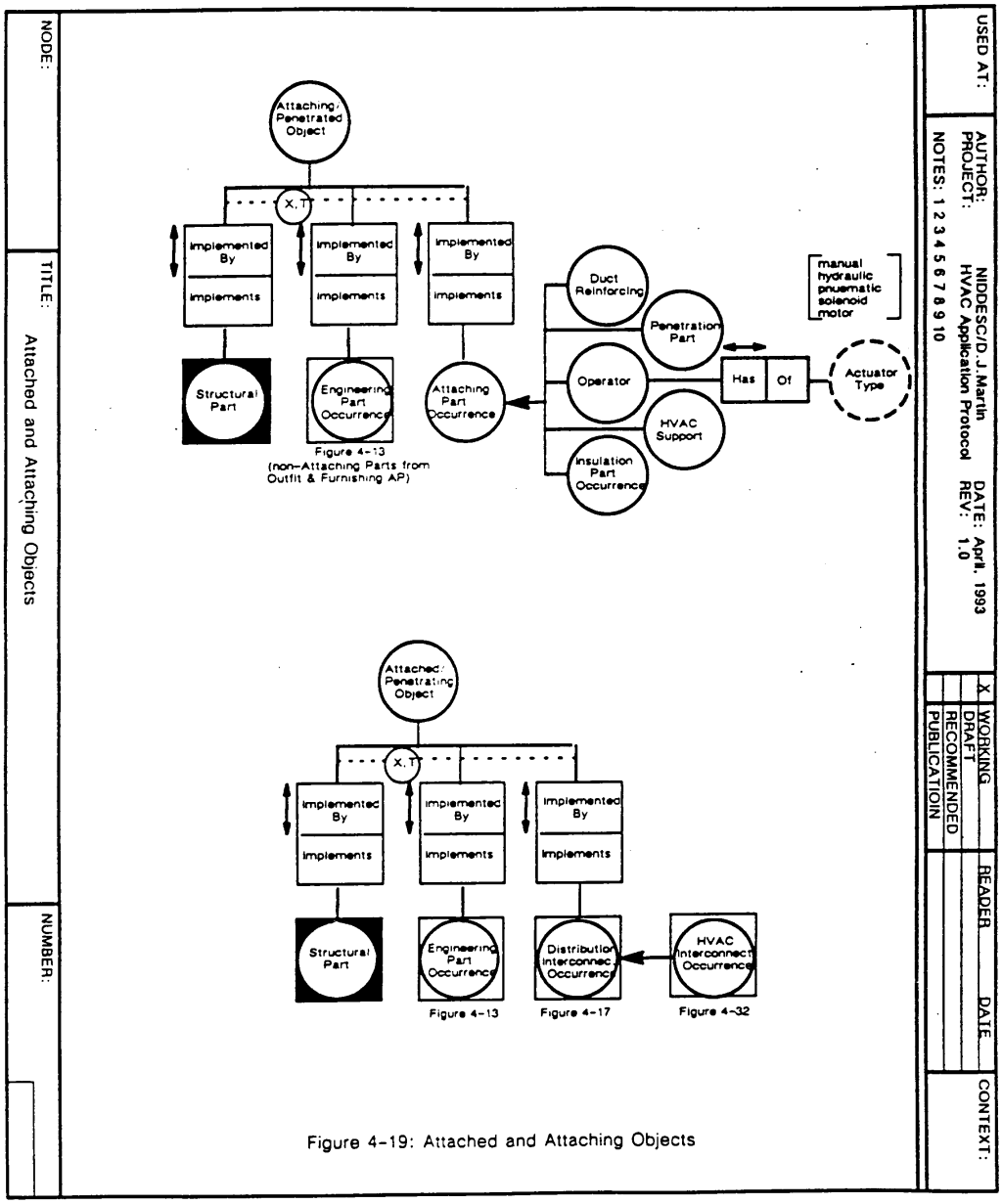

Figure F. 19 Attached and Attaching Objects

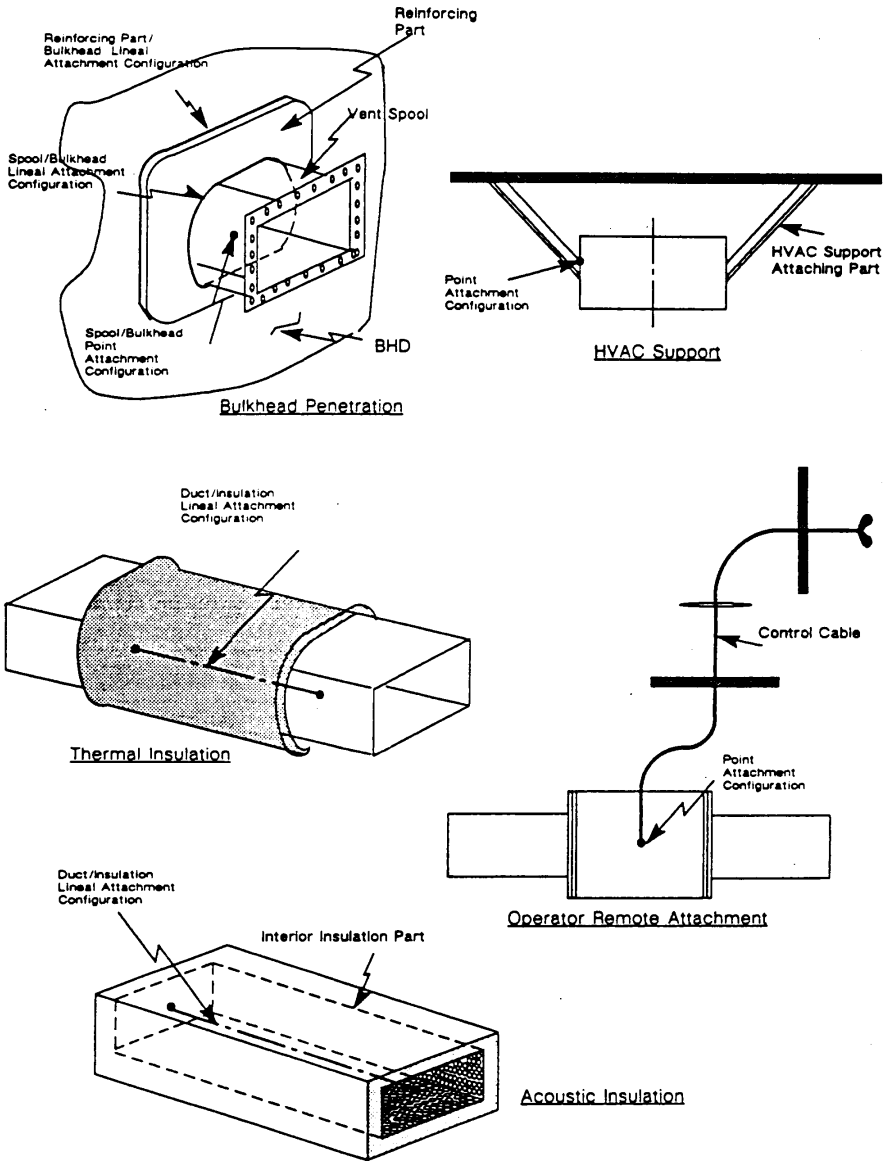

Figure 4-20: Example Attaching Parts And Attachment Configurations

Figure F. 20 Example Attaching Parts and Attachment Configurations

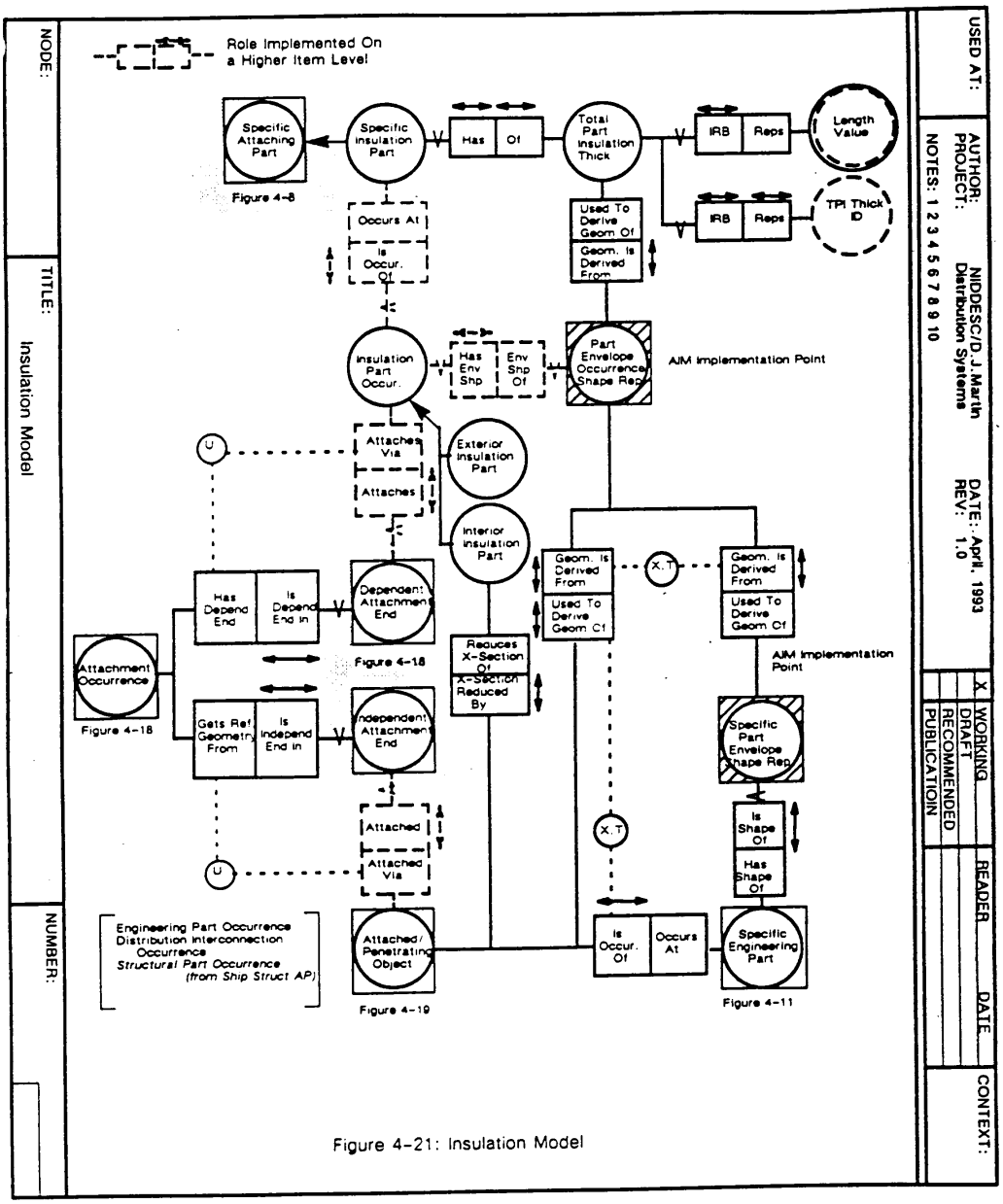

Figure 4-21: Insulation Model

Figure F. 21 Insulation Model

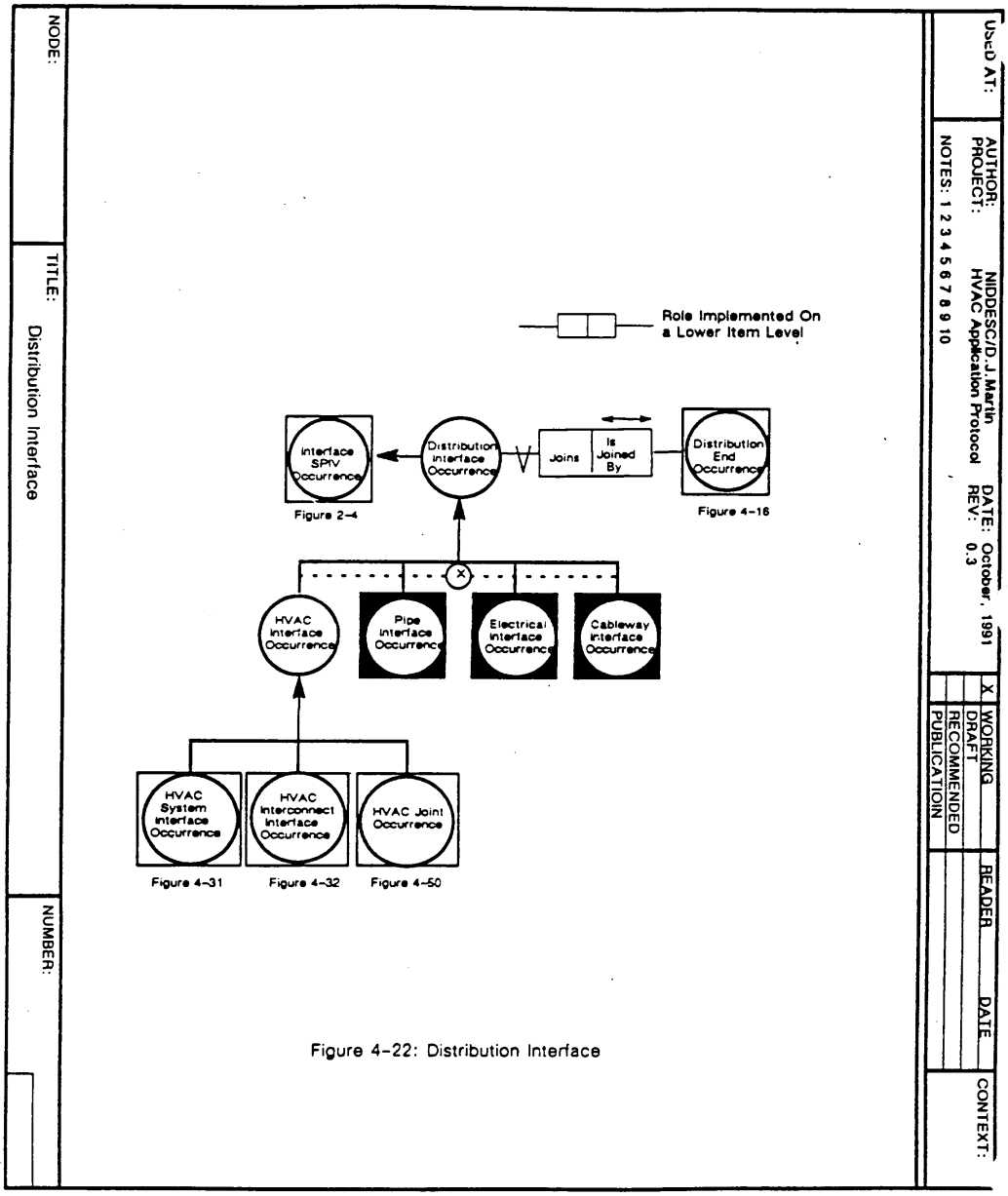

Figure F. 22 Distribution Interface

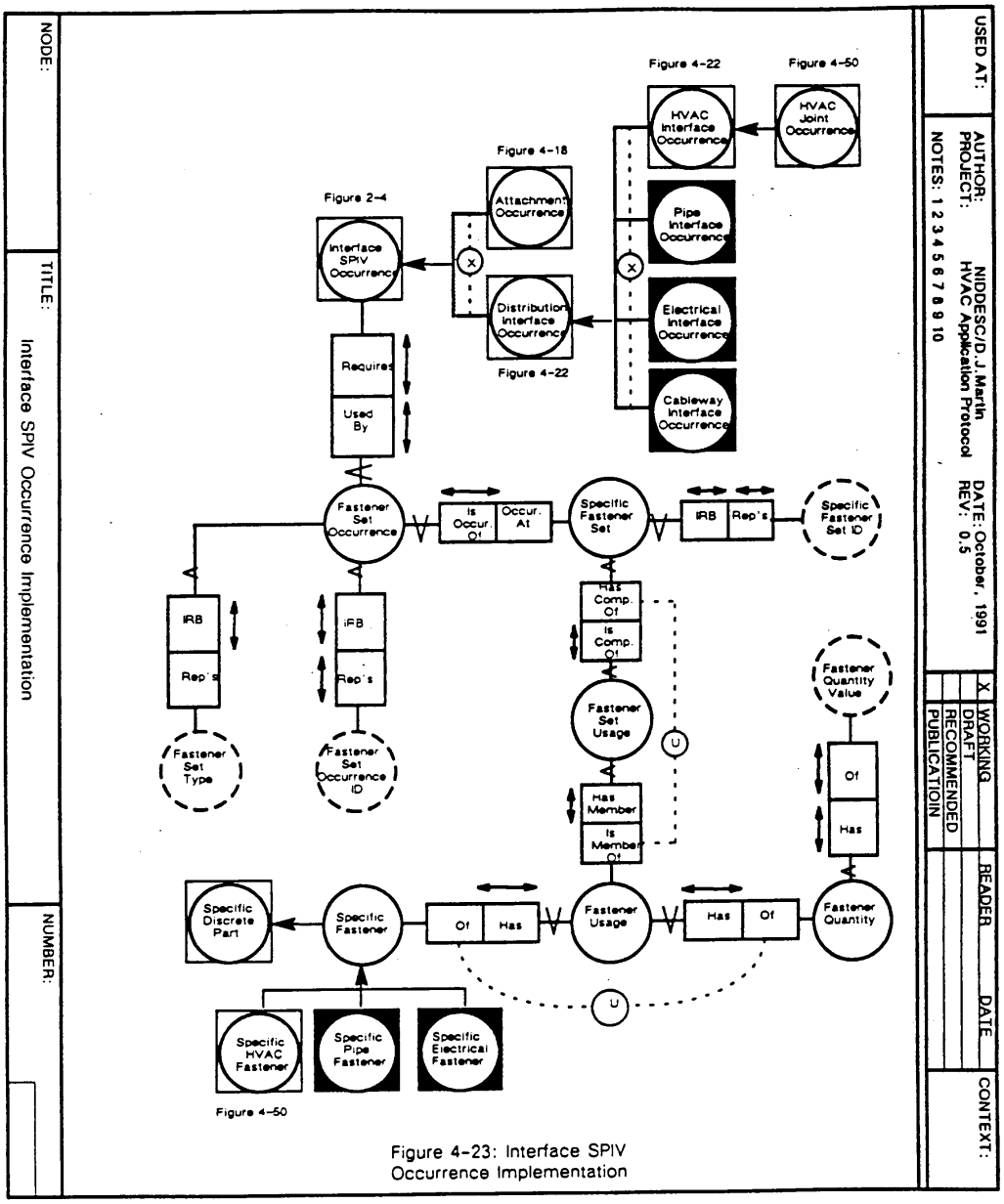

Figure F. 23 Interface SPIV Occurrence Implementation

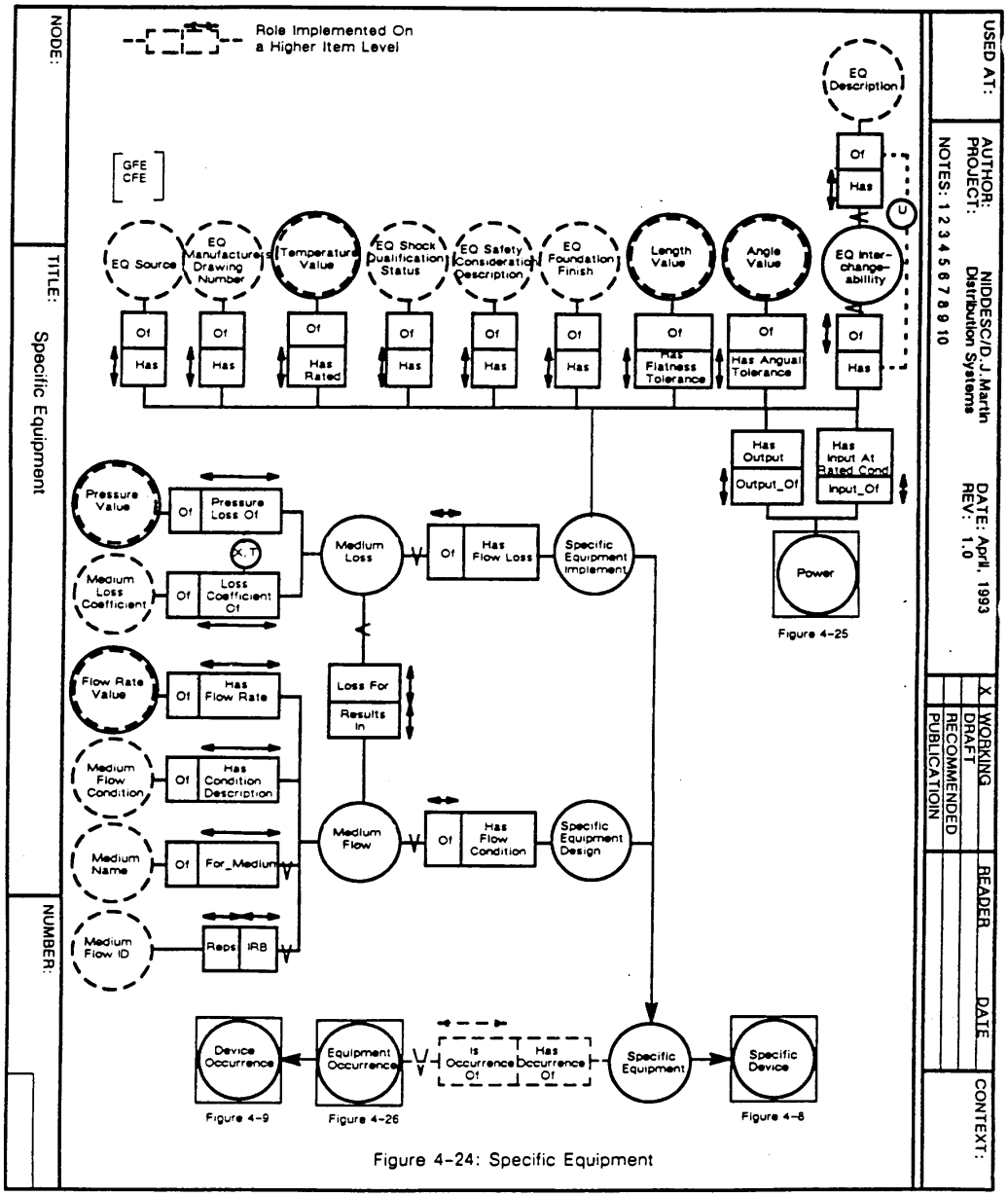

Figure F. 24 Specific Equipment

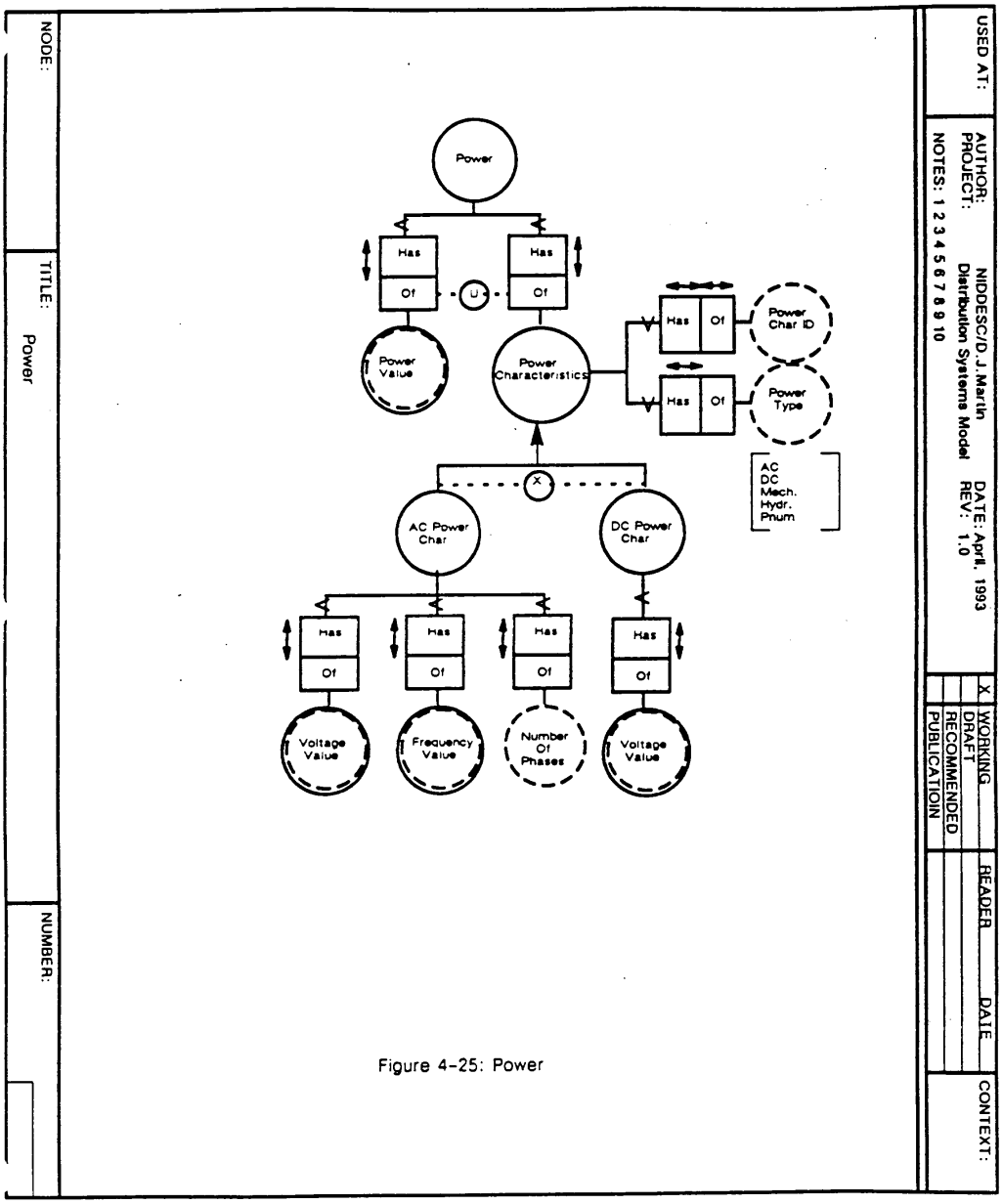

Figure 4-25: Power

Figure F. 25 Power

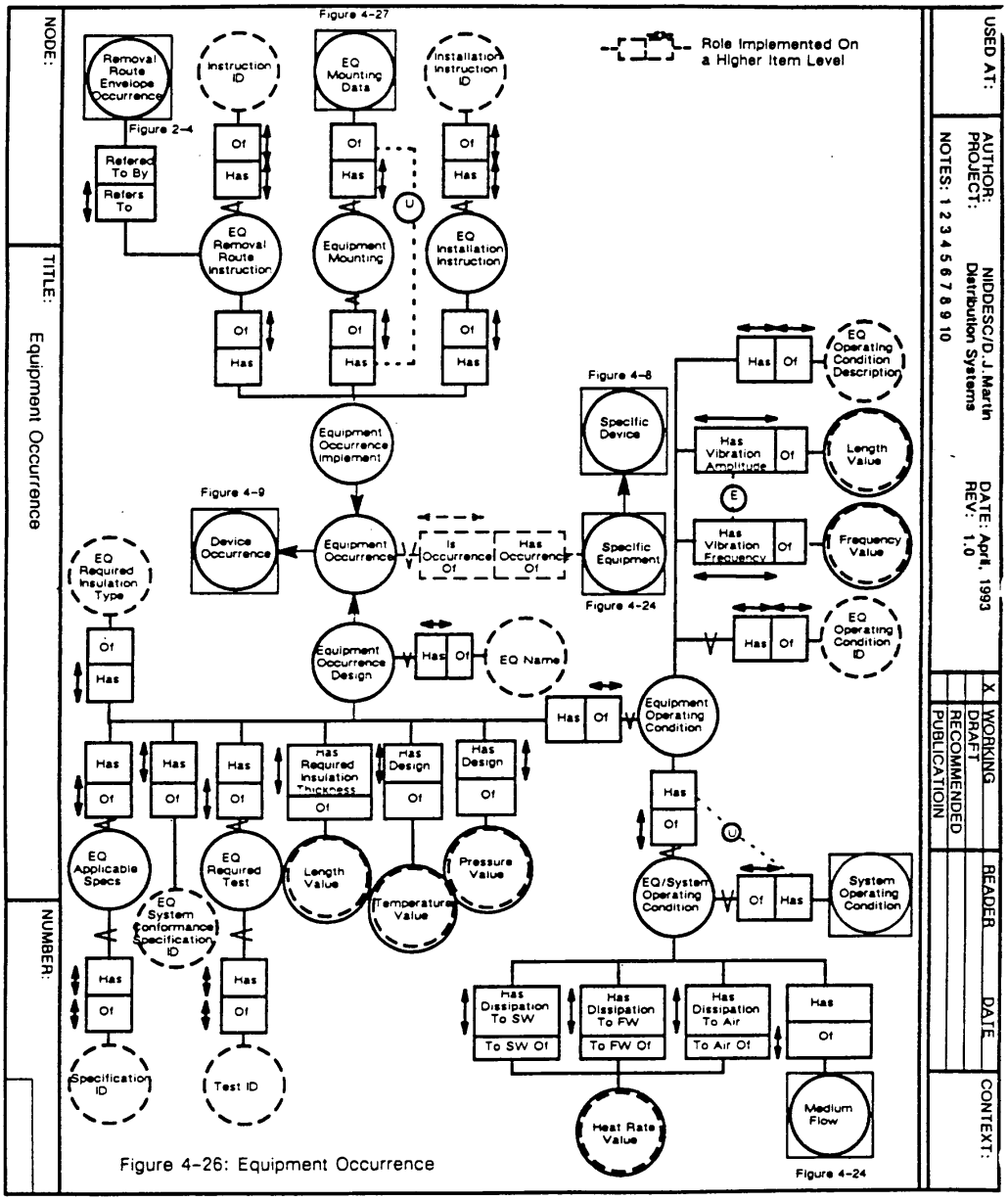

Figure 4-26: Equipment Occurrence

Figure F. 26 Equipment Occurrence

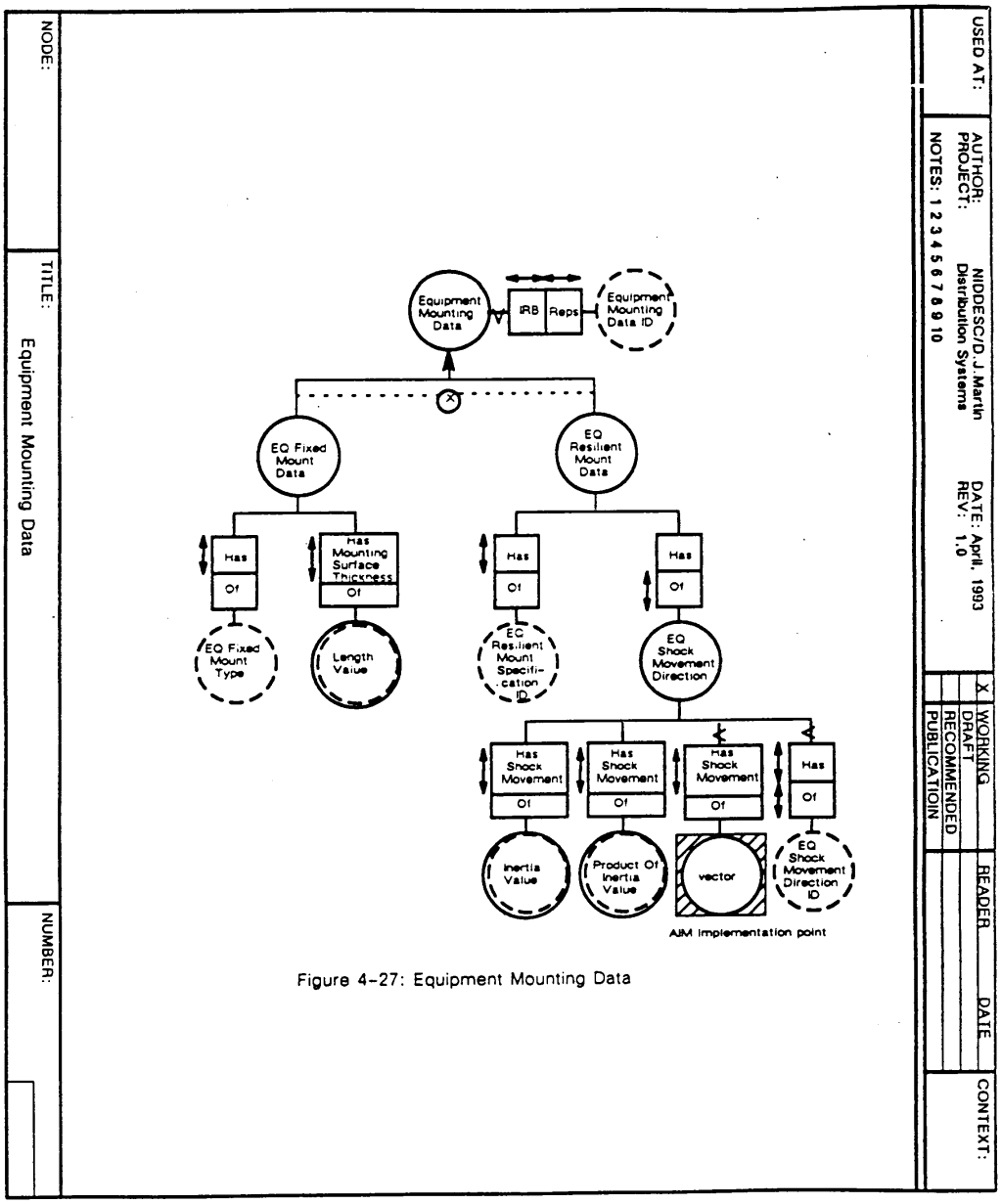

Figure 4-27: Equipment Mounting Data

Figure F. 27 Equipment Mounting Data

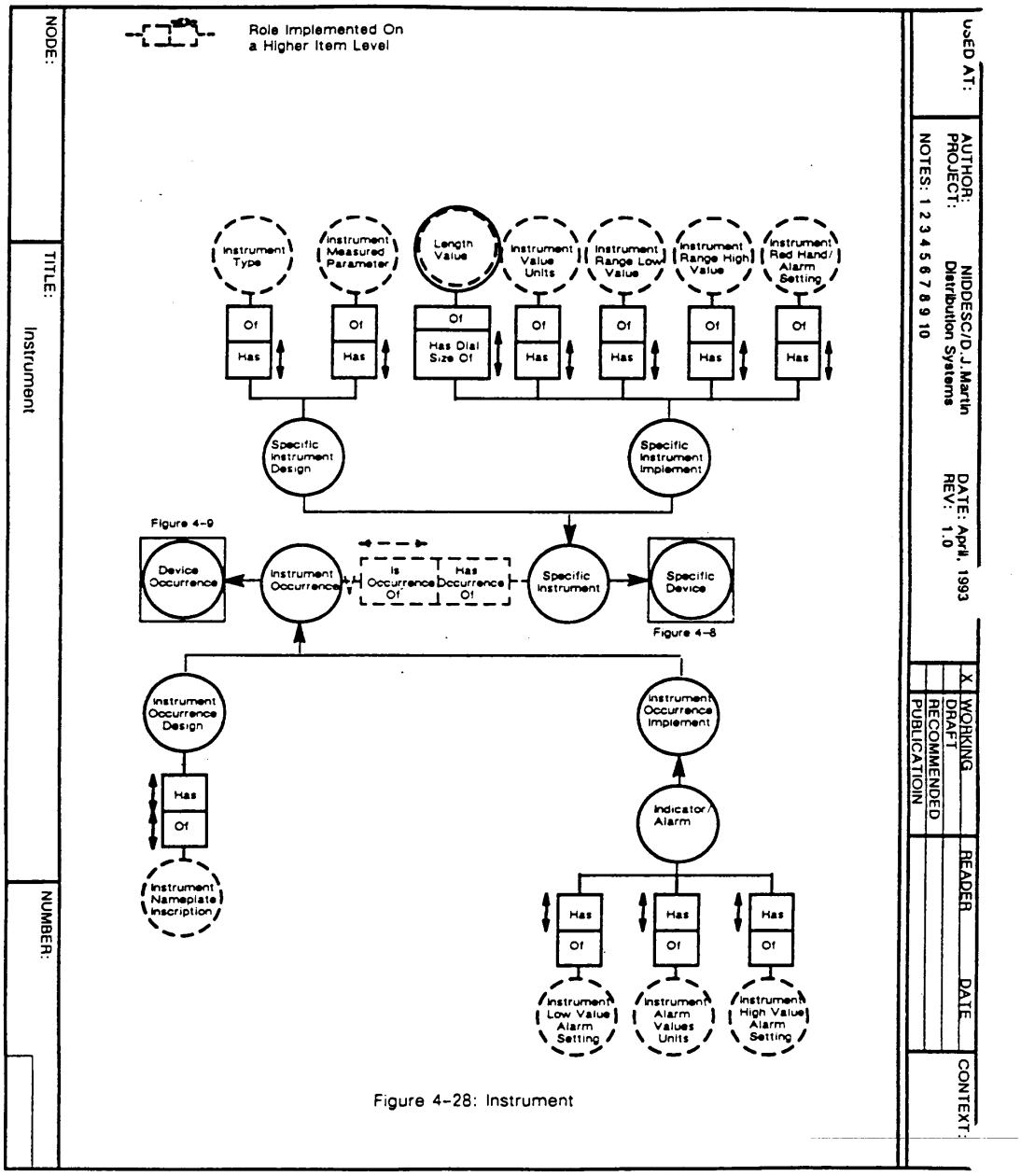

Figure F. 28 Instrument

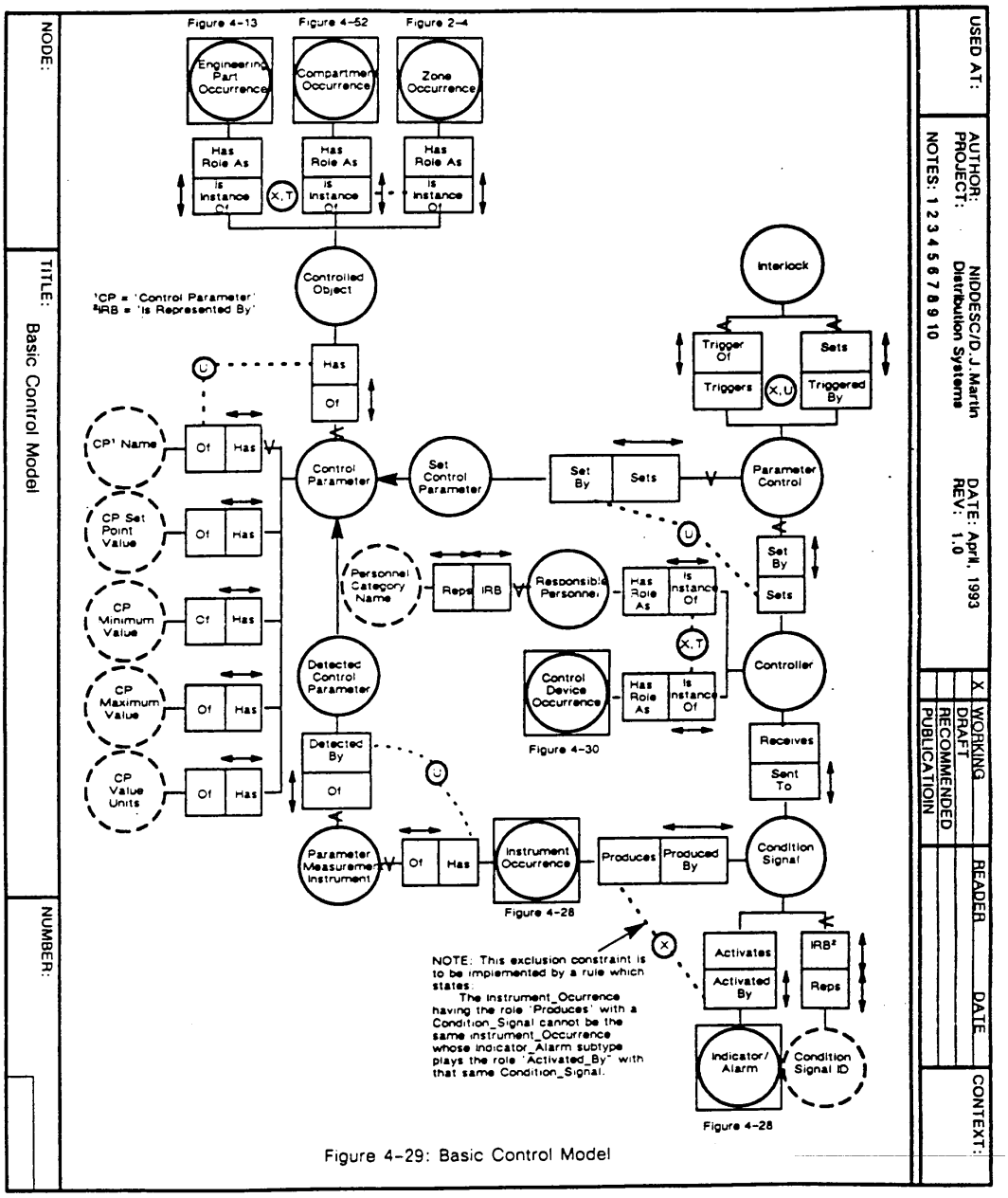

Figure F. 29 Basic Control Model

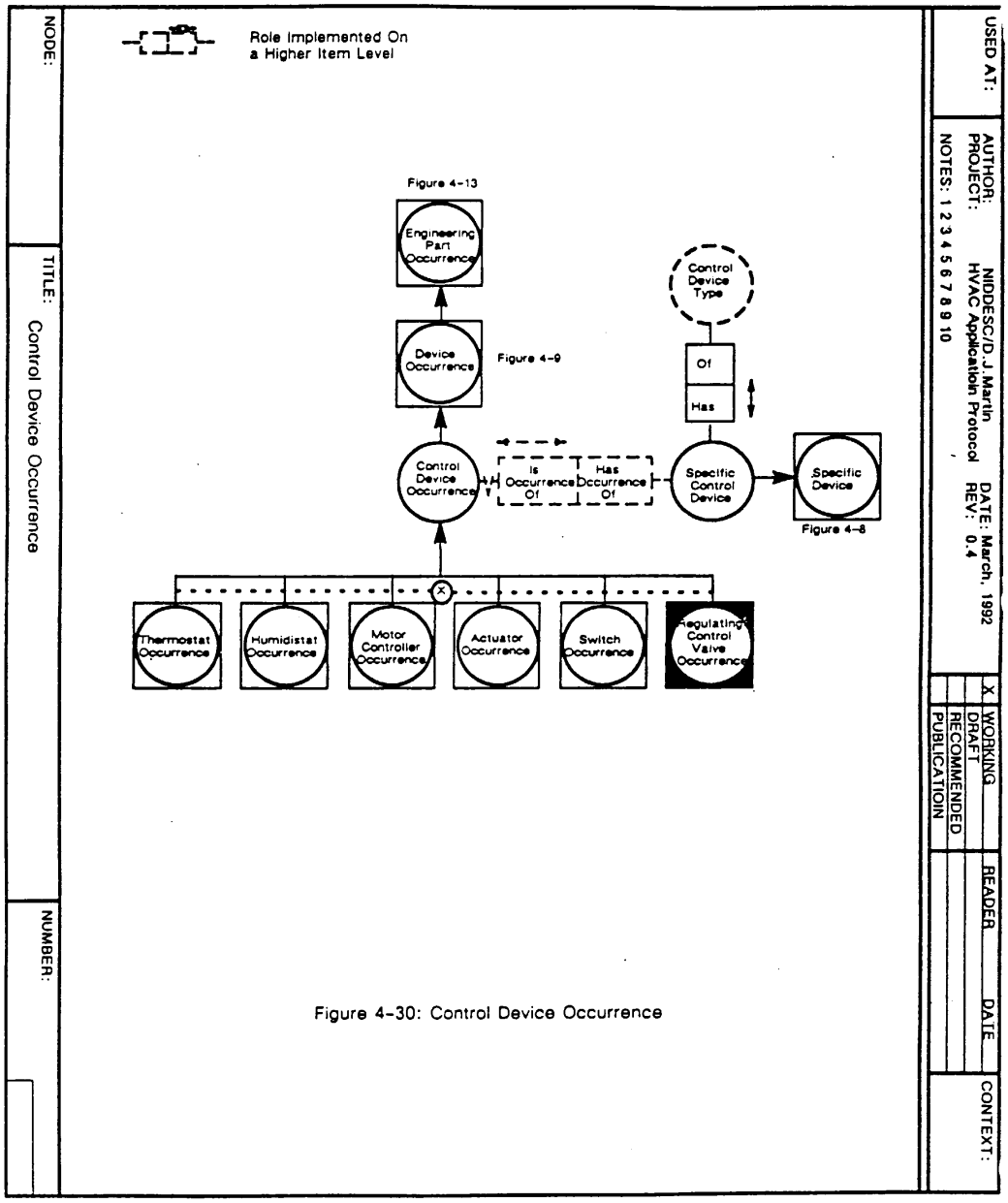

Figure F. 30 Control Device Occurrence

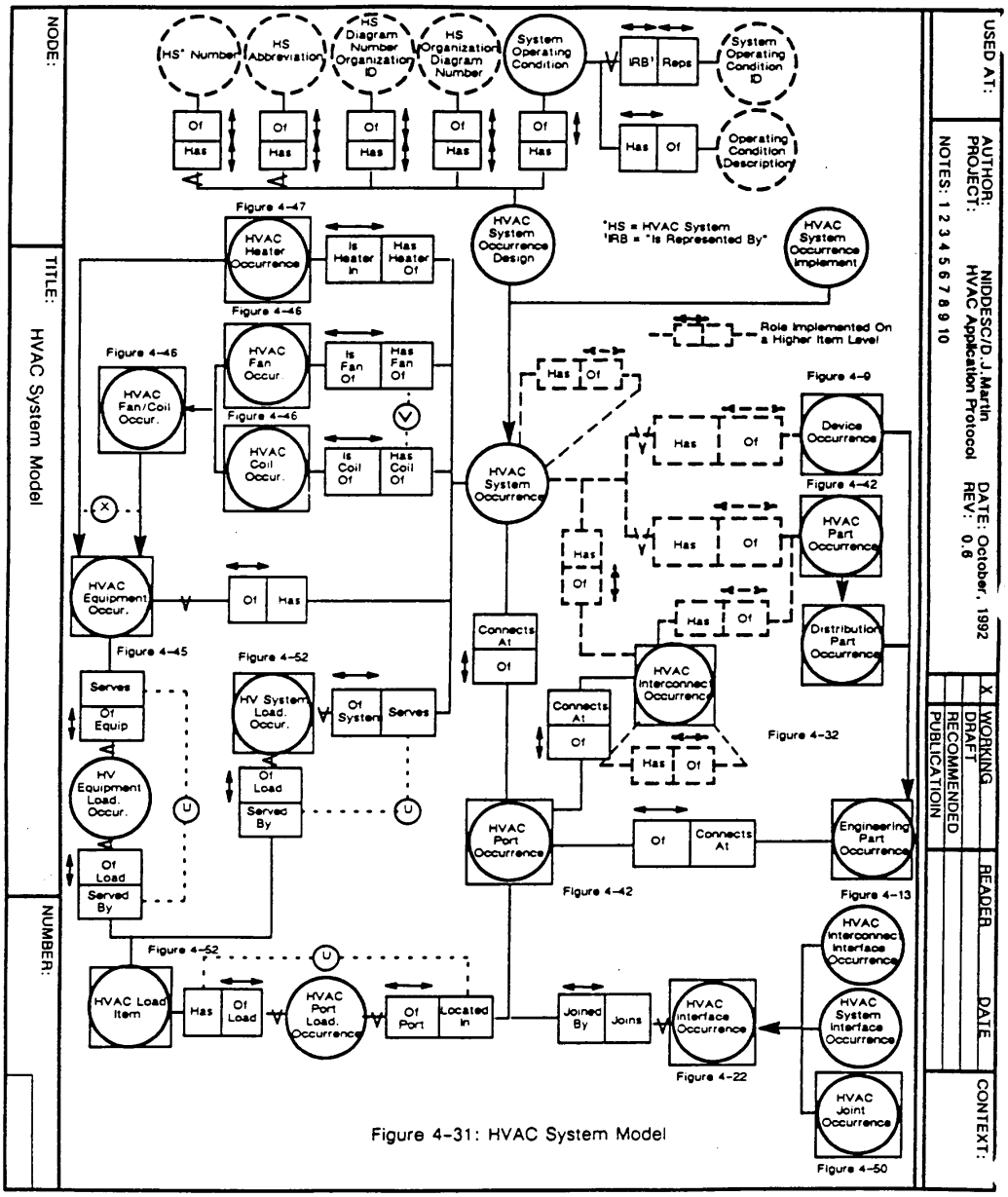

Figure 4-31: HVAC System Model

Figure F. 31 HVAC System Model

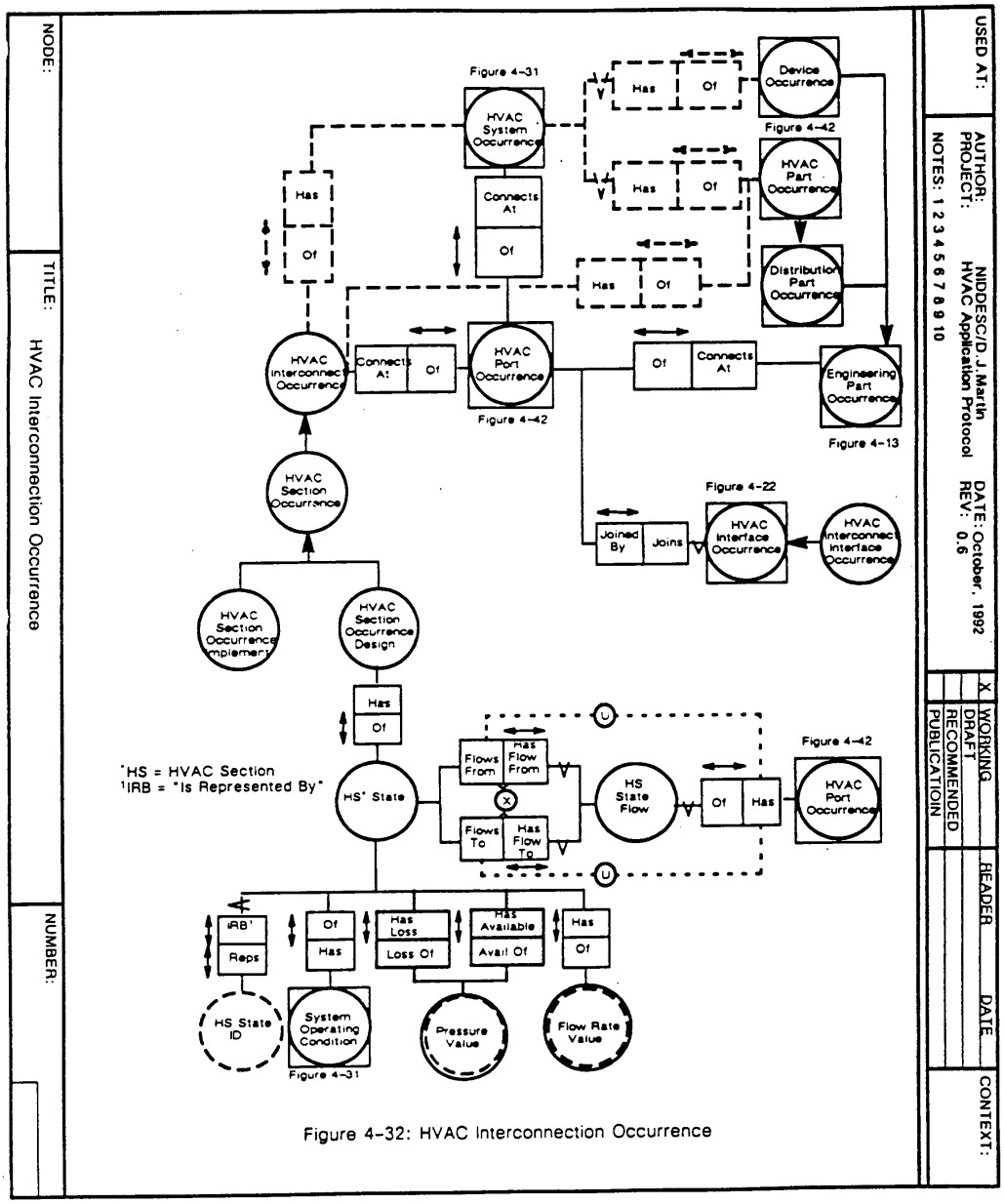

Figure 4-32: HVAC Interconnection Occurrence

Figure F. 32 HVAC Interconnection Occurrence

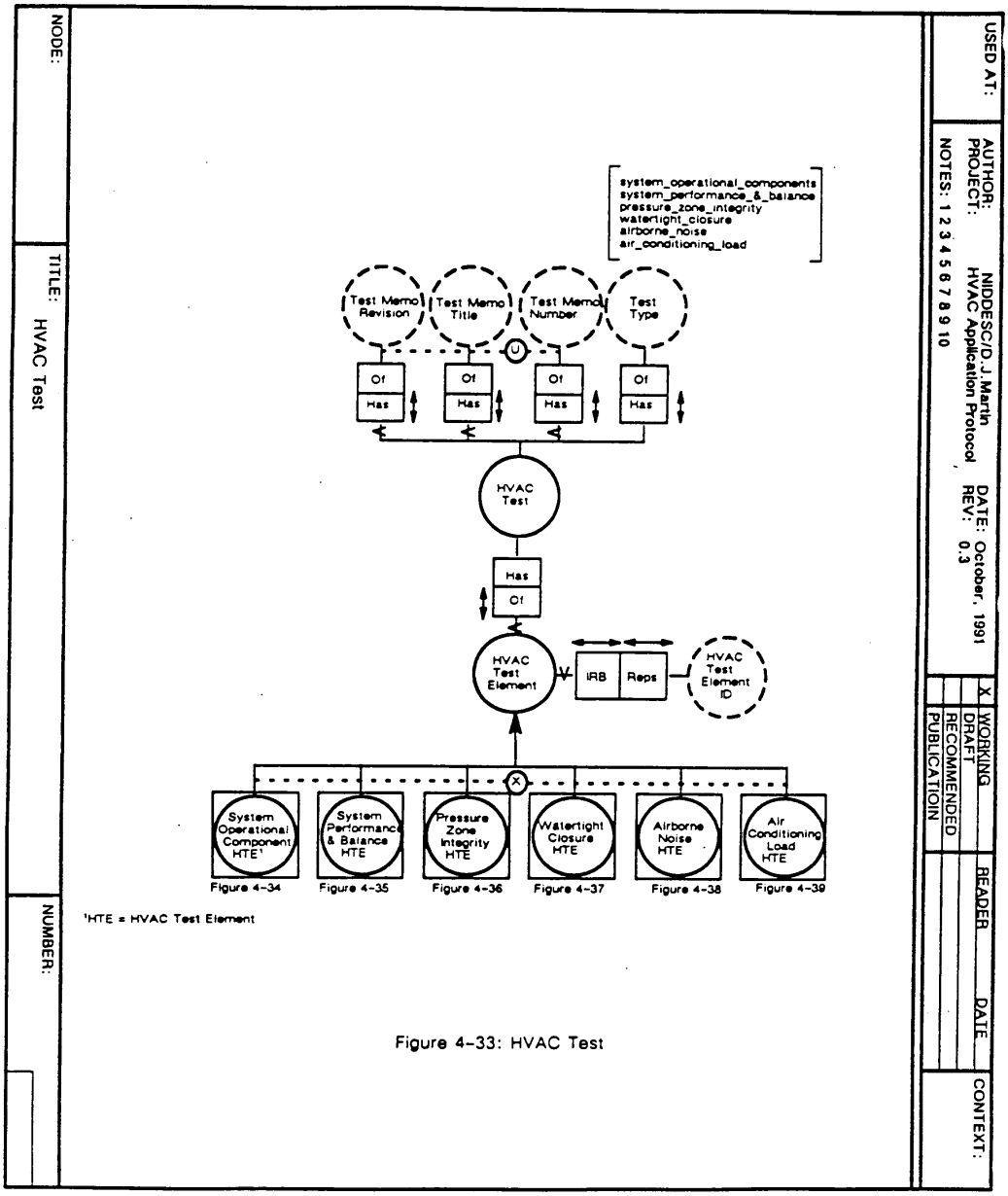

Figure F. 33 HVAC Test

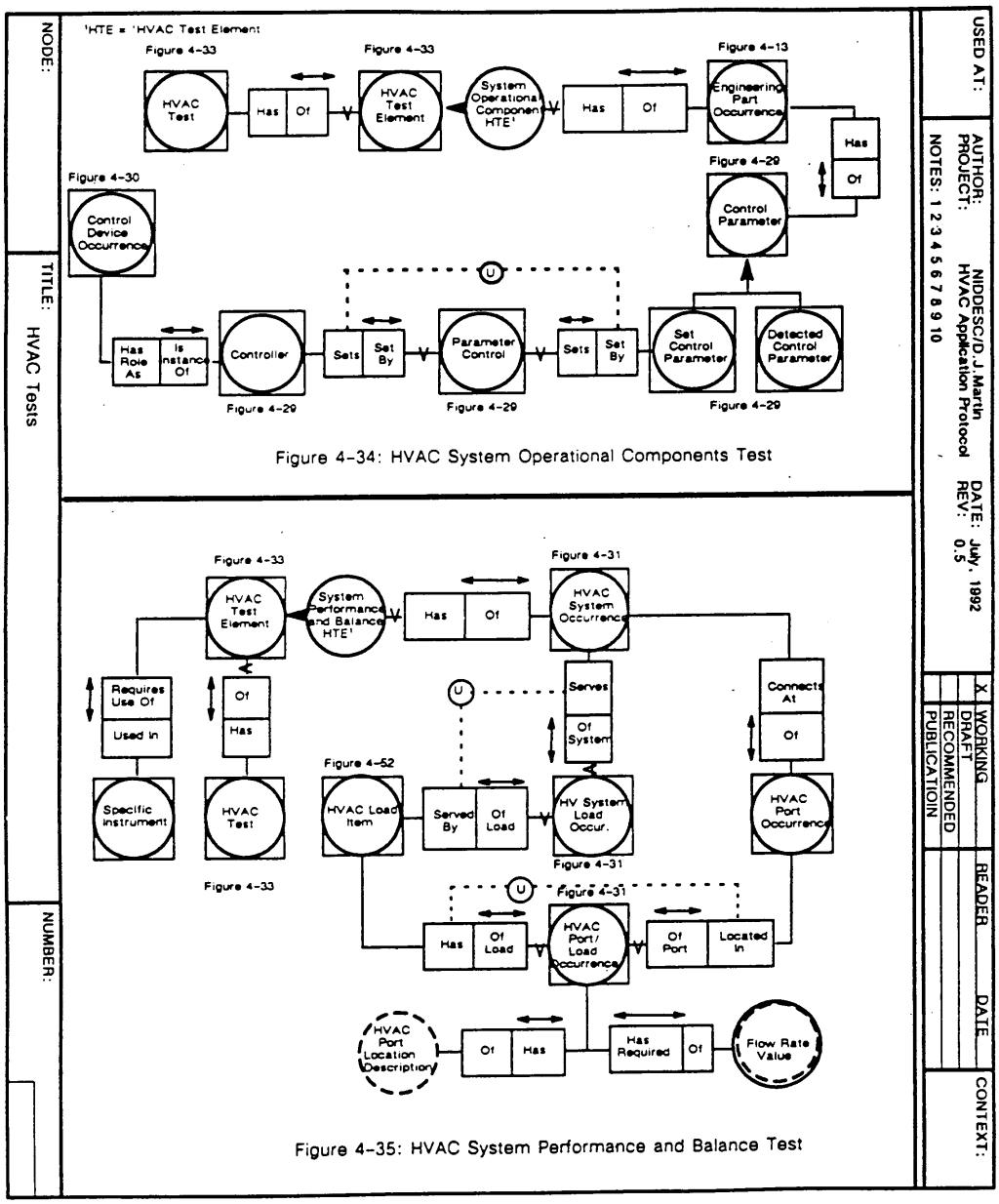

Figure F. 34 HVAC System Performance and Balance Test

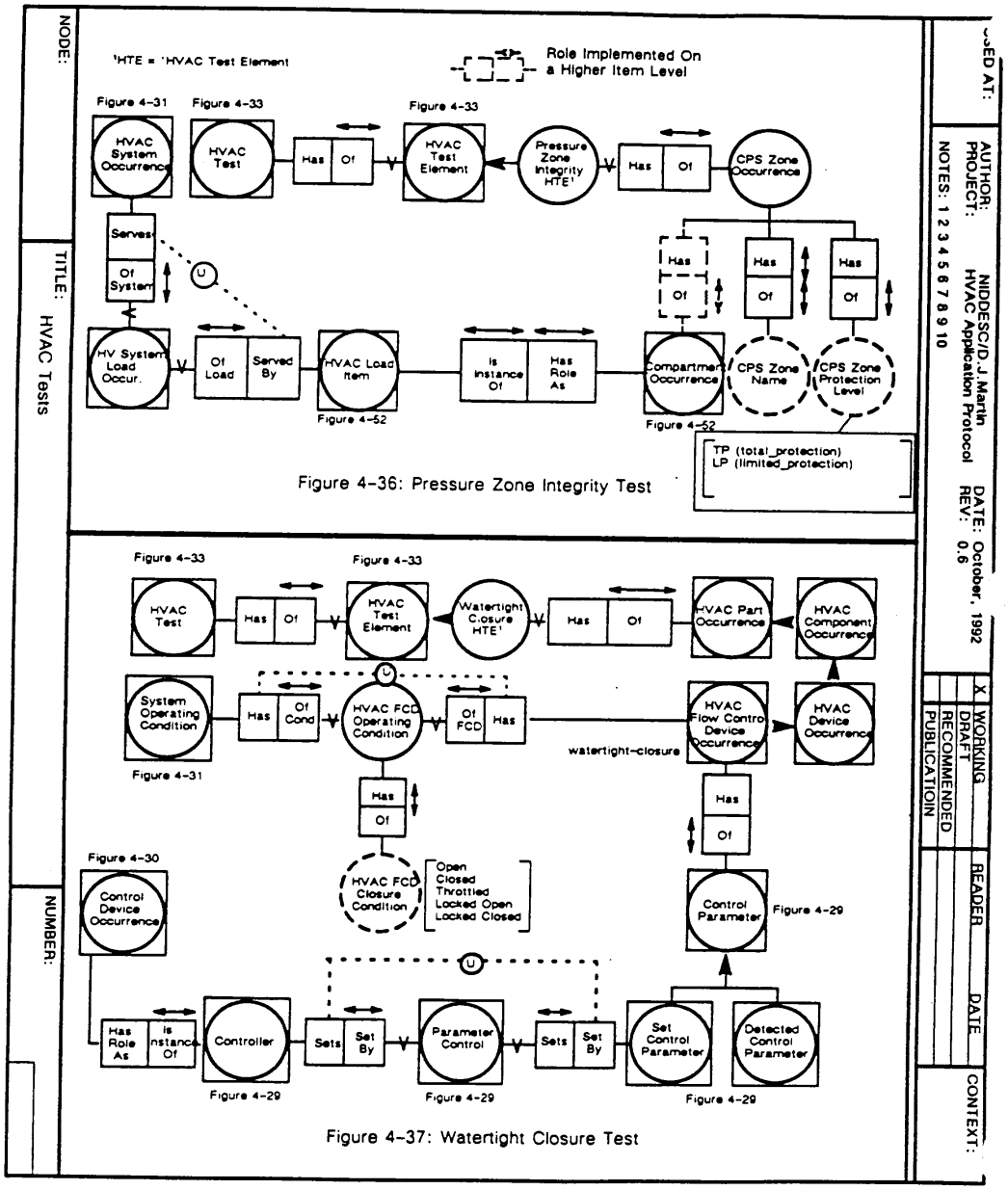

Figure F. 35 Watertight Closure Test

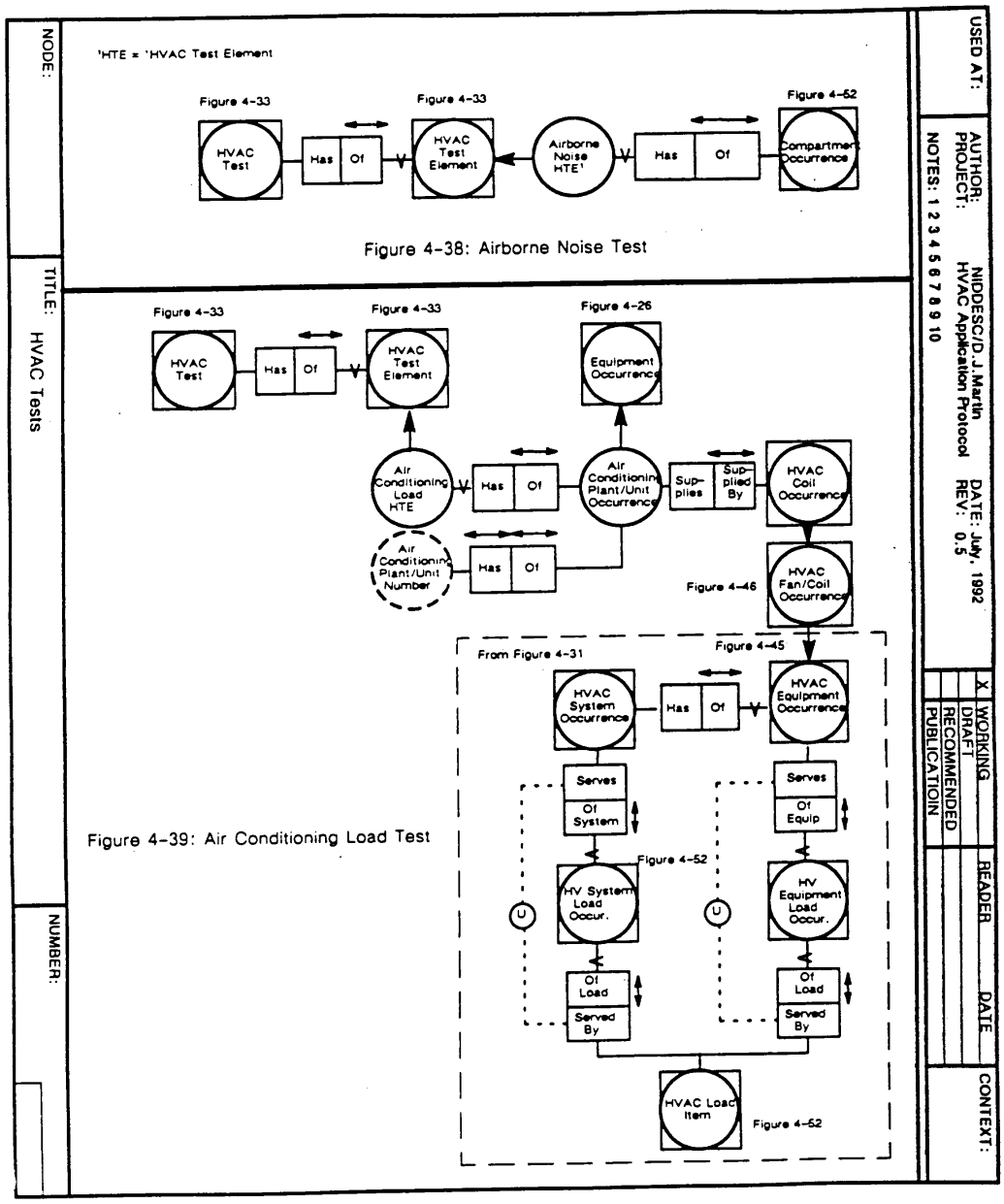

Figure F. 36 Air Conditioning Load Test

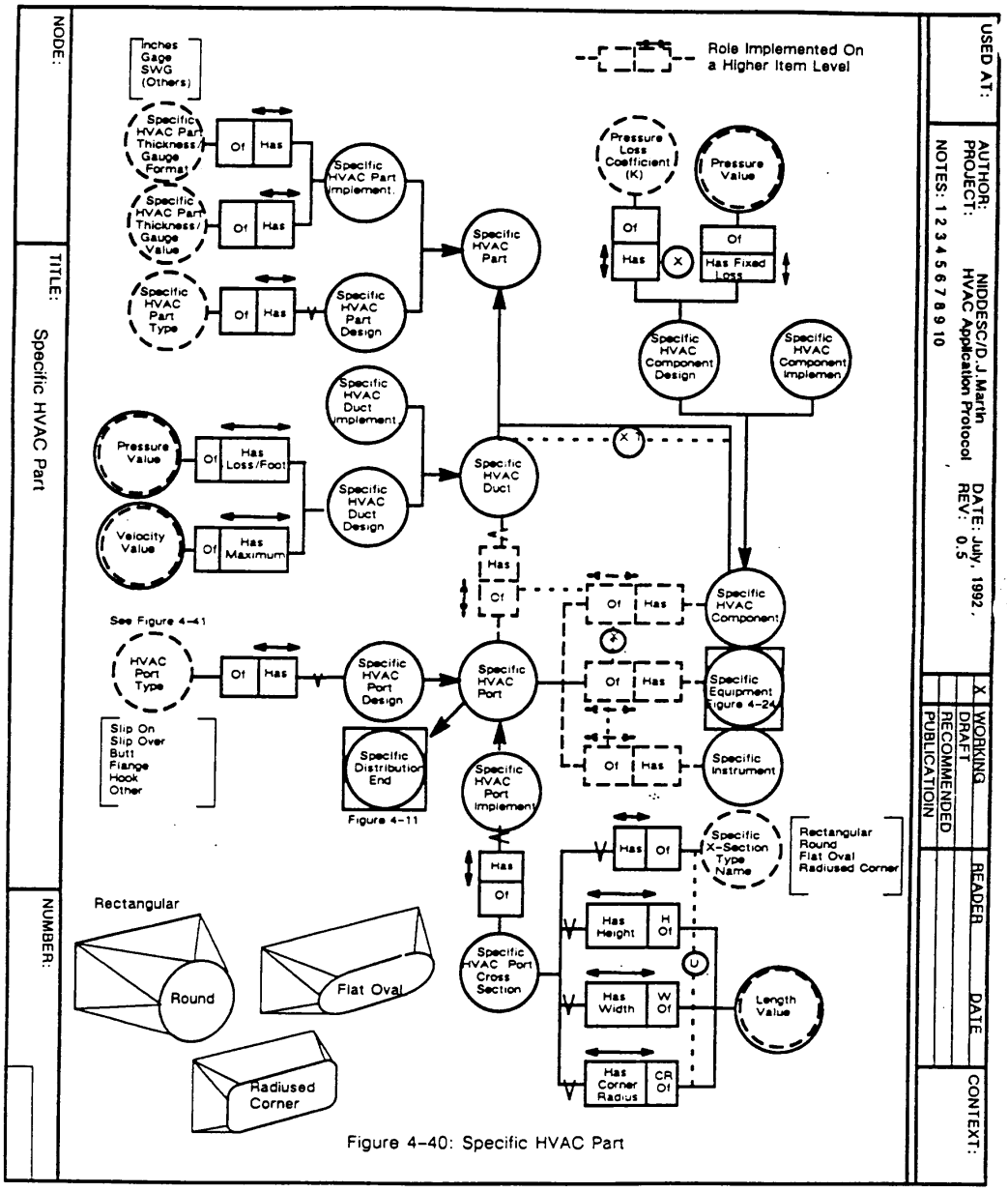

Figure 4-40: Specific HVAC Part

Figure F. 37 Specific HVAC Part

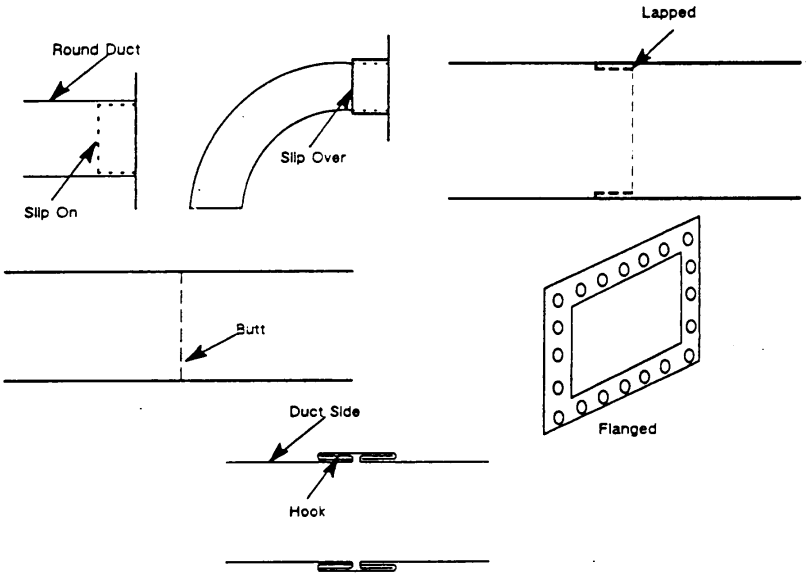

Figure 4-41: HVAC Port Types

Figure F. 38 HVAC Port Types

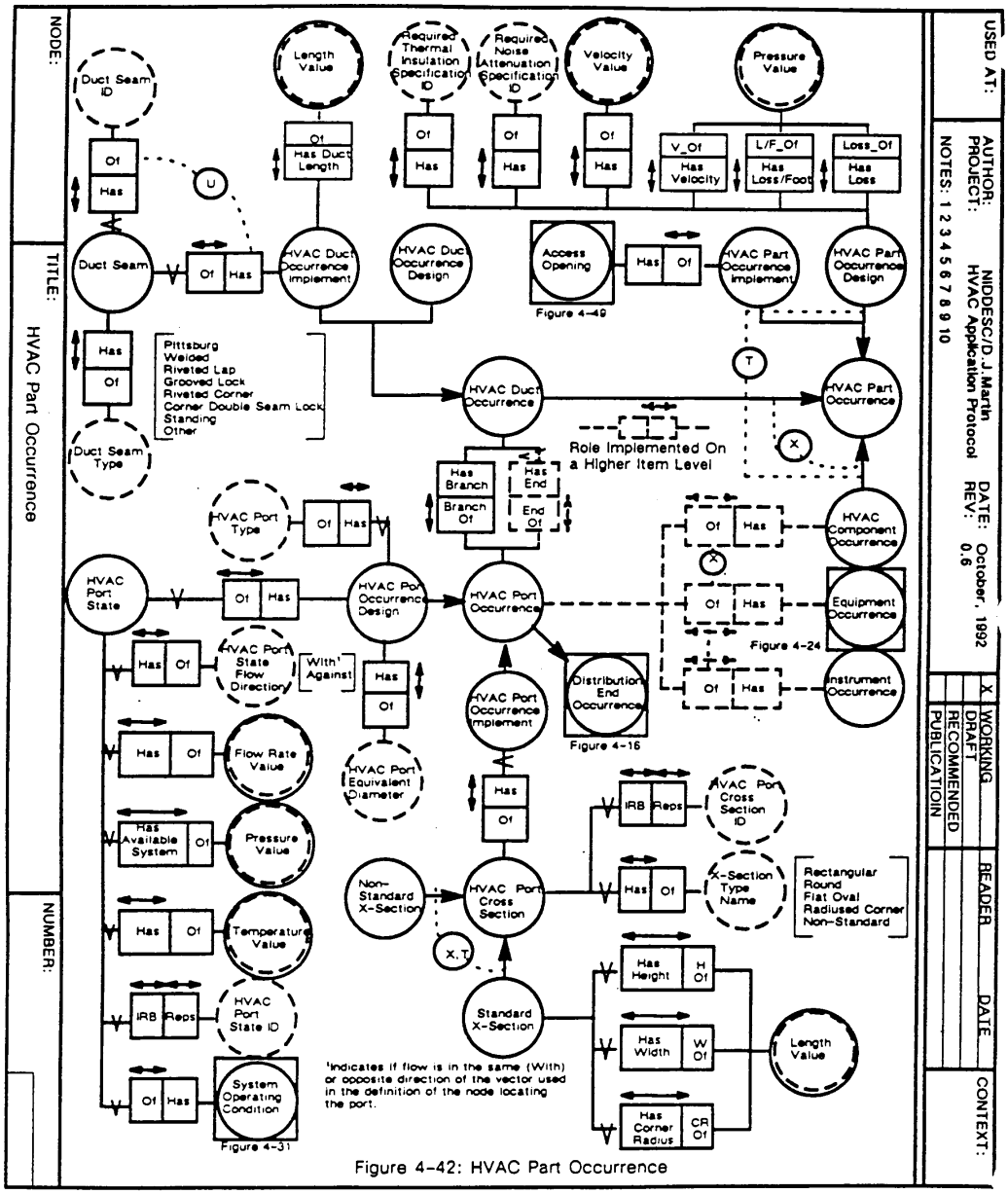

Figure 4-42: HVAC Part Occurrence

Figure F. 39 HVAC Part Occurrence

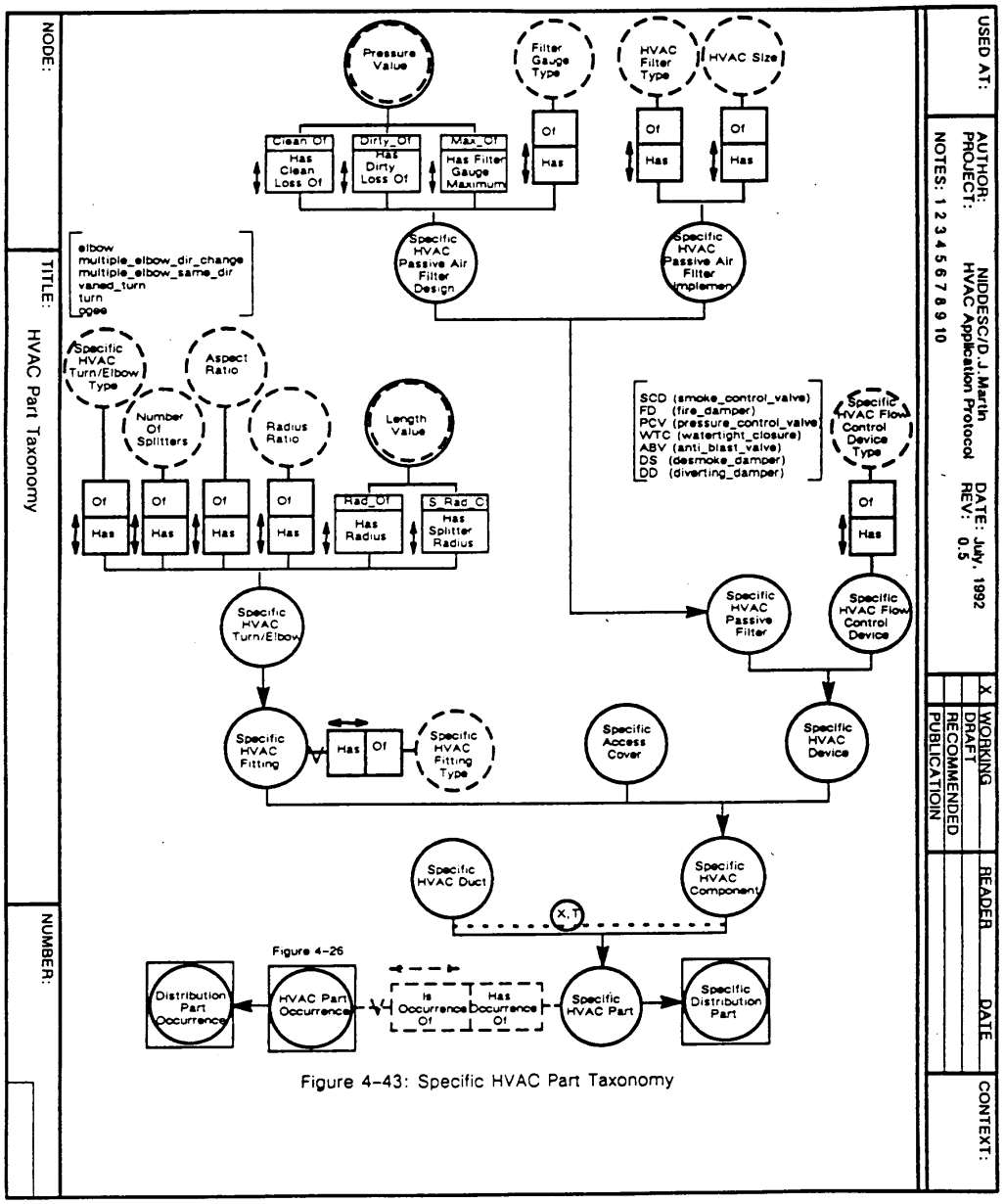

Figure F. 40 Specific HVAC Part Taxonomy

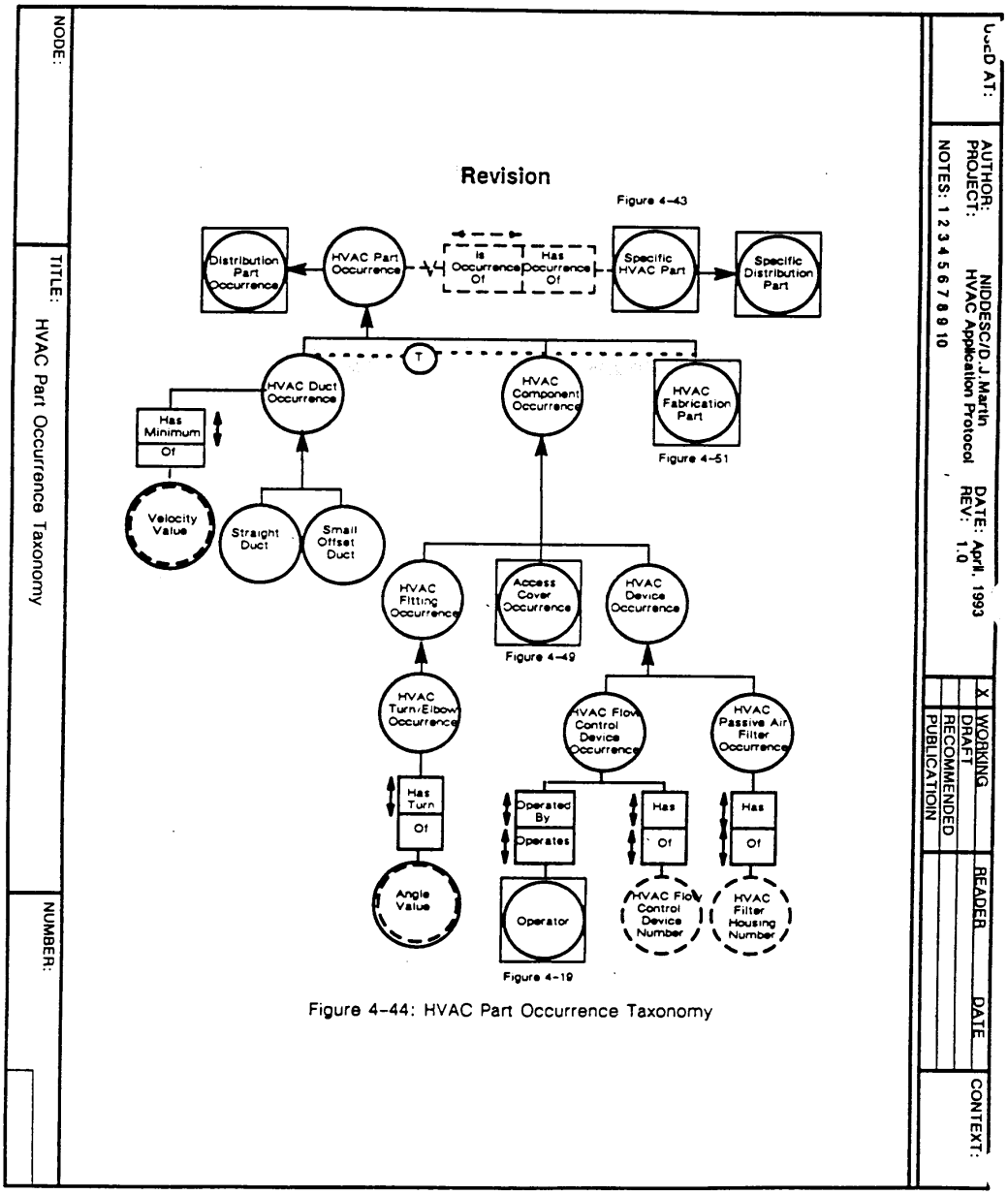

Figure F. 41 HVAC Part Occurrence Taxonomy

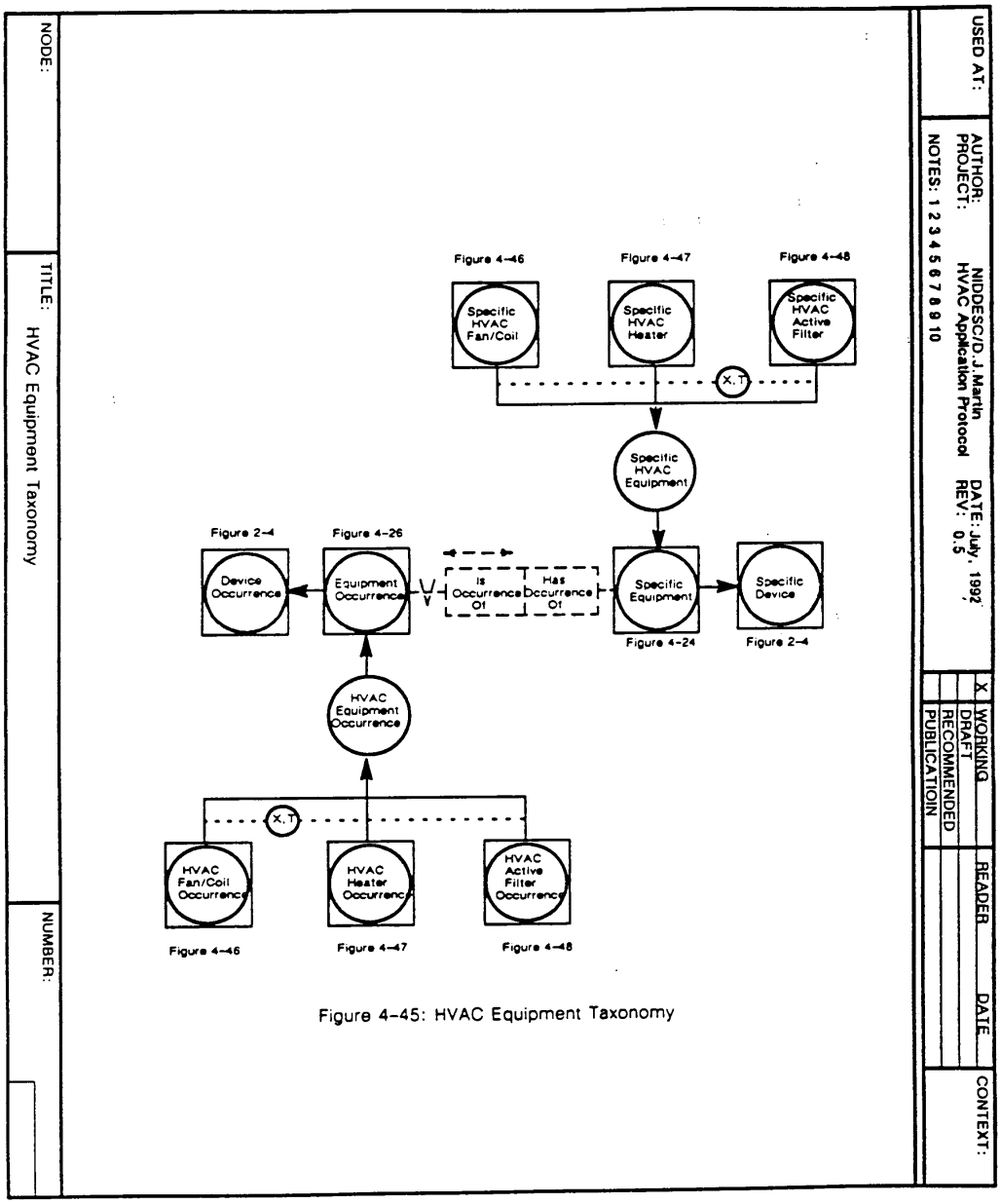

Figure F. 42 HVAC Equipment Taxonomy

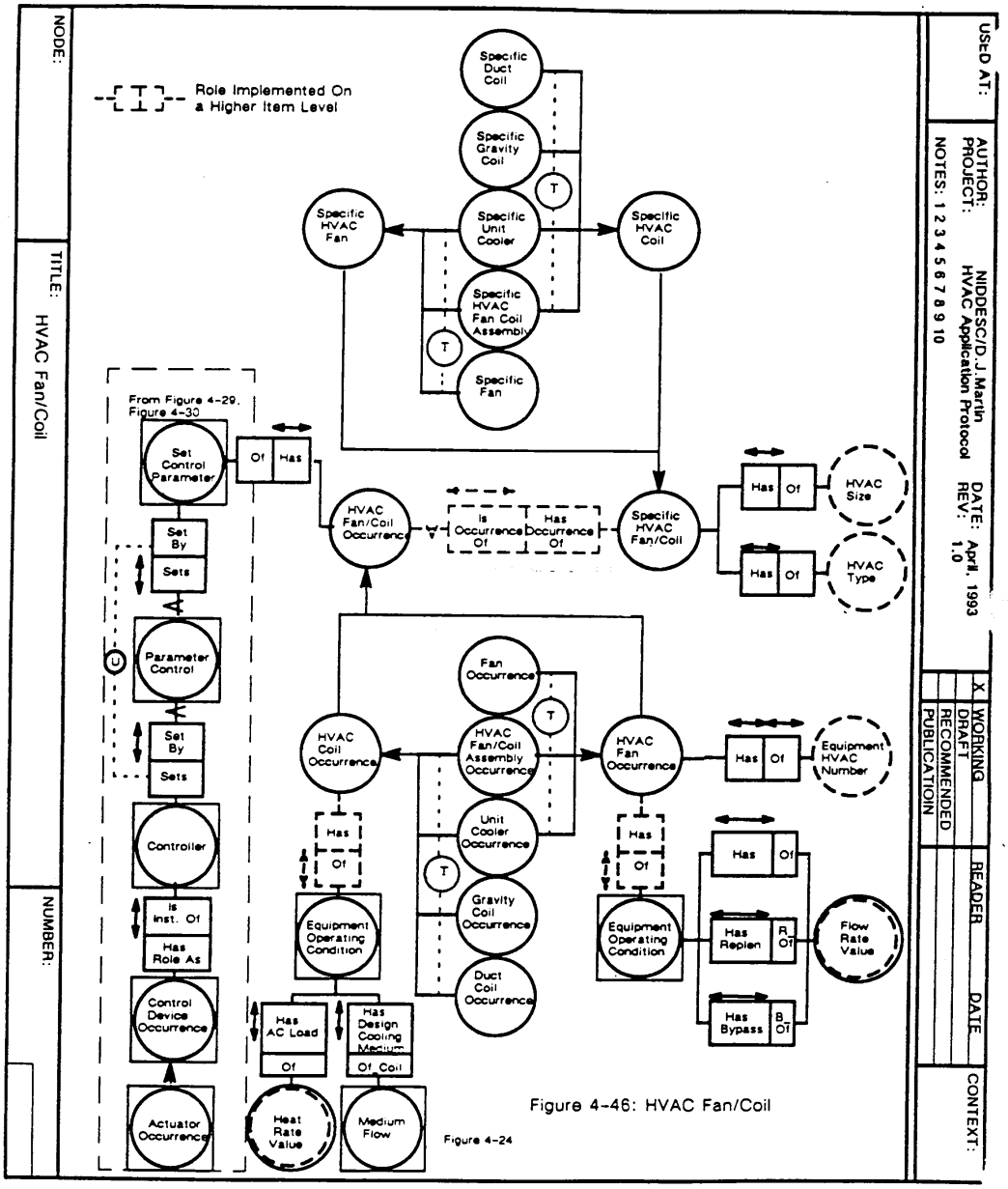

Figure F. 43 HVAC Fan/Coil

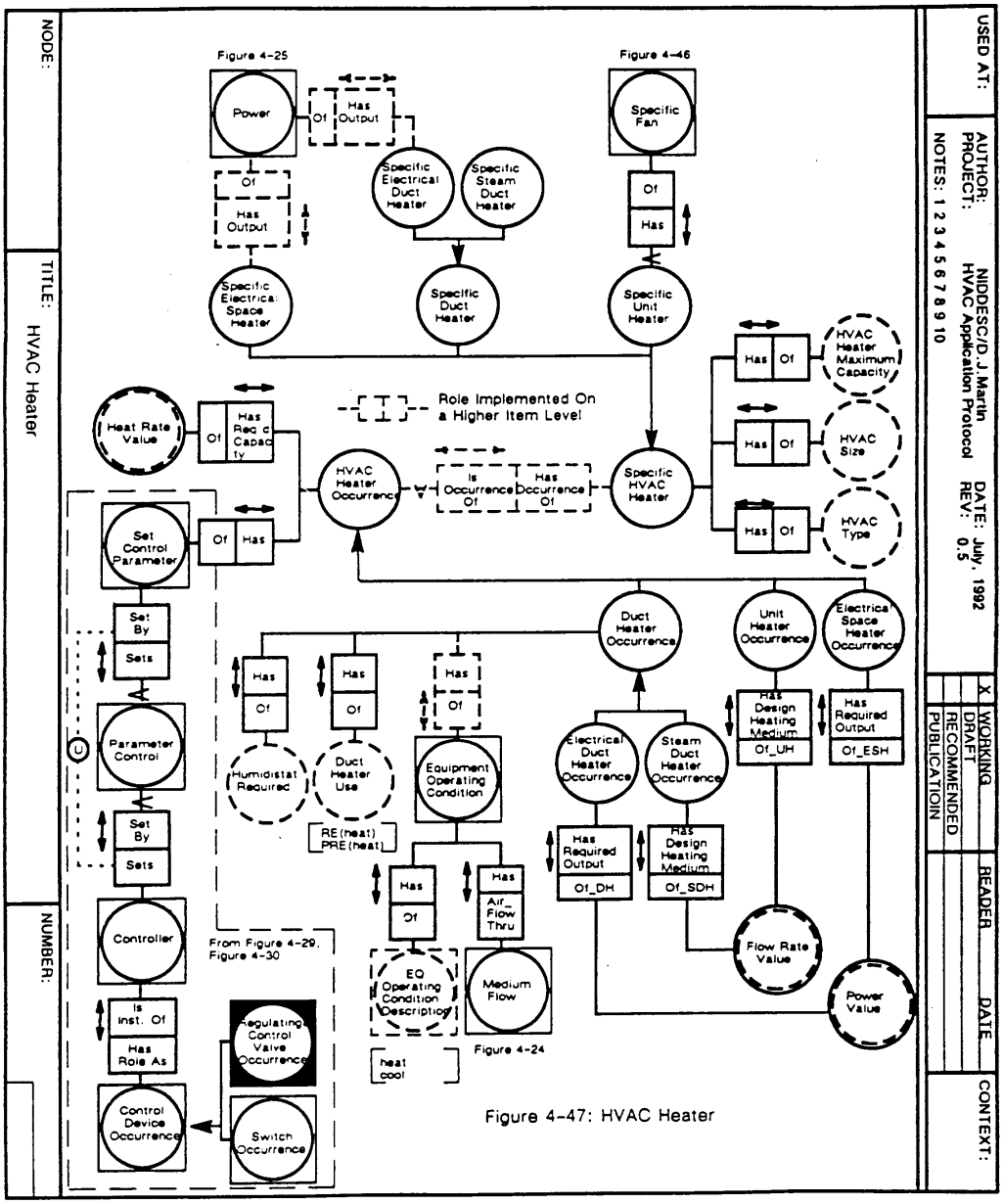

Figure F. 44 HVAC Heater

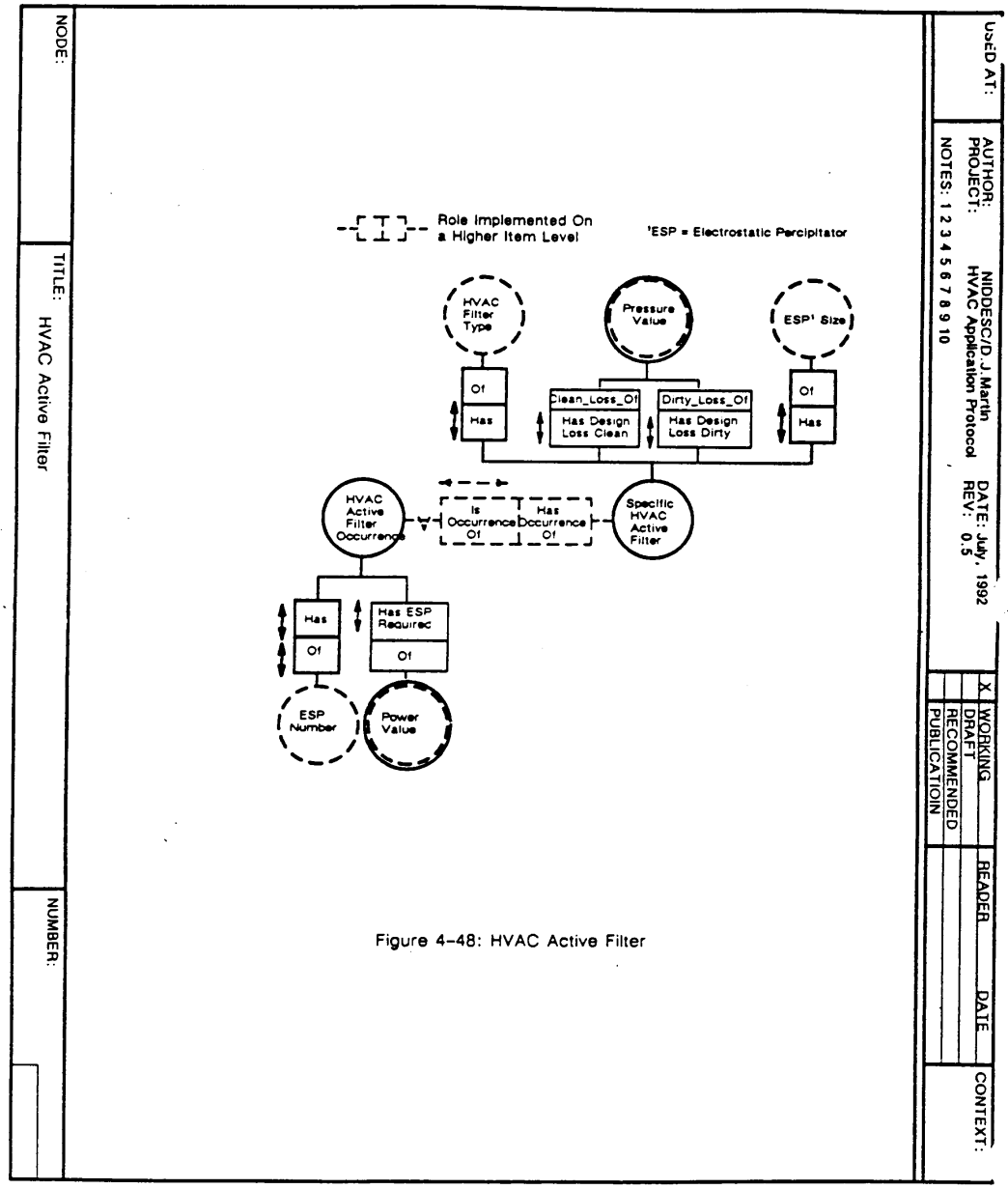

Figure 4-48: HVAC Active Filter

Figure F. 45 HVAC Active Filter

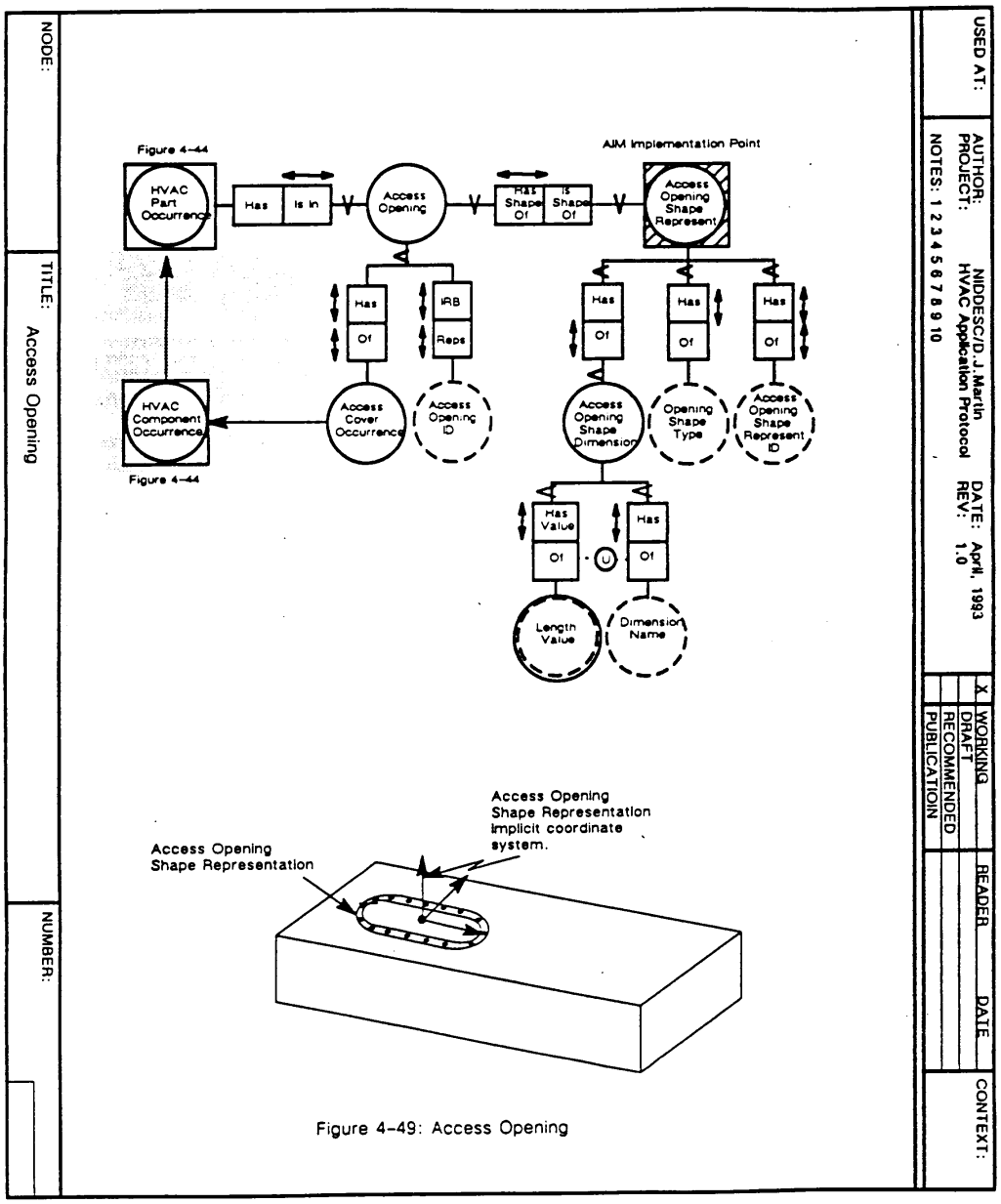

Figure F. 46 Access Opening

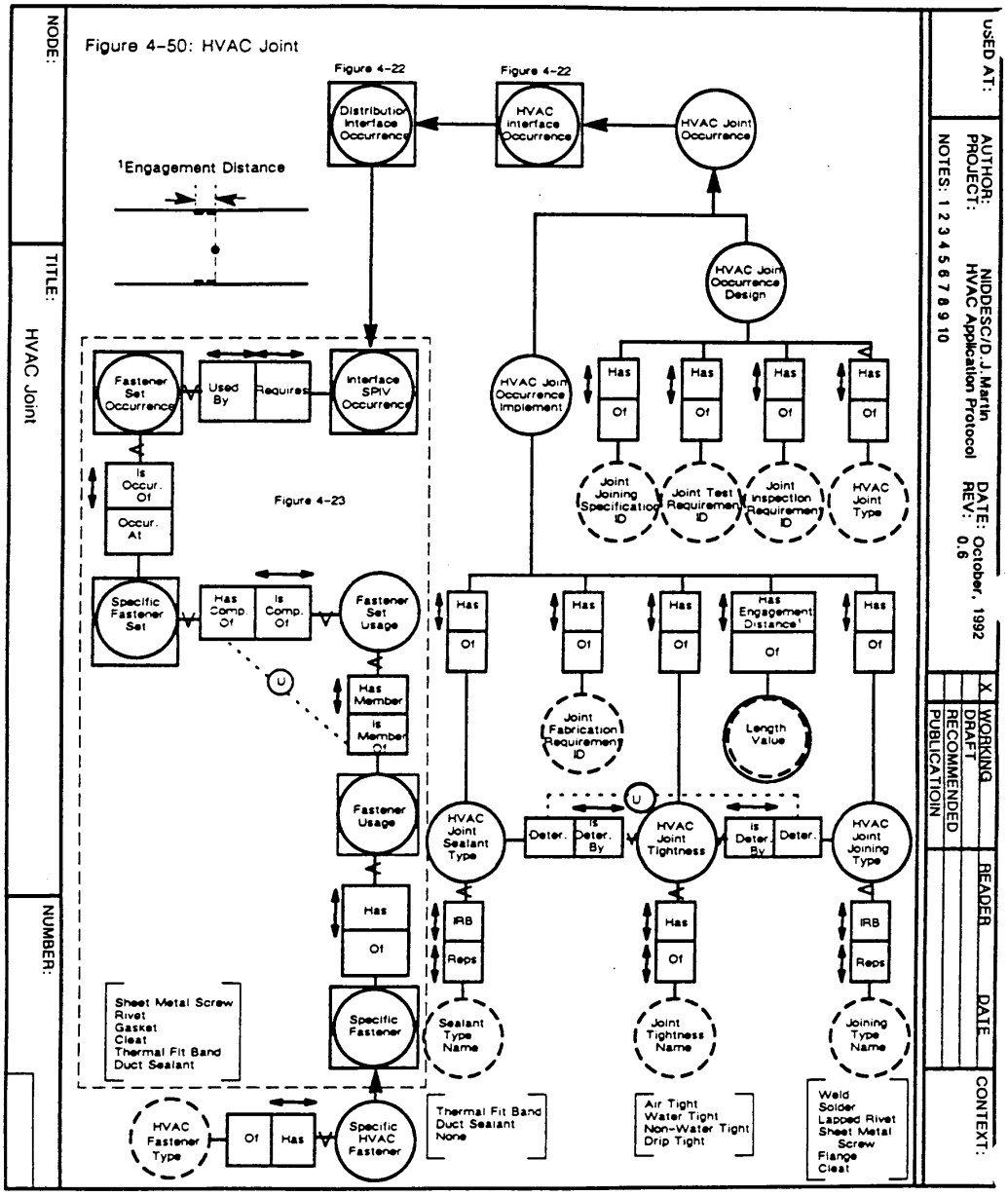

Figure F. 47 HVAC Joint

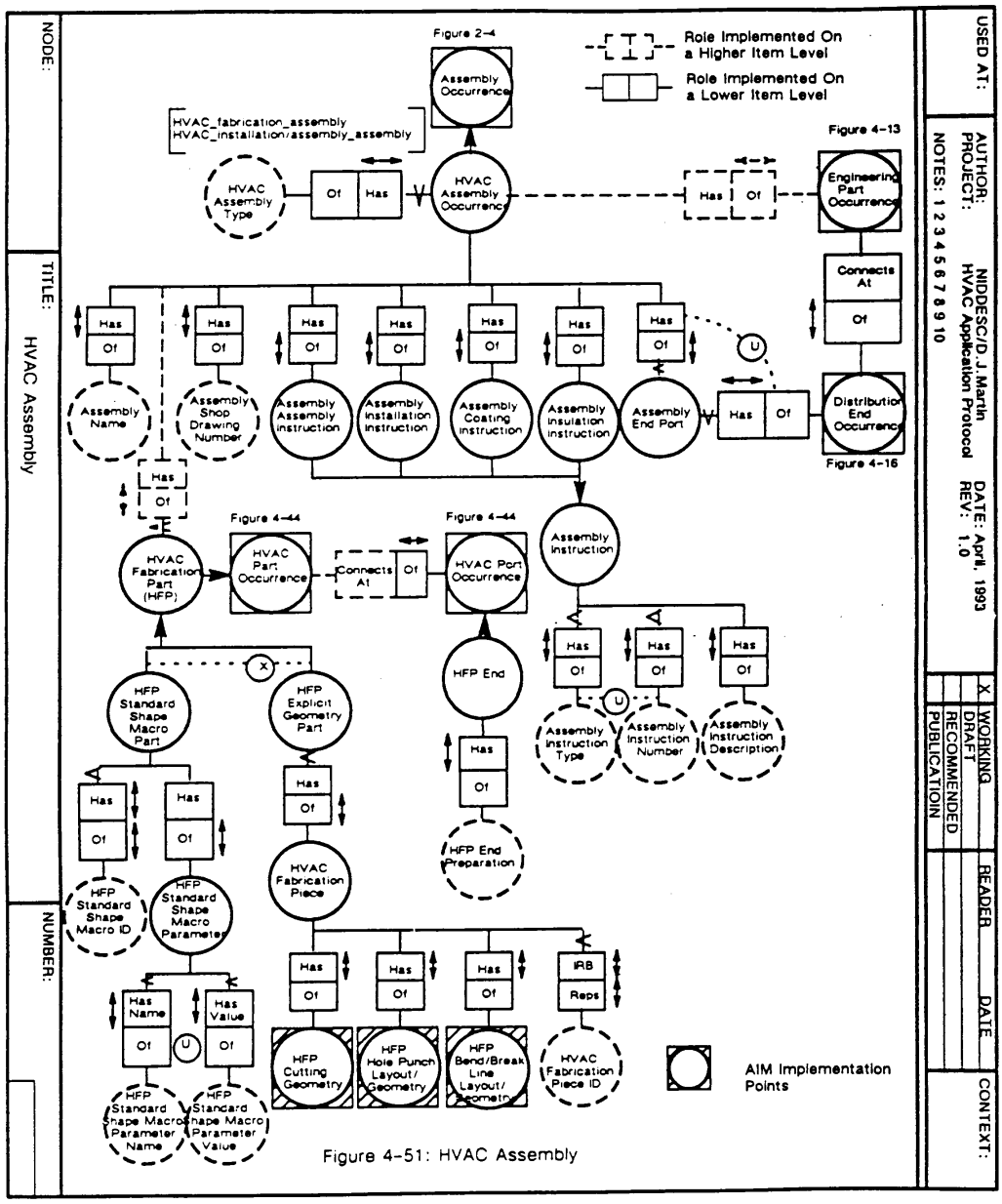

Figure F. 48 HVAC Assembly

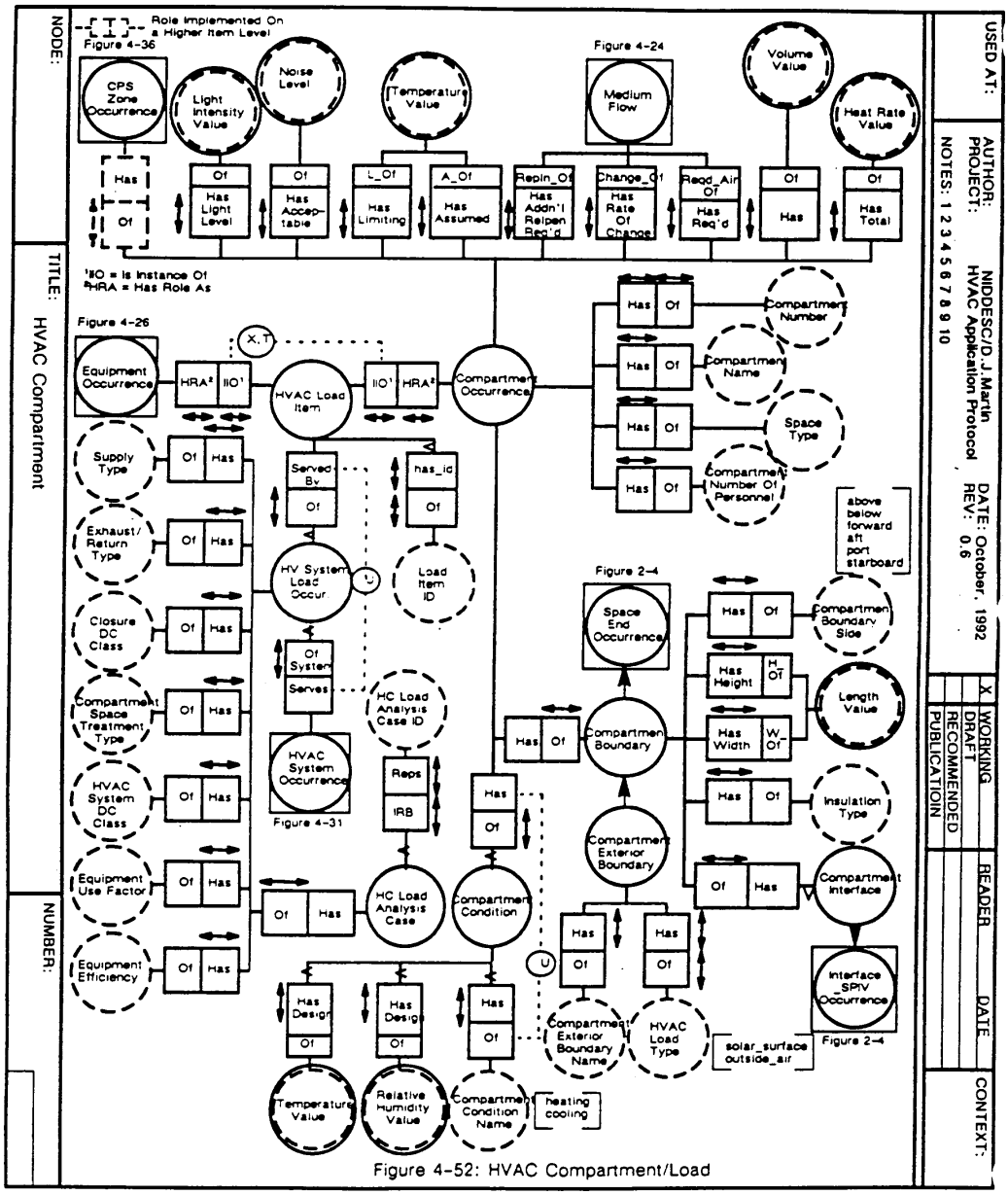

Figure 4-52: HVAC Compartment/Load

Figure F. 49 HVAC Compartment/Load

Distribution systems shape implementation

Principles

The following models describe the shape implementation for NIDDESC distribution system APs. This implementation makes use of ISO 10303 Parts 42 (Geometric and Topological Representations) and 43 (Representation Structures). The principal feature of the models is their use of Part 43's "representation" constructs to provide the geometric dependency relationships required by application entities.

— The distribution system entities requiring this geometric dependency functionality are:
— engineering parts - specific and occurrence
— distribution ends - specific and occurrence
— path nodes - specific and occurrence
— path arcs - specific and occurrence
— part envelopes - specific and occurrence
— distribution interconnections

The models use two types of geometric dependency, shape dependency and positional dependency. In these models, shape dependency is implemented via the **representation_replica** construct. A representation replica is simply the use of a set of geometry transferred to a location and orientation different from the one where it is defined. This construct is used extensively for the geometry of occurrence-type entities based on their specific-entities.

The second dependency, position, is implemented via the **representation_context_association** and **representation-relationship constructs.** A representation_context_association relates the *coordinate system* of an associated object to that of a base object through application of a transformation. Representation_relationship relates an associated *representation* (an item of geometry in a defined coordinate system) to its base representation. The coordinate system transformation used is that defined by the representation_context_association between the two objects: coordinate systems. (Representation_relationship provides for defining structures of representations, much as our SPIV_relationship does, and for keeping track of the positional dependencies of the objects in the structure.)

The following table shows the mail positional dependencies between entity types and should help in interpreting the models.

	sp_eng_part	eng_part_oc	sp_dst_end	dis_ end_oc	sp_pth_nd	pth_node	sp_pth_arc	path_ arc	sp_prt-env	prt_ env_oc	dst_int_oc
sp_eng_prt											
eng_part_oc											
sp_dst_end					X						
dst_end_oc						X					
ap_prh_nd							X				
path_node								X			
sp_pth_arc	X										
path_arc		X									
sp_prt_env	X										
prt_env_oc		X									
dst_int_oc											

Table 2 Positional Dependencies (entry's row entity is dependent on its column entity)

Shape dependency is, of course, based on the occurrence-to-specific relationship. The models, however, also provide the explicit definition of occurrence geometry. This feature is needed, for example, in the case of shaped pipe and is used exclusively for the shape of distribution_interconnection_occurrences (e.g. piperuns).

SHAPE ENTITIES USED

The distribution system entities and the shape entities defined in the EXPRESS model along with the geometric and/or topological entities to be used in their representation are listed below:

a) Engineering Parts
   Detail Shape-
      CSG_solid
      CSG_primitive
      Non-Manifold_Brep

   Diagram Shape-
      Geometric_3D_Curve_Set (NOTE: 3D is used to allow for modelling 3D diagrammatics.
      2D is accommodated as a special/default case.)

b) Path Arcs

   Detail and Diagram -
      Line
      Trimmed_curves (with the basis_curve being a circle)

c) Path Nodes

   Detail -
      Axis2_placement_3D (allows for rotational orientation of an end to be defined)

   Diagram
      Axis2_placement_2D (allows only for in-plane normal orientation to be described)

d) Distribution Ends

   Detail and Diagram -
      Geometric_3D_curve_Set

e) Distribution Interconnections

   Detail and Diagram -
      Shape is obtained exclusively from the associated Path Arcs

f) Part Envelopes

Detail only - Part envelopes are positionally dependent on a part's shape representation. Because of the structure of the models and the level where shape is defined (either diagram or detail), it is necessary to relate the envelope to a single reference shape representation. Detail is the logical choice.

CSG_solid
CSG_primitive
Non-Manifold_Brep

g) Attachment Configurations - “Style” (detail or diagram) - independent since attachment configurations don’t rely on another entity’s shape.

Face - A surface (unspecified type) may be associated via subtype face_surface.
Edge - A curve (unspecified type) may be associated via subtype edge_curve.
Vertex - A point (unspecified type) may be associated via subtype vertex_point.

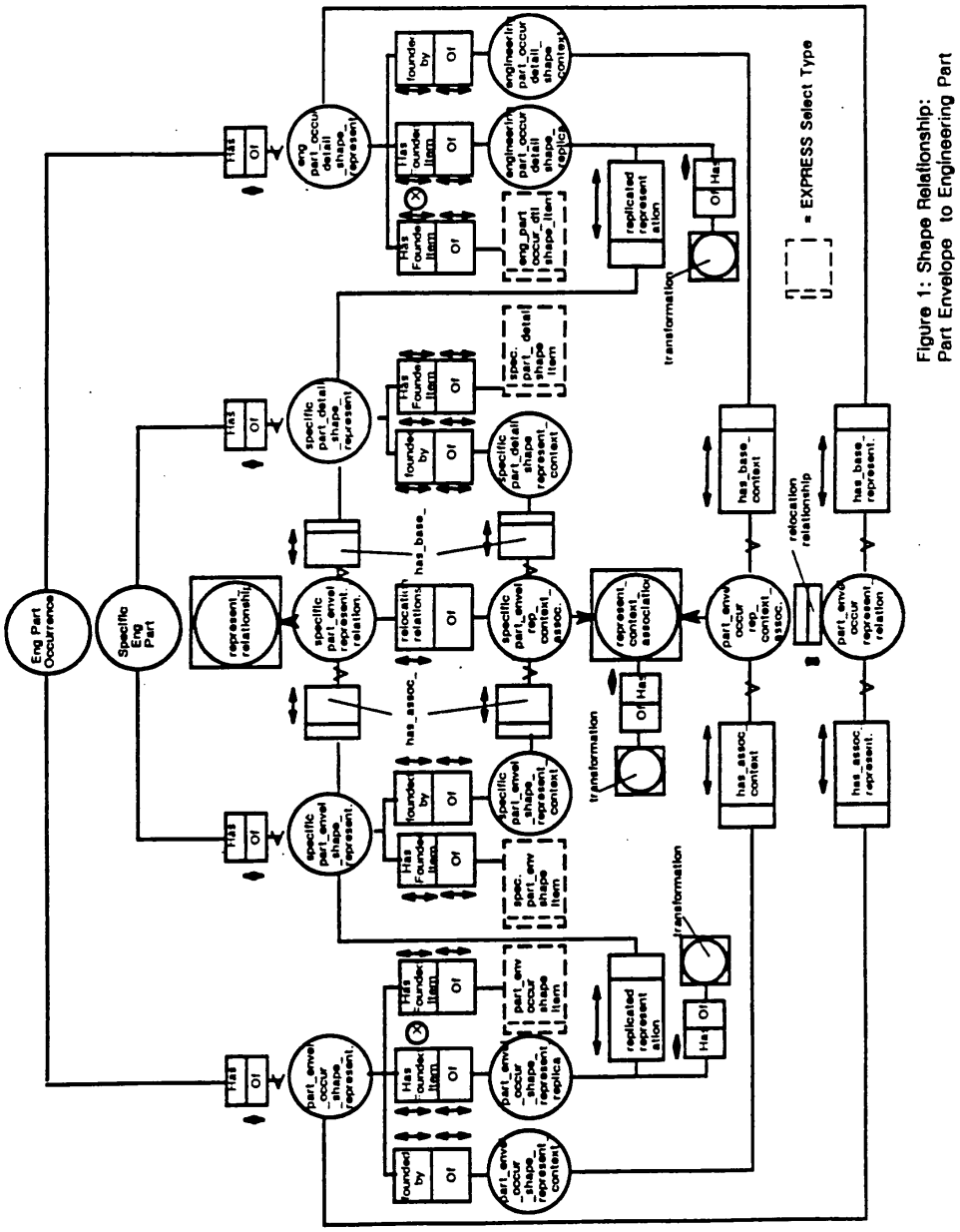

Figure 1: Shape Relationship:
Part Envelope to Engineering Part

Figure F. 50 Shape Relationship: Part Envelope to Engineering Part

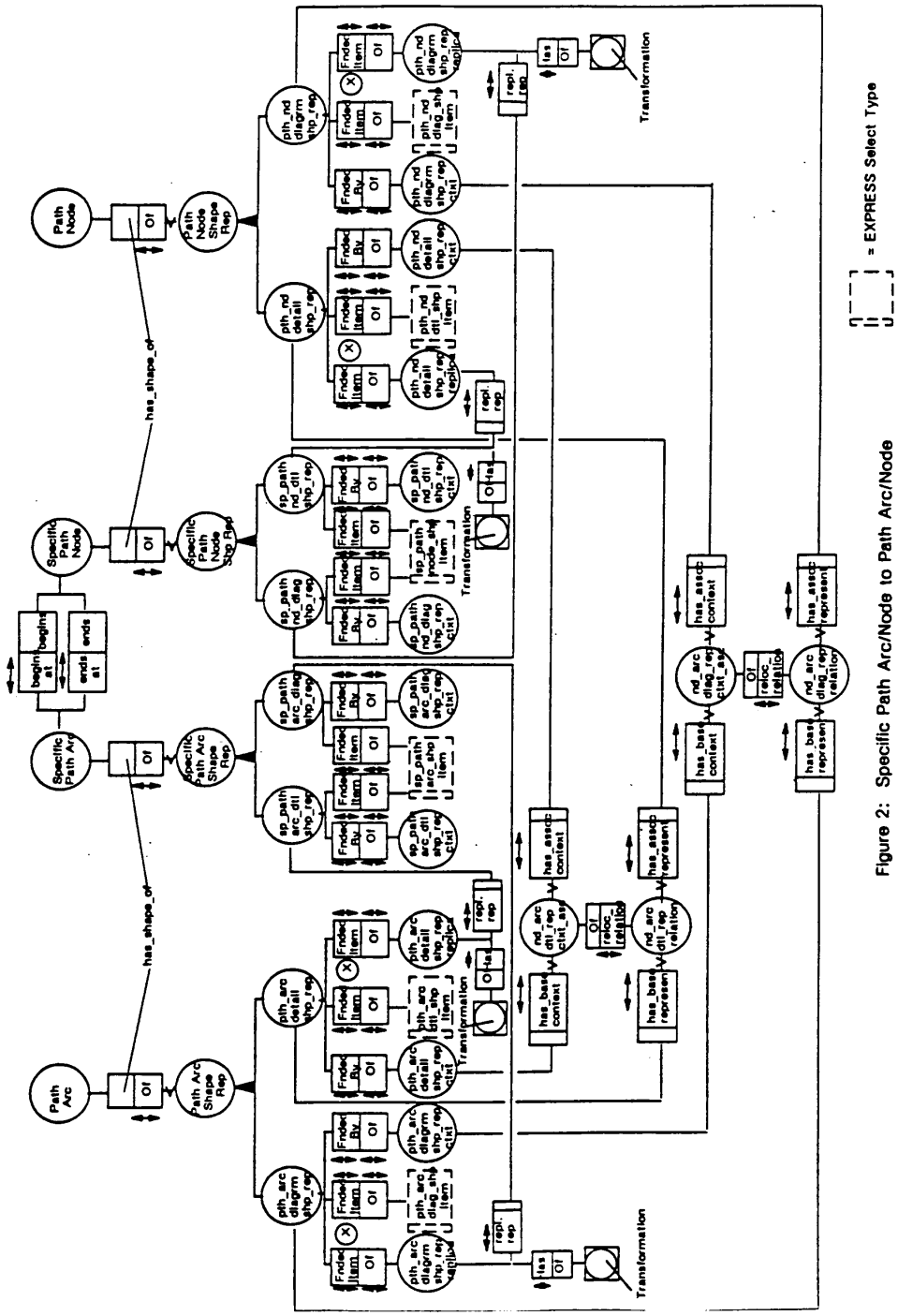

Figure 2: Specific Path Arc/Node to Path Arc/Node

Figure F. 51 Specific Path Arc/Node to Path Arc/Node

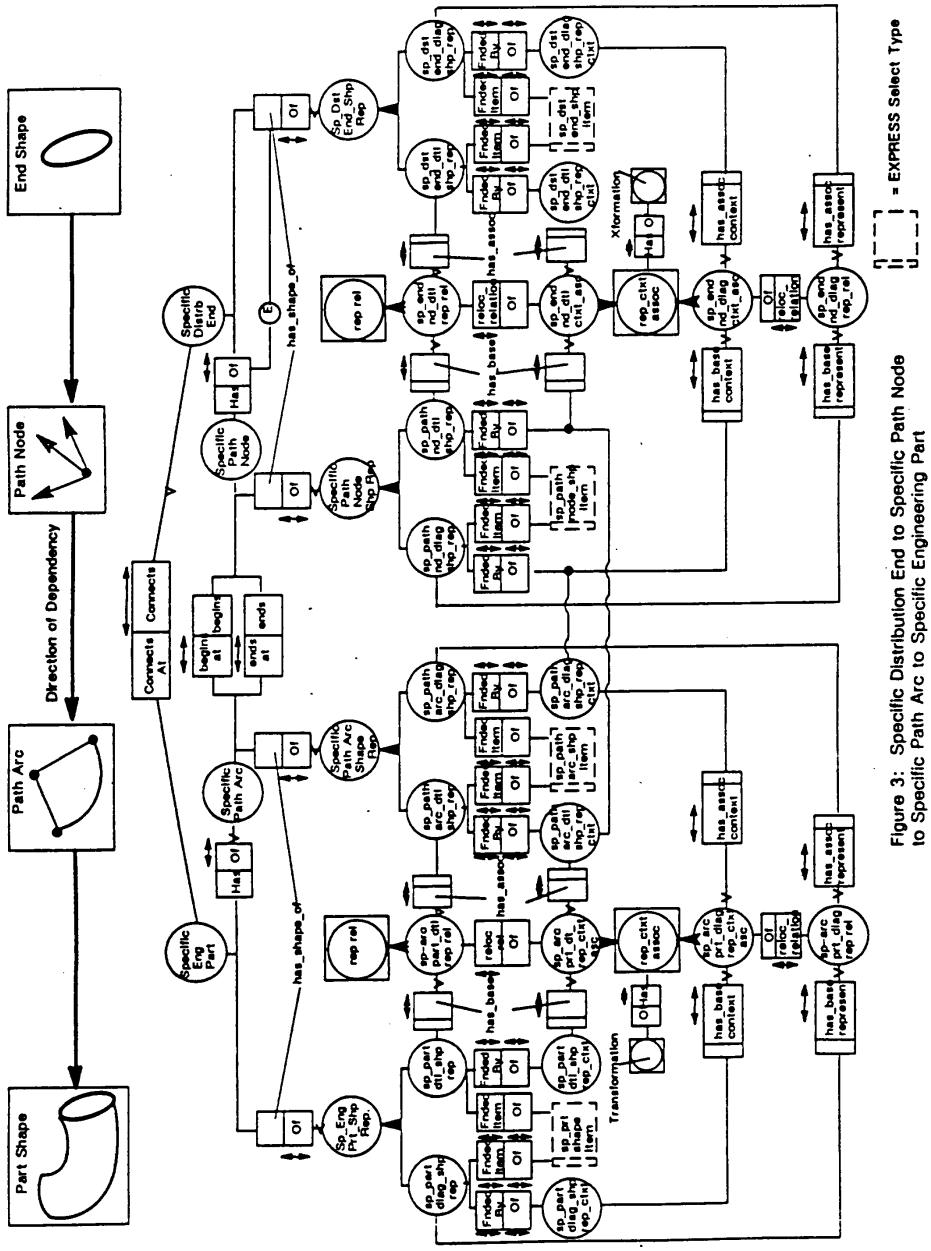

Figure 3: Specific Distribution End to Specific Path Node to Specific Path Arc to Specific Engineering Part

Figure F. 52 Specific Distribution End to Specific Path Node to Specific Path Arc to Specific Engineering Part

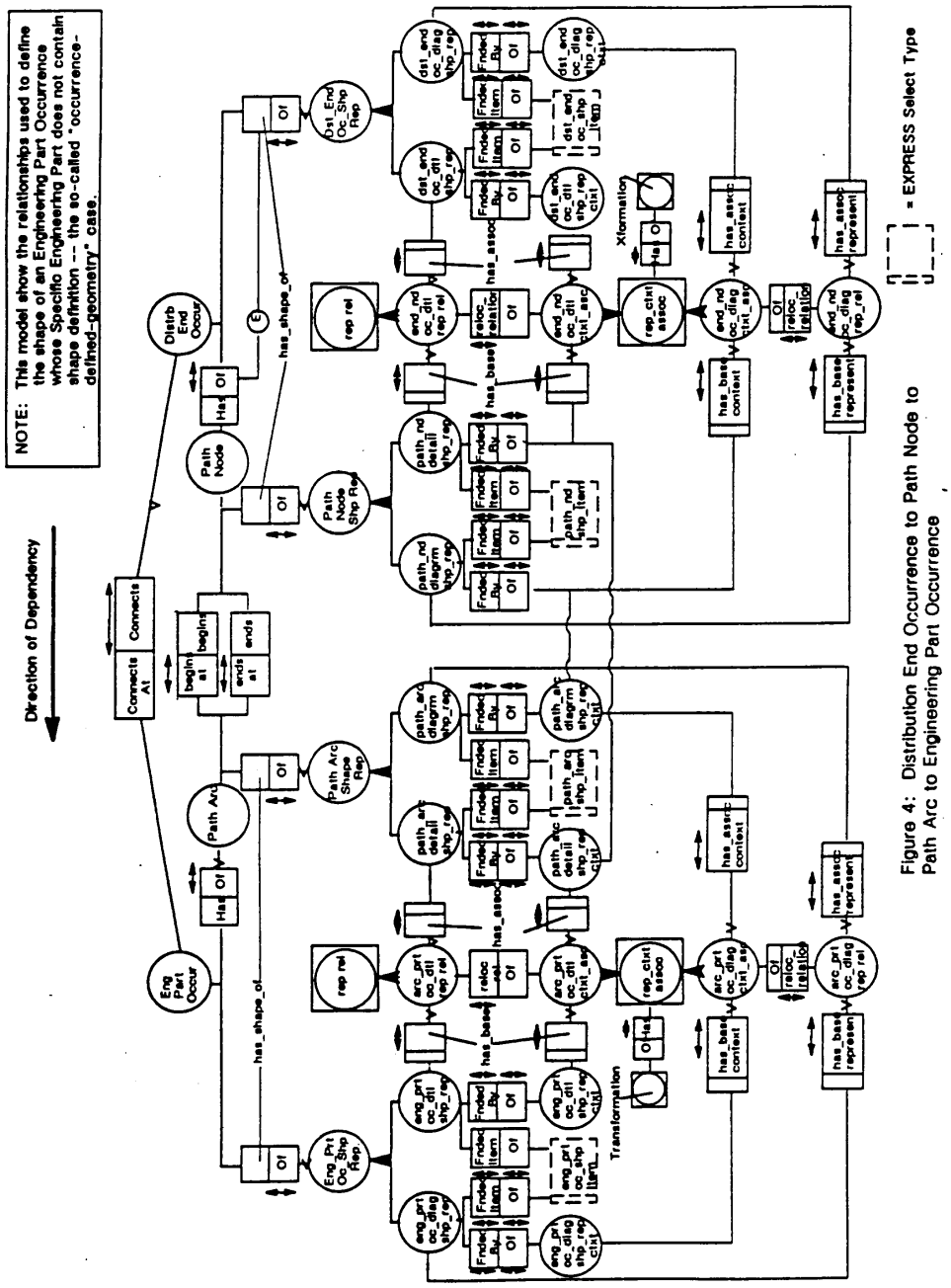

Figure 4: Distribution End Occurrence to Path Node to Path Arc to Engineering Part Occurrence

Figure F. 53 Distribution End Occurrence to Path Node to Path Arc to Engineering Part Occurrence

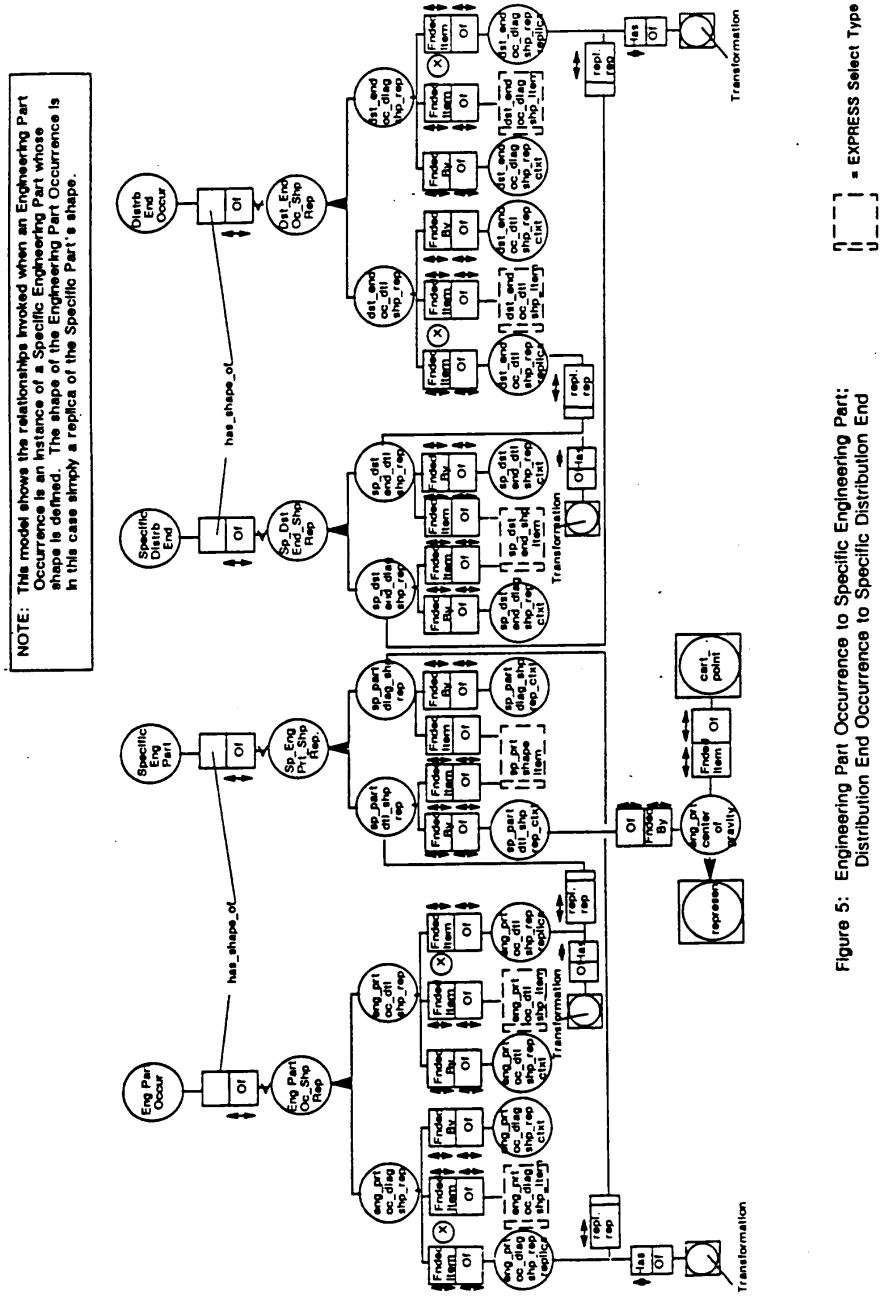

Figure 5: Engineering Part Occurrence to Specific Engineering Part; Distribution End Occurrence to Specific Distribution End

Figure F. 54 Engineering Part Occurrence to Specific Engineering Part; Distribution End Occurrence to Specific Distribution End

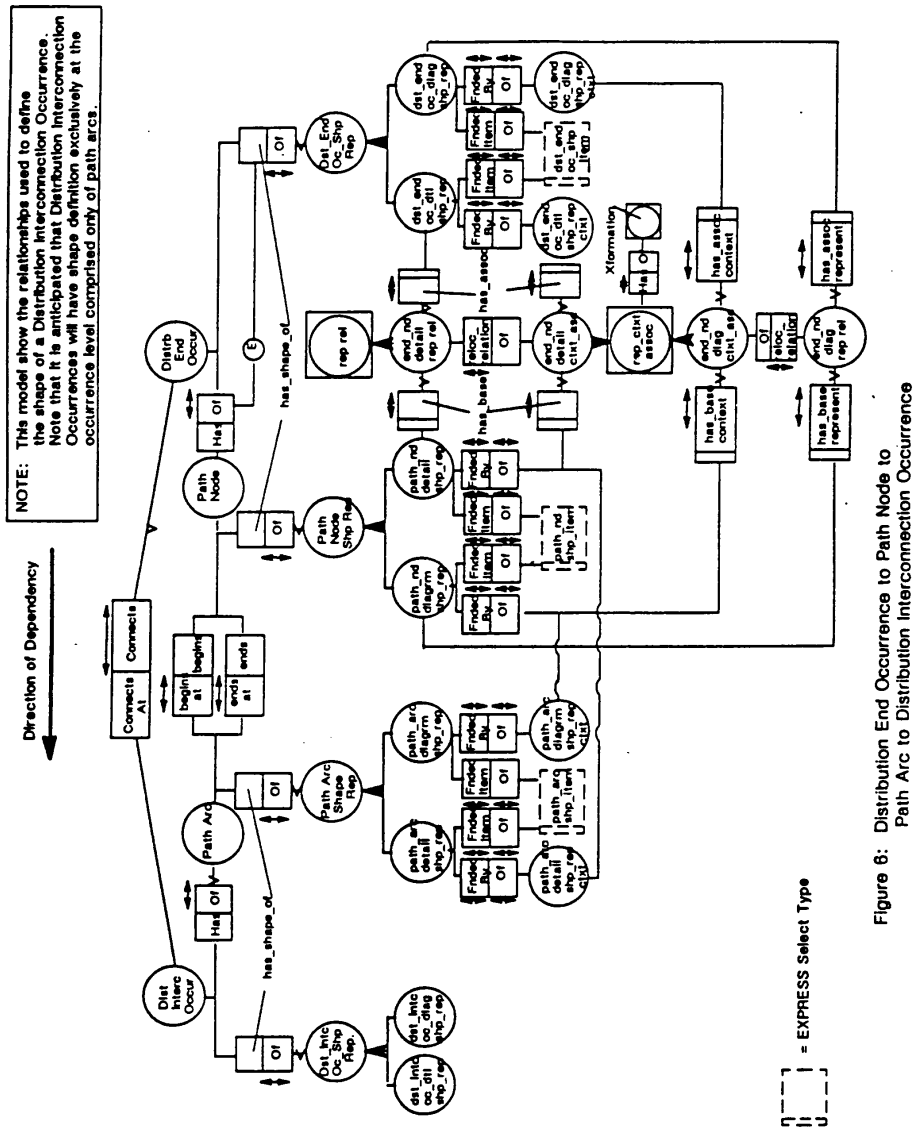

Figure 8: Distribution End Occurrence to Path Node to Path Arc to Distribution Interconnection Occurrence

Figure F. 55 Distribution End Occurrence to Path Node to Path Arc to Distribution Interconnection Occurrence

Annex G

(informative)

Annex H

(informative)

Annex J

(informative)

Bibliography

[1] Reference Model For Distribution Systems, Version 1.1, Douglas J. Martin and Rick Lovdahl, ISO TC184/SC4/WG1 Document 4.2.1, N443, December 22, 1989

[2] ISO DIS 10303-11, Product Data Representation and Exchange — Part 11: The EXPRESS Language Reference Manual, International Standards Organization, 31 August, 1992

[3] NIDDESC Library Parts Application Protocol,Version 0.5, Rick Lovdahl, 14 April, 1992

[4] HVAC Design Criteria Manual For AOE6, NAVSEA 802-5459428

[5] Instructions For Use Of HVAC Load Program ‘KL’', NASSCO Internal Document.

[6] Design Data Sheet DDS3801-2, Pressure Losses Of Ventilation Fittings, Dept. Of The Navy, 22 July 1950.

[7] “Design Data Sheet DDS3801-3, A Method For Determining The Size Of Ventilation Ducts”, Dept. Of The Navy, 18 January 1951

[8] Heating, Ventilation and Air Conditioning Equipment Manual, NAVSEA S9512-BS-MMA-010, 30 September 1985

[9] Duct Calc Spreadsheet Template, NASSCO Internal Document.

[10] Marine Engineering - Chapter XXI ‘Automation’, W.O. Nichols, The Society Of Naval Architects and Marine Engineers, New York, 1971

[11] Information System For HVAC Control System Design, Hongzheng Lu, IE 7425 Term Project, Lousiana State Unitversity, Fall 1990

[12] MIL-STD-1399C, Interface Standard For Shipboard Systems, 2 February 1988

[13] DOD-STD-1399 Section 204A, Ambient Air Conditions In Surface Ship Compartments, 26 August 1987

[14] Specifications For Building Fast Combat Support AOE-6, Section 512, February 1986

[15] Configuration Management Application Protocol, Version 2.0, Dan Wooley, April 1993