NSRP

SHIP

OUTFIT AND FURNISHINGS

APPLICATION PROTOCOL

Version 1.0

September 15, 1995

DISCLAIMER

These reports were prepared as an account of government-sponsored work. Neither the United States, nor the United States Navy, nor any person acting on behalf of the United States Navy (A) makes any warranty or representation, expressed or implied, with respect to the accuracy, completeness or usefulness of the information contained in this report/manual, or that the use of any information, apparatus, method, or process disclosed in this report may not infringe privately owned rights; or (B) assumes any liabilities with respect to the use of or for damages resulting from the use of any information, apparatus, method, or process disclosed in the report. As used in the above, "Persons acting on behalf of the United States Navy" includes any employee, contractor, or subcontractor to the contractor of the United States Navy to the extent that such employe, contractor, or subcontractor to the contractor prepares, handles, or distributes, or provides access to any information pursuant to his employment or contract or subcontract to the contractor with the United States Navy. ANY POSSIBLE IMPLIED WARRANTIES OF MERCHANTABILITY AND/OR FITNESS FOR PURPOSE ARE SPECIFICALLY DISCLAIMED.

ACKNOWLEDGEMENTS

The following individuals have contributed in a large measure to the content and quality of this current version of the NIDDESC Outfit and Furnishings Application Protocol:

Jack Brainin	David Taylor Research Center
Lisa V. Deeds	David Taylor Research Center
David J. Kinne	Bath Iron Works
Jeff Long, et. al.	Ingalls Shipbuilding
Rick Lovdahl	Lovdahl & Associates
Doug Martin	NASSCO
Jon Matthews	JJH Inc
Jim Murphy	NAVSEA 507
Mike Polini	Jonathon Corp.
Dr. Kent Reed	National Institute of Standards and Technology
Bill Schmidt	Angle, Inc.
Tom Santacapita, et. al.	Gibbs & Cox
Dave Williams, et. al.	Ingalls Shipbuilding
Dan Wooley	Newport News Shipbuilding & Dry Dock Co.

PRINCIPAL AUTHOR

Ronald W. Wood
Ingalls Shipbuilding
P.B. Box 149
Pascagoula, MS. 39568

(601) 935-3930
FAX (601)935-1019)

Table of Contents

ACKNOWLEDGEMENTS iii
Table of Contents iv
List of Tables vii
Foreword 1
Introduction 3
1. Scope 5
1.1 Contract/Functional Design 6
1.1.1 Component/Equipment Arrangement 6
1.1.2 O&F Test Definition 8
1.1.3 Connectivity Check 9
1.1.4 Graphic Presentation 10
1.2 Detail Design 10
1.2.1 Interference Analysis 10
1.2.2 Connectivity Check 10
1.2.3 Bills of Material 11
1.2.4 Graphic Representation 13
1.3 Production Engineering 14
1.3.1 O&F Fabrication Assembly Definition 14
1.3.2 O&F Installation/Assembly Assembly Definition 15
1.4 Support Engineering 16
1.5 Configuration Management 17
2. Normative References 19
3. Definitions and Abbreviations 21
3.1 Terms defined in ISO 10303-1 21
3.2 Other Terms 22
3.2.1 Application Protocols 22
3.2.2 Versioning and Configuration Management 23
3.2.3 Use of External Component Catalogs 23
3.2.4 Connectivity 23
3.2.5 External References 24
3.2.6 Product Structure 24
3.2.7 Customization 24
3.2.8 Structures Information - Subtyping 25
3.2.9 Item Identification 27
3.3 Symbols and Abbreviations 28
4. Informative Requirements 31
4.1 Units of Functionality 31
4.2 Application Objects 31
4.3 Application Assertions 53
5. Application Interpreted Model 55
5.1 ARM to AIM Mapping 55
5.2 AIM EXPRESS Short Form 55
6. Implementation and Conformance Testing Guidelines 123
6.1 Processor Conformance Requirements 123
6.2 NIDDESC O&F Application Protocol Test Groups 123
6.3 NIDDESC O&F Application Protocol Test Case Descriptions 124
6.3.1 TG-1: O&F System Structure 124

6.3.2 TG-2: O&F System Test 124
6.3.3 TG-3: Engineering Part Data 125
6.3.4 TG-4: Connectivity 127
6.3.5 TG-5: Attachments 128
6.3.6 TG-6: Insulation 129
6.3.7 TG-7: O&F Paths 129
6.3.8 TG-8: O&F Assembly 130
6.3.9 TG-9: O&F Joints 131
Annex A 133
Annex B 135
AIM Short Names 135
Annex C 145
Annex E 149
Application Activity Model 149
Annex F 157
Application Reference Model 157
F.1 Ship Product Item Reference Models 157
F.1.1 Ship Product Item Configuration Management 160
F.1.1.1 Purpose 160
F.1.1.2 Scope 160
F.1.1.3 Fundamental Concepts 160
F.1.1.4 Fundamental Requirements 163
F.1.1.5 Business Rules 165
F.1.1.6 NIAM Diagrams 168
F.2 External Reference Access Model 174
F.3. Engineering Systems Reference Models 179
F.4 O&F Reference Models 203
Annex G 229
AIM EXPRESS-G 229
Annex H 231
Application Protocol Usage Guide 231
Annex J 243
Technical Discussions 243
Annex K 244
Bibliography 244

Table of Figures

Figure E. 1 Specify, Design, Construct, and Maintain O&F 150
Figure E. 2 Design O&F System 151
Figure E. 3 Perform Contract O&F System Design 152
Figure E. 4 Perform Functional O&F System Design 153
Figure E. 5 Perform Detailed O&F Design 154
Figure E. 6 Perform O&F Production Engineering 155
Figure E. 7 Develop O&F System Support Information 156
Figure F. 1 O&F Top Level Subtype Examples 158
Figure F. 2 Ship Product Item 159
Figure F. 3 Promotion and Change Incorporation 169
Figure F. 4 Change and Change Alternatives 170
Figure F. 5 Configuration Approval 171
Figure F. 6 Hull Applicability 172
Figure F. 7 External Reference 173
Figure F. 8 Engineering System Taxonomy 176
Figure F. 9 Specific Engineering Part Taxonomy 177
Figure F. 10 Engineering Part Occurrence Taxonomy 178
Figure F. 11 O&F Systems Planning Model 180
Figure F. 12 Specific Engineering Parts 181
Figure F. 13 Specific Engineering Part Design 182
Figure F. 14 Specific Engineering Part Implementation 183
Figure F. 15 Specific Part Envelope Shape Representation 184
Figure F. 16 Specific Engineering Part Shape Rep 185
Figure F. 17 Specific O&F End 186
Figure F. 18 Specific Engineering Opening 187
Figure F. 19 Weight Condition 188
Figure F. 20 Engineering Part Occurrence 189
Figure F. 21 Specific Path Arc 190
Figure F. 22 Path Arc 191
Figure F. 23 O&F Ends 192
Figure F. 24 Attachment Occurrence 193
Figure F. 25 Attaching and Attached Objects 194
Figure F. 26 Insulation Model 195
Figure F. 27 Interface SPIV Occurrence Implementation 196
Figure F. 28 Specific Equipment 197
Figure F. 29 Specific Furnishing 198
Figure F. 30 Power 199
Figure F. 31 Equipment Occurrence 200
Figure F. 32 Equipment Operating Condition 201
Figure F. 33 Equipment Mounting Data 202
Figure F. 34 O&F System Model 204
Figure F. 35 O&F Interconnection Occurrence 205
Figure F. 36 O&F Test 206
Figure F. 37 Electrical Insullation Resistance Test Element 207
Figure F. 38 Operational Test Element 207
Figure F. 39 Compartment Tightness Test Element 208
Figure F. 40 Static Load/Drop Test Element 208

Figure F. 41 Soundness, Fit & Function Test Element 209
Figure F. 42 Strength and Soundness Test Element 209
Figure F. 43 O&F Joint 210
Figure F. 44 O&F Joint Occurrence Implementation 211
Figure F. 45 O&F Assembly 212
Figure F. 46 O&F Fabrication Part (OFP) 213
Figure F. 47 O&F Compartment 214
Figure F. 48 Protective Coat System Occurrence 215
Figure F. 49 Nonstructural Bulkhead System Occurrence 216
Figure F. 50 Ceiling System Occurrence 217
Figure F. 51 False Deck System 218
Figure F. 52 Inclined Ladder 219
Figure F. 53 Vertical Ladder 220
Figure F. 54 Climber Safety Rail 221
Figure F. 55 Portable Ladder 222
Figure F. 56 Accommodation Ladder 223
Figure F. 57 Deck Covering System Occurrence 224
Figure F. 58 Grating 225
Figure F. 59 Floor Plate 226
Figure F. 60 Handrail 227
Figure F. 61 Door Occurrence 228

List of Tables

Table 1 Conceptual Subtype Levels 26

Foreword

This future Part of ISO 10303 has been prepared by the Navy-Industry Digital Data Exchange Standards Committee (NIDDESC).

The need for reliable mechanisms for the exchange of data describing O&F products between dissimilar systems has been recognized as an important capability for several years by industry and government organizations. In particular the U.S. Navy has been very interested in acquiring this capability to support its acquisition and support of naval ships. As a result of this interest, the NIDDESC (Navy-Industry Digital Data Exchange Standards Committee) was formed in 1987 to pursue the development of this capability. Also, the IGES/PDES Organization (IPO) in the U.S. and the International Standards Organization's "Standard for the Exchange of Product Model Data" (ISO/STEP) groups have been pursuing the development of a single international standard for the representation of a wide range of product types.

NIDDESC has worked within the IPO/STEP Architecture, Engineering and Construction (AEC) Committee in developing the models of information employed in this AP. While this AP as written may be used to support the development of translators for other O&F domains, its objective is to support shipboard O&F. The ISO/STEP O&F AP will extend this specification to support non-ship O&F systems. It should be noted that while this application protocol has been developed in conjunction with the ISO/STEP AEC committee, and utilizes many STEP entities and constructs in its implementation, it is not a formally approved STEP AP.

This first revision of NSRP #0428 brings the Outfit and Furnishings application protocol into agreement with the ISO 10303 (STEP) Initial Release.

The following annexes are normative: A,B,C, and D.

The following annexes are informative: E,F,G,H,and J.

This Part is one in a series of Parts which together, when approved, will form the International Standard ISO 10303 - Industrial automation systems and integration - Product data representation and exchange. The other Parts are as follows:

— Part 1 Overview and Fundamental Principles;

— Part 11 Description Methods: The EXPRESS Language Reference Manual;

— Part 21 Implementation Methods: Clear Text Encoding of the Exchange Structure;

— Part 22 Implementation Methods: Standard Data Access Interface Specification;

— Part 31 Conformance Testing Methodology and Framework: General Concepts;

— Part 32 Conformance Testing Methodology and Framework: Requirements on Testing Laboratories and Clients;

— Part 41 Integrated Generic Resources: Fundamentals of Product Description and Support;

— Part 42 Integrated Generic Resources: Geometric and Topological Representation;

— Part 43 Integrated Generic Resources: Representation Structures;

— Part 44 Integrated Generic Resources: Product Structure Configuration;

— Part 45 Integrated Generic Resources: Materials;

— Part 46 Integrated Generic Resources: Visual Presentation;

— Part 47 Integrated Generic Resources: Shape Variation Tolerances;

— Part 101 Integrated Application Resources: Draughting;

— Part 201 Application Protocol: Explicit Draughting;

— Part 203 Application Protocol: Configuration Controlled Design;

— NSRP 0424 Application Protocol: NIDDESC Piping

— NSRP 0425 Application Protocol: NIDDESC Electrical Cableway

— NSRP 0426 Application Protocol: NIDDESC HVAC

— NSRP 0429 Application Protocol: NIDDESC Ship Structure

The reader may obtain information on the other Parts of ISO 10303 from the ISO Central Secretariat.

Introduction

ISO 10303 is an International Standard for the computer-interpretable representation and exchange of product data. The objective is to provide a neutral mechanism capable of describing product data throughout the life cycle of a product, independent from any particular system. The nature of this description makes it suitable not only for neutral file exchange, but also as a basis for implementing and sharing product databases and archiving.

This International Standard is organized as a series of parts, each published separately. The Parts of ISO 10303 fall into one of the following series: description methods, integrated resources, application protocols, abstract test suites, implementation methods, and conformance testing. The series is described in ISO 10303-1. This Part is a member of the application protocol series.

This Part specifies an application protocol (AP) for the exchange of Outfit and Furnishings systems and attached components/equipment information. The Application Protocol specifies the content and format of data describing Outfit and Furnishing (O&F) systems and attached components/equipment. This data is to be exchanged between dissimilar product definition systems for use in a defined set of applications. These applications apply to several stages of the life cycle of the O&F products defined.

The purpose of such a specification, or application protocol (AP), is to support the exchange of O&F product data between organizations with a common need for that data. These organizations include product owner and design agent, design agent and fabricator, design agent and operator, owner and maintenance organization, etc. Such exchange can only be realized after translation software has been developed based on this specification, to input (preprocess) and output (postprocess) the data. Translation software must be implemented on both systems between which data is to be exchanged. Its purpose is to convert data to and from the system's local representation to the neutral representation defined by this AP. This AP also serves to define tests of such translators that will validate certain aspects of their operation.

This application protocol defines the context, scope and information requirements for the exchange of Outfit and Furnishings and specifies the integrated resources necessary to satisfy these requirements. Application protocols provide the basis for developing implementations of ISO 10303. Additionally, this application protocol enumerates the conformance requirements.

Application protocols are the basis for developing abstract test suites for the conformance testing of implementations.

Clause 1 defines the scope of the application protocol and summarizes the functionality and data. An application activity model that is the basis for the definition of the scope is provided in Annex E. The information requirements of the application are specified in Clause 4 using terminology appropriate to the application. A graphical representation of the information requirements, referred to as the application reference model, is given in Annex F.

Resource constructs are interpreted to meet the information requirements. This interpretation produces the application interpreted model (AIM). This interpretation, given in Subclause 5.1, shows the correspondence between the information requirements and the AIM. The short listing of the AIM specifies the references to the integrated resources and is given in Subclause 5.2. The complete AIM EXPRESS listing is given in Annex {A or H}. A graphical representation of the AIM is given in Annex G. Additional requirements for specific implementation methods are given in Annex C.

1. Scope

NSRP 0428 specifies the use of the integrated resources necessary for the scope and information requirements for the design of Outfit and Furnishings systems.

Outfit and Furnishings (O&F) is composed of equipment, components and parts from the following categories:

a) Non-structural bulkheads
b) Ladders
c) Gratings
d) Furnishings
e) Insulation
f) Deck coverings
g) Protective coating
h) Hull fittings
i) Liferails, lifelines and safety nets
j) Doors, hatches, scuttles, and manhole covers
k) Air ports, fixed port lights, windows, and window wipers
l) Stowage, storerooms and workshops
m) Deck rigging.

O&F systems are a type of Engineering System which is itself a type of System. Much of the information pertinent to the O&F System apply to Engineering Systems. As such, it is represented at these higher (supertype) levels, as applicable, rather than at the O&F System level.

The scope of this AP is the exchange of computer-based product-based product data describing O&F systems and components. It defines a base of required data which supports a corresponding set of required O&F-related activities. These activities, and some unsupported but related activities, are depicted in Annex E.

This AP concerns itself with four major application areas which correspond to major stages of O&F product life cycle:

— Contract/Functional Design
— Detail Design
— Production Engineering
— Support Engineering

Users/Developers of O&F product information in these stages of product life cycle have different information requirements and views of the product. Users in the Contract Design stage view an O&F system principally as items in a general arrangement of equipment and components.

The Functional Design stage designers see O&F in much the same way but develop and use much more detailed information concerning location and material/component identification. The functional view is typically used to identify a preliminary Bill of Material in which purchase specification and long lead time equipment and components are identified.

Because of the commonality of the views in Contract and Functional Design stages, they have been combined for the purpose of this AP into a single application area.

Detail Design users have a 3-D, arrangements view of O&F. They are concerned with the arrangement in 3D space of O&F components which meet the applicable system specification, and in insuring that the arranged components are free from interferences with the surrounding environment. This view of the data is also the view that typically supports the final purchasing Bills of Materials.

Production Engineering stage users are concerned with defining O&F assemblies and the information needed to fabricate the pieces of these assemblies. This information can consist of cutting and forming instructions, joining instructions/specifications and coating instructions. They also specify the installation processes to be used to install such assemblies in the final product and the post-installation tasks to be carried out. The Production Engineering function creates and makes use of the production Bill of Material view.

The O&F product view taken by users in the Support Engineering stage is mainly that of the functional design except for defining the support requirements of the product. Such requirements include spare parts complements, maintenance procedures and related documentation, and operational specifications and documentation.

A more detailed view of the scope for the NIDDESC Outfit and Furnishings AP, in an $IDEF_0$ representation, may be found in Annex E, the Application Activity Model. In that model, the significant activities of Outfit and Furnishings have been examined and modeled. Annex E also provides a more in-depth discussion of the capabilities supported by this AP.

The following represents the scope of this AP and enumerates the particular applications within each of the previously defined four application areas the AP does support and to define the type of information required to provide that support.

In the Introduction, partitioning of attributes into sets called Application_definitions was described. It is assumed that this mechanism is used to support the transfer of the application data described in the following:

Note: All entities that are subtypes of Ship Production Item Version always carry a unique ID and a version number. Therefore, these attributes are not explicitly listed in the following, but are <u>always</u> associated with all SPIV's.

1.1 Contract/Functional Design

1.1.1 Component/Equipment Arrangement

This application identifies and locates the major components and equipment of the O&F System.

- Required Data
  - Equipment
    - Equipment Name
    - Manufacturer Drawing Number
    - Equipment Source
    - Equipment System Conformance Specification
    - Equipment Applicable Specification
      - Specification ID
    - Equipment Shock Qualification Status
    - Equipment Interchangeability
    - Engineering Part Location Description

- Equipment Input Power at Rated Condition
- Equipment Output Power
- Equipment Pressure Rating
- Equipment Rated Temperature
- Equipment Rated Capacity
- Equipment Design Temperature
- Equipment Operating Condition
    - Equipment Heat Dissipation to Air
    - Equipment Heat Dissipation to FW
    - Equipment Heat Dissipation to SW
    - Equipment Vibration Frequency
    - Equipment Vibration Amplitude
- Equipment Insulation Type
- Equipment Insulation Thickness
- Equipment Required Tests
    - Test ID
- Equipment Installation Instructions
    - Installation Instruction ID
- Equipment Safety Consideration Description
- Equipment Foundation Finish
- Equipment Alignment Flatness Tolerance
- Equipment Alignment Angularity Tolerance
- Equipment Mounting Data
    - Equipment Fixed Mount Data
        - Equipment Fixed Mount Type
        - Equipment Mounting Surface Thickness
        - Equipment Resilient Mount Data
            - Equipment Resilient Mount Specification
            - Equipment Inertia
            - Equipment Product of Inertia
            - Shock Movement Data
            - Equipment Shock Movement Magnitude

Compartment
- Compartment ID
- Compartment Name
- Compartment Location
- Compartment Orientation

Engineering Part
- Engineering Part Shape Representation
- Part Envelope
    - Part Envelope Shape Representation
    - Part Envelope Relative Location
    - Access/Maintenance Envelope
    - Shock Envelope
    - Insulation Envelope

Component Arrangement
- Access device
    - types
    - location

damage control classification
Bulkhead
types
tightness requirement

1.1.2 O&F Test Definition

The O&F Test Definition application requires O&F system and part information, and O&F system test requirements from the Contract Specification required by an activity responsible for defining the plan for testing.

Several types of test are performed on O&F systems and equipment. These include hydrostatic tightness tests, operational tests, drop tests.

The test plan is contained in a document termed a "Test Memo" (which also may be called a Test Procedure). The required information consists of the design information of the system, its operational state information, the characteristics of Devices in the system, the extent of the system, and potentially the various conditions of the test.

a) O&F System Insulation Resistance/Operational Components Test

This test is carried out to establish the proper functioning of various components of O&F systems.

Required Data
O&F Test
O&F Test Memo Title
O&F Test Memo Number
O&F Test Memo Revision
O&F Test Element
Engineering Part (part being tested)
Engineering Part
Engineering Part Name
Engineering Part Location Name

b) Compartment Tightness Test.

This test is carried out to determine hydrostatically test to the proof test pressure Water tight (WT), Oil tight (OT), and Air tight (AT) closures.

Required Data:
O&F Test
O&F Test Memo Title
O&F Test Memo Number
O&F Test Memo Revision
O&F Test Element
Engineering Part

c) Equipment/Component Static Load/Drop Test

This test is carried out to test components and equipment to satisfy strength requirements.

Required Data:

- O&F Test
  - O&F Test Memo Title
  - O&F Test Memo Number
  - O&F Test Memo Revision
  - O&F Test Element
    - Engineering Part
    - Load test weight requirement
    - Drop Height

d) Component/Equipment Soundness, Fit, and Function Test and Function Test

This test is carried out to test components and equipment soundness, fit and function.

Required Data:

- O&F Test
  - O&F Test Memo Title
  - O&F Test Memo Number
  - O&F Test Memo Revision
  - O&F Test Element
    - Engineering Part

e) Component Strength and Soundness Test

The purpose of this test is to test the strength and soundness of a components joint.

Required Data:

- O&F Test
  - O&F Test Memo Title
  - O&F Test Memo Number
  - O&F Test Memo Revision
  - O&F Test Element
    - Engineering Part

1.1.3 Connectivity Check

This application checks the connectedness of all O&F objects in a model to ensure that:

a) All Engineering Parts are connected to at least one other Engineering Part or Engineering Part external reference.

b) All O&F Sections' O&F Interconnect Ends that are not identified as "Free" are joined to an Engineering Part End via an O&F Interface.

c) The Types and, where specified, sizes of all O&F parts joined in an O&F Interface are compatible.

Required Data
- O&F End
  - O&F Cross Section
    - O&F End Cross section Type
    - O&F End Cross section width
    - O&F End Cross Section Height
  - O&F End Connection Status (Free/Joined)
- O&F Interface

1.1.4 Graphic Presentation

No graphic presentation application is directly supported by this AP for Contractual/Functional Stage O&F products. The ability to portray graphically the contract/functional designs in industry-standard forms is only supported when diagrammatic symbol type shape representations are modeled for the Engineering_Parts defined in a transfer data set applicable to this stage of definition.

1.2 Detail Design

1.2.1 Interference Analysis

This analysis performs checks for spacial conflicts between Engineering Parts arranged in 3D Space. To support this application, Engineering Parts and their associated Envelopes must be modeled as to allow the creation of solid or surfaced representations. The modeling of joints must be sufficiently clear that the interference analysis will not identify lap joints as causing interference.

Required Data
- Engineering Part
  - Engineering Part Shape Representation
  - Engineering Part Location
  - Engineering part Orientation
- O&F End
- O&F Joint
  - O&F Joint Type
- Part Envelope
  - Part Envelope Type
  - Part Envelope Shape Representation
  - Part Envelope Relative Location

1.2.2 Connectivity Check

This application's purpose is the same as that described in E.3.1.2 with the addition of position and alignment checking on all Interface Ends joined at O&F Joints.

a) All Engineering Parts having O&F Ends that are not designated as Free are connected to at least one other Engineering Part or Engineering Part External Reference via an O&F Interface.

b) All O&F Ends joined at an O&F Joint have consistent location and orientation.

Required Data

O&F End
- O&F End Location
- O&F End Orientation
- O&F End Connection Status (Free/Joined)

O&F Joint
- O&F Joint Type

1.2.3 Bills of Material

This application's purpose lists O&F entity descriptive data for procurement, design documentation, and interpretation of graphical presentations of a detailed O&F design. Custom lists can be defined via the Application Definition entity described in the Introduction.

Required Data

Engineering Part (all types)
- O&F System (containing)
- Engineering Part Description
- Engineering Part Specification
- Engineering Part Material
- Engineering Part Material Specification
- Engineering Part Originating Organization Part Number
- Engineering Part Weight
- Engineering Part Density
- Engineering Part Thickness/Gauge Value
- Engineering Part Thickness/Gauge Format
- Engineering Part Length Format
- Engineering Part Length Value
- Engineering Part Width Value
- Engineering Part Width Format
- Engineering Part Manufacturer Name
- Engineering Part Manufacturer Part Number
- NAVSEA Drawing Number
- Engineering Part Drawing Number Organization ID (CAGE)
- Engineering Part Organization Drawing Number
- Engineering Part Organization Drawing Find Number
- Allowance Parts List (APL) Number
- Engineering Part Quantity
- Engineering Part Specification
- Functional Group Code
- Engineering Part Service
- Engineering Part Location Description
- Engineering Part Required Shock Class
- O&F Parts
  - O&F Part Material Thickness/Gauge
  - Insulation
    - Insulation Type

- Thermal Coefficient
- Insulation Covering
  - Perforation Density
  - Perforation size

Protective Coating
- Number of Coats
- Coat ID
- Coverage Area
- Surface Preparation ID
- Formula Name
- Color

Nonstructural Bulkhead
- Type
  - Joiner
  - Expanded Metal
  - Partition
  - Light Traps
  - Curtain Plates
  - Secondary Sheathing
- Attaching Parts

Holes
- Purpose
- Location
- Geometry

Inclined Ladder
- Inclined Ladder Lug Type
- Ladder Angle with Deck
- Tread Location
- Tread Spacing
- Tread Width
- Shield Existence

Vertical Ladder
- Rung Quantity

Portable Ladder
- Portable Ladder Type
- Condition (Stowed or In-Use)
- In-Use Location Description
- In-Use Location
- In-Use Orientation
- Tread Width
- In-Use Center of Gravity
- Stowed Location Description
- Stowed Location
- Stowed Orientation
- Stowed Center of Gravity

Accommodation Ladder
- Part Name
- In-Use Part Location
- In-Use Part Orientation
- Tread Quantity

- Tread Width
- In-use Part Center of Gravity
- In-Use Location Description
- Stowed Location Description
- Stowed Location
- Stowed Orientation
- Stowed Center of Gravity
- Deck Covering
  - Layer Quantity
  - Layer ID
  - Coverage Area
  - Surface Preparation
  - Additive Information (Chips, strips)
  - Grade
  - Color
  - Formula Name
  - Code ID
- Handrail System
  - Type
- Ceiling System
  - Attaching Parts
- False Deck System
  - Attaching Parts

Devices

- Equipment
  - Furnishings
    - Lock Type
    - Modular Component Quantity
    - Surface Finish
      - Color
      - Location ID
  - Access Devices
    - Gratings
      - Type
      - Distance Between Cross Bars
      - Distance Between Bearing Bars
    - Supporting Structure
  - Floor Plate
    - Type (Hinged or Portable)
  - Windows

1.2.4 Graphic Representation

This application's purpose is to generate a graphic representation of the 3-D geometry representation of the O&F objects (Engineering Parts and potentially Envelopes) contained in a transfer set. This AP does not support the exchange of engineering drawings per se. However, this 3-D geometry presentation could be used by a receiver to prepare a detailed O&F arrangements drawing.

<u>Required Data</u>

Engineering Part
- Engineering Part Shape Representation
- Engineering Part Location
- Engineering Part Orientation

Envelope
- Part Envelope Type
- Part Envelope Shape Representation
- Part Envelope Relative Location
- Part Envelope Relative Orientation

1.3 Production Engineering

1.3.1 O&F Fabrication Assembly Definition

This application is carried out on Detailed Design O&F in preparation for O&F fabrication. The application involves:

a) Specifying the extent of O&F Fabrication Assemblies by their bounding O&F Ends.

b) Specifying the assemblies individual O&F Fabrication Parts and defining for each:

— Shear cut length

— Standard shape fabrication macro ID and fabrication macro parameters or, for each of its fabricated pieces

— Flat pattern cutting geometry

— Flat pattern hole punch layout/geometry

— Flat pattern bending/break line layout/geometry

c) Specifying the assembly's coating instructions

d) Specifying joint fabrication instructions

e) Specifying the Joint testing and inspection requirements for Joints in the assembly.

f) Specifying insulation requirements, if any, for thermal or acoustic insulation.

g) Listing the assembly's O&F Component and stock material quantities.

h) Produce a shop drawing of the assembly. Note: transfer of such drawings is not directly supported by this AP.

<u>Required Data</u>

O&F System
- O&F System Specification

O&F Joints
- Joint Type

- Joining Specification
- Fastener Set
  - O&F Fastener Type
  - Engineering Part Material Specification
  - Fastener Quantity Required
- O&F Fabrication Assembly
  - Assembly Name
  - Assembly Ends (extent of assembly)
  - Assembly Internal Interface Points
  - Assembly Weight
  - Assembly Center of Gravity
  - O&F Fabrication Part
    - Engineering Part Shape Representation
    - Engineering Part Location
    - Engineering Part Orientation
    - Engineering Part Material
    - Engineering Part Material Specification
    - O&F Standard Shape Macro ID
      - O&F Standard Shape Macro Parameter Name
      - O&F Standard Shape Macro Parameter Value
  - O&F Fabrication Piece
    - O&F Fabrication Piece ID
    - O&F Fabrication Piece Cutting Geometry
    - O&F Fabrication Piece Hole Punch Layout/Geometry
    - O&F Fabrication Piece Bend/Break Line Layout/Geometry

1.3.2 O&F Installation/Assembly Assembly Definition

This application supports the definition of assemblies and the supporting documentation necessary to assemble or install them. These assemblies are distinguished from O&F Fabrication Assemblies in that they are not concerned with the fabrication of O&F Assemblies. They are likely to contain O&F Fabrication Assemblies in their product structure whereas O&F Fabrication Assemblies contain only O&F Parts in their product structure. This application involves:

a) Specifying the extent of the O&F Assemblies by their bounding O&F Ends

b) Specifying the support/foundation requirements of the assembly as a whole or of individual Engineering Parts in the assembly

c) Specifying the assembly's coating instructions based on its System Specification and location in the ship.

d) Specifying assembly joint fabrication instructions based on the System Specification and location in the ship.

e) Specifying the joint testing and inspection requirements for Joints in the assembly

f) Listing the assembly's O&F component and O&F material quantities.

g) Producing an assembly/installation drawing of the assembly. Note: Transfer of such drawings is not directly supported by this AP.

Required Data

- O&F Assembly
  - Assembly Name
  - Assembly Type
  - Assembly Ends (extent of assembly)
  - Assembly Assembly instructions
  - Assembly Installation Instructions
  - Assembly Coating Instructions
  - Assembly Insulation Instructions
  - Assembly Weight
  - Assembly Center of Gravity
- Engineering Part
  - Engineering Part Name
  - Engineering Part Material
  - Engineering Part Material Specification
  - Engineering Part Originating Organization Part Number
  - Engineering Part Weight
  - Engineering Part Center of Gravity
  - Insulation Parts
    - Material
    - Total Part Insulation Thickness
- O&F Joints
  - Joint Type
  - Joining Specification
  - Fastener Set
    - O&F Fastener Type
    - Engineering Part Material Specification
    - Fastener Quantity Required

1.4 Support Engineering

This application's purpose is to enable users of O&F product model data defined by this AP to define and use reference keys describing product model entities, which can be used to access external databases and documentation describing the same products. Examples of such external data include:

The ROMIS (Real-time Outfitting Management Information System) database

The SCLSS (Ship Configuration Logistics Support System) database

The Ship's Information Book (SIB)

System Operating Manuals

Equipment Maintenance Manuals

Required Data

- Engineering Part
  - Functional Group Code (FGC, etc)
  - Allowance Parts List Number (APL)
  - Manufacturer Name
  - Manufacturer Part Number
  - Manufacturer Drawing Number
  - NAVSEA Drawing number
  - MIL-STD-Number
  - Federal Stock Number
  - Maintenance Worthy Flag
- Engineering System
  - Functional Identifier (ESWBS, etc)
  - NAVSEA Drawing Number

1.5 Configuration Management

This application's purpose is to identify the configuration of the current or any earlier version of a collection of Ship Product Items, and to be able to trace the changes made to any given SPI once (one of) its owning Configuration SPI's has been issued. This requires that the change history of each Ship Product Item that is contained in an "issued" Configuration SPI, be available to users.

Required Data:

- Ship Product Item Version (SPIV)
  - Version
  - Creation/Modification/Deletion (change) Event
    - Date/Time Created/Modified/Deleted
    - Person/Organization performing the change event
    - Person/Organization checking the change event
    - Event Description and Type
- Promotion Event
  - Promotion Level (i.e. "working", "preliminary", or "issued")
  - SPIV promoted
  - Date/Time promoted
- Configuration SPIV
  - Configuration SPIV Revision Name
  - "Incorporates" Change Revision
  - Context of Approval Relationship
  - Person/Organization "owning"
- SPIV Relationship (product structure)
  - SPIV Relationship Type
  - Component SPIV
  - Context SPIV
  - SPIV Relationship Context
- Approval Relationship
  - Date/Time assigned
  - Status
- Change
  - Organization Change IDs
  - Change Type

- Change Type
- Change Status
- "Incorporated In" Change Revision
- Implementing Creation/Modification/Deletion Events
  - Baseline SPIV
  - Created/Modified Deleted SPIV
- Possible Change Alternatives
- Chosen Change Alternative

Change Alternative

- Estimated Cost
- SPIV's impacted

2. Normative References

The following standards contain provisions which, through reference in this text, constitute provisions of this Standard. At the time of publication, the editions indicated were valid. All standards are subject to revision and parties to agreements based on this Standard are encouraged to investigate the possibility of applying the most recent editions of the standards indicated below. Members of the IEC and ISO maintain registers of currently valid International Standards.

ISO DIS/10303-1	Industrial Automation Systems and Integration Product Data Representation and Exchange - Part 1: Overview and Fundamental Principles.
ISO DIS/10303-11	Industrial Automation Systems and Integration Product Data Representation and Exchange - Part 11: Description Methods: The EXPRESS Language Reference Manual.
ISO DIS/10303-21	Industrial Automation Systems and Integration Product Data Representation and Exchange - Part 21: Implementation Methods: Clear Text Encoding of the Exchange Structure.
ISO CD/10303-22	Industrial Automation Systems and Integration Product Data Representation and Exchange - Part 22: Implementation Methods: Standard Data Access Interface Specification.
ISO DIS/10303-31	Industrial Automation Systems and Integration Product Data Representation and Exchange - Part 31: Conformance Testing Methodology and Framework: Requirements on Testing Laboratories and Clients.
ISO CD/10303-32	Industrial Automation Systems and Integration Product Data Representation and Exchange - Part 32: Conformance Testing Methodology and Framework: General Concepts.
ISO DIS/10303-41	Industrial Automation Systems and Integration Product Data Representation and Exchange - Part 41: Integrated Generic Resources: Fundamentals of Product Description and Support.
ISO DIS/10303-42	Industrial Automation Systems and Integration Product Data Representation and Exchange - Part 42: Integrated Generic Resources: Geometric and Topological Representation.
ISO DIS/10303-43	Industrial Automation Systems and Integration Product Data Representation and Exchange - Part 43: Integrated Generic Resources: Representation Structures.
ISO DIS/10303-44	Industrial Automation Systems and Integration Product Data Representation and Exchange - Part 44: Integrated Generic Resources: Product Structure Configuration.
ISO 10303-45	Industrial Automation Systems and Integration - Product Data Representation and Exchange - Part 45: Integrated Generic Resources: Material.
ISO DIS/10303-46	Industrial Automation Systems and Integration - Product Data Representation and

	Exchange - Part 46: Integrated Generic Resources: Visual Presentation.
ISO 10303-47	Industrial Automation Systems and Integration - Product Data Representation and Exchange - Part 47: Integrated Generic Resources: Shape Variation Tolerances.
NSRP 0424	Application Protocol: NIDDESC Piping.
NSRP 0425	Application Protocol: NIDDESC Electrical Cableway.
NSRP 0426	Application Protocol: NIDDESC HVAC.
NSRP 0429	Application Protocol: NIDDESC Ship Structure.

3. Definitions and Abbreviations

3.1 Terms defined in ISO 10303-1

NSRP 0428 makes use of the following terms defined in ISO 10303-1:

— abstract test suite;

— application;

— application activity model (AAM);

— application interpreted model (AIM);

— application protocol (AP);

— application reference model (ARM);

— component;

— conformance testing;

— context;

— data;

— implementation method;

— information;

— integrated resource;

— product data;

— resource construct;

3.2 Other Terms

The following definitions apply to this application protocol:

3.2.1 Application Protocols

Application protocols are specifications of the information content and format. They also contain conventions and rules that govern the use of that information within specific applications, or end uses of the information, for a well-defined subject area or domain. This application protocol's domain is O&F products as found in large, engineered products such as ships, and chemical and power generating plants.

The five major elements of an application protocol are:

1) a scope and requirements statement,

2) an application reference model (ARM) of the supported information,

3) an application interpreted model (AIM) that specifies how the information is mapped into a specification such as STEP,

4) an AP format specification with a usage guide, and

5) conformance requirement and test cases.

The scope and requirement statement define the target applications which are supported by the AP. For each application, information requirements are defined. These requirements are expressed at a high level in terms of the objects, relationships between objects and categories of data describing these objects and relationships. This information is contained in Section 3 and Annex E..

The information content supporting the applications enumerated in the scope and requirements statement is formally defined in the ARM. The ARM is an information model that documents the information structures supporting the subject applications, and provides the baseline from which candidate interpreted models are developed. For this AP, the ARM is presented in two forms: a NIAM (Nijssen Information Analysis Methodology) (graphical) model, and an EXPRESS textual model. (Appendix H contains a guide to reading NIAM diagrams. EXPRESS is defined in [1].)

This ARM has been interpreted in terms of:

— a pool of both STEP entities where they exist and are thought to be stable, and

— non-STEP entities, to create the AIM

Non-STEP entities have been used in situations where:

— no STEP entity exists that provide the desired functionality, and

— available STEP entities are considered as yet unstable.

3.2.2 Versioning and Configuration Management

The building block of the models used by this AP is the Ship_Product_Item, an abstract entity which is further specified through the definition of its subtypes (see Section 3.2.8). Each Ship_Product_Item is versioned. That is, as an SPI undergoes modifications, unique versions of it are created and stored in a list of versions which serves as a historical record of the SPI. A version of an SPI can be created in response to any change in the item, but need not be, except in the following cases:

The purpose of a Configuration_SPI is to serve the same configuration accounting function served manually by physical documents, particularly drawings. In a manual system, a drawing (at a particular revision) defines the configuration of most of the objects depicted on that drawing. (Some of the objects depicted, such as standard details or arrangement backgrounds are controlled on other drawings.) Configuration_SPIs provide this same functionality for the entities they aggregate.

An equally important feature of configuration status accounting is the specification of Approval status to each SPI version in the context of its controlling Configuration_SPIV. This facility allows entities declared to be "unapproved" to be identified and potentially given specialized treatment. The use of this attribute can provide the same functionality as the use of "hold-ups" or "reservations" on physical drawings, which indicates that portions of the drawing should not be used or used only with caution.

The data structures which support this process of "promoting" an SPI from one version to another, as well as tracking the status of revisions to SPI's, are documented in Annex F.

3.2.3 Use of External Component Catalogs

A key feature of this AP is its reliance on the availability of component catalogs that are external to the transfer dataset. Entries in these catalogs carry the majority of component descriptive information including the specification of component geometric representation. An occurrence of a component contained in the transfer data set described by this AP will almost exclusively refer or point to an external catalog entry for its definition.

Thus, such catalogs must be available on both the sending and receiving site systems for the transfer to be effective. A separate AP (NIDDESC Library Parts Application Protocol, [3]) specifies the content and format of component catalog data exchanges.

3.2.4 Connectivity

A key feature of O&F is the connectivity of components of the product. In general, connectivity between O&F objects is established by defining a relationship between the O&F_Ends of connecting objects and an O&F_Interface.

A second type of general connectivity used throughout applications is the Attachment. An Attachment defines a joining of an Attached/Penetrating_Object, such as an Engineering_Part or an O&F_Section with an

Attaching_Penetrated_Object at their Attachment_Ends. Attachment_Ends are not used in establishing network connectivity.

3.2.5 External References

Transfers of product model data usually involve references to objects not present in the transferred model. Three types of such references must be handled by this AP.

The first type of such external reference is from an internal occurrence of an Engineering Part to an external catalog of such parts which contain the geometry and other data describing the part (see Section 3.2.3). In this case, the referencing part (occurrence) must carry sufficient information to allow the geometry of the part to be created at the same location and orientation in the receivers model that it had in the sender's, while maintaining it's connectivity to adjoining parts.

The second type external reference is from an internal occurrence of an Engineering Part, O&F Interconnection (e.g., O&F Section) or Engineering System to another such object (or Space) with which it is topologically or spatially related, but is not present in the transferred model. It is also not defined in a catalog. Examples of this situation include a connection between a nonstructural bulkhead and a piece of structure and between an equipment and the compartment in which it is located. The referenced object may or may have been received by the receiver previously. It therefore may or may not be available when the model is received. In this situation, the referencing object must preserve the ability to correctly identify and, if required, locate its connection with the referenced object until such time as the referenced object is integrated with the referencing object's database.

The third external reference type is a logical reference to an object that is not a product model object. Examples of such referenced objects include all types of physical documentation including drawings, specification, and publications (e.g., training manuals or operating guides). This reference type facilitates both the use of automated interfaces to other information systems at the receiving site, and manual cross referencing.

3.2.6 Product Structure

A key requirement of this AP is the ability to pass O&F data describing various levels of hierarchy of the O&F model objects. This facility is use to model the decomposition of a high level object, such as an Engineering_Systems, into lower level Engineering_Systems and their constituent Engineering_Parts and O&F_Interconnections. Configuration_SPI, discussed in section 3.2, is also a type of product structure object as is Assembly. The SPIV_Relationship provides for all Ship_Product_Item_Versions to be structured via several different product structures and, similarly, to be members of many product structured items.

Similar to the situation, described in Section 3.2.5, the object in a product structure may connect with items in another product structure which is not present in the product model transferred. This situation is identical to the second type of external reference, described in Section 3.2.5, and must be handled in like fashion.

3.2.7 Customization

This AP must support User-Defined Attributes. The reference models support not only this concept but User-Defined Application Definitions such that customized sets of attributes can be defined. To further extend the usefulness of this capability, a User-Defined Collection has been defined which can model arbitrary Collections of SPIV's. This entity when used in association with the User-Defined Application Definition can facilitate the composition and exchange of specialized lists. for example, a list of Furniture. The User-Defined

Collection can also be used to define project or organization-specific subsets of the product items in an overall product model that may have significance only in the context of that project or organization.

3.2.8 Structures Information - Subtyping

Subtyping in information modelling provides the ability to structure information from a generalized, high level entity down to a very specialized, low level type of that high level entity. The O&F information described in this AP makes extensive use of this concept.

Table F-01 depicts the conceptual levels of subtypes employed in the models in this AP beginning with Ship_Product_Item_Version. These levels are called conceptual levels because they are not all implemented for each type of SPIV. For some types, some levels are skipped, and for others, the levels may be applied out of the sequence portrayed in this figure. However, they do represent the typical subtype organization used throughout the models in the ARM.

Figure F-01 depicts the five top-level subtypes. These first five levels serve as the foundation for this AP as well as others in the domain of O&F Systems (e.g., ladders, gratings, and nonstructural bulkheads). The subtyping facility is used in the O&F information models to define different attributes and relationships at different levels of (sub)type of entity in the subtype "tree". For example, all Ship_Product_Items (SPI's) have unique ID's and a list of versions (Ship_Product_Item_Versions). At a much more specialized level, a Specific_O&F_Port is a type of SPI that has an attribute of "Specific_O&F_Port_Type". Nearly all items in the enclosed O&F models are types of SPI, and hence have ID's and SPI Versions. Only the Specific_O&F_Port type of SPI has Specific_O&F_Port_Type.

It is important to understand that an SPI and, for example, its Specification_O&F_Port subtype, both describe the same item. All of the attribute and relationship characteristics of an entity which is a common supertype of many subtypes are shared by all of ID subtypes in an unambiguous way. Further, the definition of specific

attributes and relationships for a supertype entity that apply to all of its subtypes makes implementation of the physical data structures to hold such data more compact. Two of the more important subtype classifications are described in the following subsections.

3.2.8.1 Generic, Specific and Occurrence Definition Levels

This AP makes a distinction between a class, or family of objects (the Generic definition), a specific member of the class or family (the Specific definition), and an instance of a specific class member in a particular usage (the Occurrence definition). This distinction occurs in Level 2 of the subtype tree (see Table 1).

Level No.	Name	Description
1.	SPIV	Ship_Product_Item_Version - the top level
2.	Level	"Level" refers to the Generic, Specific and Occurrence subtypes. (see Section 3.2.8.1)
3.	Class	The Class level differentiates between Product_SPIV, End_SPIV, Interface_SPIV, Space_SPIV, Configuration_SPIV and User_Defined_Collection_SPIV.
4.	Main Type	The first level of SPIV differentiation within class.
5.	Subtype	The second level of SPIV differentiation within class. This is the "O&F Object" level.
6.	Discipline/ Function	The third level of SPIV differentiation within Class. This level typically is the first in which O&F objects are specifically identified.
7.	Speciality	The first of potentially several levels of specialization of a Level 6 object. For example, the Level 6 object "O&F_Interconnection_Occurrence" has a Level 7 subtype of "O&F"_Section_Occurrence."
8-N	Sub-Speciality	Levels of increasing specialization within a Level 7 item. These levels are typically used only in the Product_SPIV subtype breakdown when it becomes necessary to identify a type of specialized product item which has unique requirements for attributes or specialized relationships.
Last	Specificity	This level differentiates between the "Design" definition of the parent object and its "Implementation" Definition. (See Section 3.2.8.2). This subtype differentiation is selectively used at higher levels when necessary.

Table 1 Conceptual Subtype Levels

This "level" concept is used to make the distinction between a class of parts, such as all nonstructural bulkheads, a specific bulkhead such as joiner, and an instance or usage of the joiner bulkhead in a particular location within the nonstructural bulkhead system. Generic objects can be implemented either as a set of Specific objects or as a parametric object which, given some values for defined parameters, results in a Specific object. Thus, a Generic object could be manifested as a library of Specific objects, a component type symbol or a "macro" program used to create Specific/Occurrence objects.

A Specific object can be thought of as an entry in a traditional parts catalog or library. (Note that Generic objects could reside in a library or catalog as well.) An Occurrence level object is an instance of a Specific object that has been used in a particular usage giving it uniqueness (such as Position and orientation).

3.2.8.2 Specificity

"Specificity" here refers to two different aspects of a Ship_Product_Item_Version which differentiate between the item as a design object and the same item as physically implemented. These two aspects are modelled as two non-exclusive subtypes of an item called "Design" and "Implementation," respectively. These subtypes usually, though not always, occur only once at the bottom of the subtype tree. (Exceptions include Engineering_Part_Occurrence and Specific_Engineering_Part, and Attachment_Occurrence.) The rule used in making this distinction is that an item defined by its "Design" subtype information has not, or could not, been sourced, or could not be built from just this information. An item defined by its "Implementation" subtype has been sourced or could be built from its complete set of information.

The main intent for these subtypes is to make clear the distinction between the design requirements for an item and its chosen implementation by separating its design requirement/intent attributes from its implementation/physical attributes. There is an implied "Is_Implemented_By" relationship between an item's Design subtype and its Implementation subtype.

In practice an object being designed undergoes a period of nearly continuous refinement in which its degree or state of specificity increases. It is not considered feasible or practical to define each such state by the data elements which characterize it, for all possible product item types. The distinction made by the "Design" and "Implementation" subtypes is simply that for the parent item, design definition has completed for the current version when its "Implementation" information has been specified and approved.

3.2.9 Item Identification

Three classes of item identification requirement are presented by this AP. They are:

— The identification of a given product item must be uniquely independent of the transfer data sets in which it may be present. Thus the item's identification must demonstrate "persistent uniqueness." This requirement exists due to the versioned nature of Ship Product Items. The address space for Ship Product items is therefore the overall product model (e.g., total ship, ship zone. alteration project) of which they are components.

— The identification scheme for product items must not require that sending or receiving organizations adhere to a particular product item identification practice which in itself requires significant additional administrative overhead to effect. For example, it should not be necessary for organizations to set up separate data control functions simply to insure that items are consistently identified in transfer data sets. Similarly, organizations should not have to modify their product definition process to accommodate a particular identification scheme.

— As discussed above, external references to library items and items which may be or may have been transferred at another time must be supported.

These requirements have resulted in an identification and referencing scheme which is descrived in Annex F.

Because of the potential incompatibility of any foreign (i.e. non-native) identification scheme with a receiving or sending product definition system's internal form, a mapping to and from this internal representation is assumed as a capability of translators implementing this specification. The details of this transformation are left to the implementers.

3.3 Symbols and Abbreviations

The following abbreviations apply to this application protocol:

— AAM	Application Activity Model
— AIM	Application Interpreted Model
— AEC	Architecture, Engineering, and Construction
— AP	Application Protocol
— ARM	Application Reference Model
— BOM	Bill of Material
— B-rep	Boundary Representation
— CG	Center of Gravity
— CPS	Collective Protective System
— CSG	Constructive Solid Geometry
— DIS	Draft International Standard
— ESWBS	Extended Ship Work Breakdown Structure
— GARM	General Architecture Reference Model
— HVAC	Heating, Ventilation, and Air Conditioning
— ICAM	Integrated Computer-Aided Manufacturing
— ID	Identifier
— $IDEF_0$	ICAM Definition Language 0
— IGES	Initial Graphics Exchange Standard
— IPO	IGES/PDES Organization

— ISO	International Standards Organization
— NIAM	Nijssen's Information Analysis Method
— NIDDESC	Navy Industry Digital Data Exchange Standards Committee
— O & F	Outfit and Furnishings
— PDES	Product Data Exchange using Step
— SPI	Ship Product Item
— SPIV	Ship Product Item Version
— STEP	Standard for the Exchange of Product Model Data
— UoF	Unit of Functionality

4. Informative Requirements

This clause specifies the information required for defining the design of the Outfit and Furnishings systems.

The information requirements are specified as a set of units of functionality, application objects, and application assertions. These assertions pertain to individual application objects and to relationships between application objects. The information requirements are defined using the terminology of the subject area of this application protocol.

The information requirements correspond to those of the activities identified as being in scope of this application protocol in the Application Activity Model in Annex E. A more complete and formal description of the reference model, in NIAM, is presented in Annex F.

4.1 Units of Functionality

This subclause specifies the units of functionality for the Outfit and Furnishings application protocol. This Part specifies the following units of functionality:

a) O&F Configuration Management
b) O&F System
c) O&F Connectivity
d) O&F Openings
e) O&F Part
f) O&F Device
g) O&F Equipment
h) O&F Insulation
i) O&F Test

4.2 Application Objects

This subclause specifies the application objects for the Outfit and Furnishings application protocol. Each application object is an atomic element that embodies a unique application concept and contains attributes specifying the data elements of the object. The application objects and their definitions are given below.

AC Power Characteristic: A subtype of Power Characteristic defining the properties of electrical voltage, frequency, and number of phases associated with an electrical power value.

Access Device: A type of device whose function is to close an opening (e.g. Door, hatch, etc).

Accommodation Ladder: Portable steps from a ship's gangway down to the waterline or a pier alongside, rigged from a davit or crane on board

Accommodation Ladder Attaching Part Occurrence: An occurrence of a type of part used to attach an Accommodation Ladder Major Part to another Engineering Part

Accommodation Ladder In Use Part Location: The location description for an Accommodation Ladder Part Occurrence while it is in use.

Accommodation Ladder Major Part Occurrence: An Occurrence of a major Accommodation Ladder Part, (e.g., bridle assembly, platform assembly, etc)

Accommodation Ladder Part Occurrence: Any part involved with the Accommodation Ladder System

Accommodation Ladder System Occurrence: The collection of all the parts involved in an occurrence of an accommodation ladder.

Accommodation Ladder Tread Quantity: The number of treads contained in the accommodation ladder.

Adjudicated Cost: The adjudicated cost of a Change.

Air Heat Rate: The rate at which heat is dispersed to the air from a device.

Allowance Parts List Number: The identifier assigned to an Engineering Part for use in Logistics.

Angle Tolerance: The angular tolerance (+/-) assigned for equipment.

Approval: - The process of reviewing and accepting the configuration of a Component SPIV in the context of a Configuration SPIV.

Approval Event: An entity composed of one Approval Flag and one Date/Time. Each Approval Relationship has one or more Approval Event. The collection of all Approval Events of an Approval Relationship provides the approval history.

Approval Flag: An attribute attached to an Approval Relationship that identifies the approval level of the Component SPIV in the context of the Context SPIV of the Approval Relationship. The allowed values are "unapproved", "Approved", "reserved" or "rejected".

Approval Relationship: A type of SPIV Relationship that defines the relationship between a Configuration SPIV and its Component SPIVs. It carries an Approval Flag and a Date/Time.

Approval Status: STEP Part 41 entity for approval level associated with product data status of a change.

Authorizing Authority: The person or organization that authorized a Change.

Assembly Assembly Instructions: A Type of Assembly Instruction associated with an O&F Assembly Occurrence which defines a task to be carried out in its assembly.

Assembly Coating Instructions: A type of Assembly Instruction associated with an O&F Assembly Occurrence which defines a task to be carried out in its surface preparation or coating.

Assembly End: An entity associated with an Assembly that is either attached to another assembly or is freestanding.

Assembly End Preparation: The manufacturing requirements for preparation of an end before it is joined to another.

Assembly Installation Instruction: A type of Assembly Instruction associated with an O&F Assembly Occurrence which defines a task to be carried out in its installation.

Assembly Instruction: An entity associated with one O&F Assembly Occurrence which defines the type,number and description of an instruction used in its production.

Assembly Insulation Instruction: A type of Assembly Instruction associated with an O&F Assembly Occurrence which defines a task to be carried out in its insulation.

Assembly Occurrence: An instance of a that represents a collection of two or more O&F parts.

Assembly Shop Drawing Number: The shop drawing number for the Assembly

Attached Penetrating Object: One of a set of entity types that play the role of being "attached" in an Attachment Occurrence

Attaching Part Occurrence: A type of Engineering Part Occurrence which attaches to either another Engineering Part Occurrence or an O&F Interconnection Occurrence for the purpose of supporting, restraining, operating or insulating that part or interconnection.

Attaching Penetrated Object: One set of entity types that play the role of "attaching" in an Attachment Occurrence.

Attachment Configuration: An entity which defines the function and geometric configuration of an Attachment Occurrence.

Attachment Configuration Dimensionality: Any dimensions assigned to an Attachment Configuration.

Attachment Configuration Function: The function or purpose of the Attachment Configuration.

Attachment Configuration Identification: An identifier attached to an Attachment Configuration.

Attachment End Occurrence: The aspect of an object which is involved with that object's attachment to another object. It is a logical association between an object that is involved in an Attachment Occurrence and that Attachment Occurrence.

Attachment Occurrence: A type of Interface SPIV Occurrence which defines a physical attachment between two objects; one in the set Attached/Penetrating Object and one in the set Attaching/Penetrated Object

Attachment Positional Dependency: An entity representing a directed relationship between one Attachment Occurrence whose position is the basis for the position of a second Attachment Occurrence. The first is said to be independent while the second is dependent on the first for its position.

Bottom Shell Drain Plug Occurrence: An occurrence of a type of O&F Part used in a part of the ship structure.

Bracket Assembly Occurrence: An occurrence of a type of Accommodation Major Part used in attaching the ladder or other part to another.

Bridle Assembly Occurrence: An occurrence of a type of Accommodation Ladder Major Part which is a span of rope, chain or wire with both ends secured and the strain taken on the midpoint.

Catalog: An electronic file of data describing various aspects of a set of objects (principally Engineering Parts) which can be represented within product models. These aspects include shape, material and functional characteristics. Within this AP, a Specific Engineering Part may have a definition resulting from retrieving such catalog data for the part.

Catalog Key Field: One of potentially several named fields of data within a named catalog which is used to access that named catalog.

Catalog Name: The identifier for a catalog.

Catalog Reference Definition: The identifier into the catalog for a Specific Engineering Part.

Catalog Reference Element: The combination of a Catalog Key Field and a data value associated with that Catalog Key Field which together comprise one of several key values used to access a catalog.

Catalog Reference Element Value: The value of a Catalog Reference Element.

Catalog Reference Identifier: The collection of Catalog Reference Elements which taken together uniquely identify a logical member of a catalog.

Catalog Reference Identifier Value: The identifier text for a Catalog Reference Identifier.

Change: A formal request for change to one or more SPIV's. Examples are Headquarters Modification Request (HMR) and Engineering Change Proposal (ECP). Brings together certain pieces of information that are recorded when a modification has been made to product data. (Part 41)

Change Alternative: One of potentially many ways to satisfy the requirements of a Change. The Change Alternative may point to zero, one or many SPIV's that it will impact.

Change Alternative Identification: The identifier on a Change Alternative.

Change Revision: The combination of a Change and a Configuration SPIV which serves to identify the Configuration SPIVs (e.g. drawings) in which a Change has been incorporated.

Change Revision Status: Defines the approval/incorporation status of a Change Revision

Change Status: The status of a Change (e.g., "accepted", "rejected", "working", "complete").

Change Status Event: An attribute of Change that identifies the status of the change and when it reached that status.

Change Status Event: The event that results in a change in status.

Change Type: An attribute of Change that identifies what type of change it is. For example, it might be a Headquarter's Modification Request (HMR) or an Engineering Change Proposal (ECP).

Checker: The person that has reviewed a Creation, Modification, Deletion Event.

Climber Safety Rail: A type of O&F Part used with the purpose of assisting in one's climbing.

Climber Safety Rail Bracket Occurrence: An occurrence of a bracket used to attach a Climber Safety Rail to another Engineering Part.

Color Identifier: The actual identifier for a color.

Compartment: Room or space on board ship.

Compartment Boundary: A type of Space End Occurrence which logically defines one side of the enclosed space of a Compartment Occurrence.

Compartment Exterior Boundary: A type of Compartment Boundary whose opposite side is on the outside of a ship.

Compartment Height: A measure of the vertical extent of a compartment reflecting the dimension between the bottom and top boundaries of a compartment. It is always measured along a vector parallel to the vertical designated for th ship.

Compartment Interface: A logical connection between two Compartment Boundary entities used to facilitate the definition of adjacency conditions between Compartment Occurrences.

Compartment Name: A name given to a compartment usually based on utilization.

Compartment Number: A number assigned to a compartment usually based on location.

Compartment Occurrence: An entity representing a ship compartment which is a type of Space Ship Product Item Version.

Compartment Tightness Criteria: The criteria for compartment tightness (e.g., airtight, watertight)

Compartment Tightness Test Element: A type of O&F Test Element that defines one step of an O&F Test whose function is to validate the tightness of a compartment.

Compartment Width: A measure of the transverse extent of a compartment reflecting the dimension between the inboard boundaries of the compartment. It is always measured along a vector parallel to the transverse direction designated for the ship.

Component Ship Product Item: A type of SPI that is the child in a product structure relationship.

Component Ship Product Item Version A type of SPIV that is the child in a product structure relationship.

Configuration Change: A linking entity that relates a Change with a Configuration SPIV.

Configuration Change Status: The status of the incorporation of a particular Change in a particular Configuration SPIV.

Configuration Ship Product Item: A type of Ship Product Item which defines an aggregation of other Ship Product Items which are treated as a unit for configuration control purposes.

Configuration Ship Product Item Version: A type of SPIV that groups other SPIV together for the purpose of configuration status accounting. Examples of Configuration SPIV are drawings, systems, zones, or assemblies. A Configuration SPIV is the approval context for one or more SPIVs.

Configuration Ship Product Item Version Owner: The person or organization that is responsible for a Configuration Ship Product Item Version.

Configuration Status Accounting: Maintaining records that contain information concerning the current, proposed, and passed configuration of SPIs and their relationships.

Context Ship Product Item: A type of SPI that is the parent in a product structure relationship.

Context Ship Product Item Version: A type of SPIV that is the parent in a product structure relationship.

Contractor Change Identification: The identifier assigned to a Change by the enterprise that will execute the Change.

Creation Modification Deletion Event: An event that causes the creation, modification, or deletion of a single SPIV. The Creation, Modification, Deletion Event entity links the created, modified, or deleted SPIV with the SPIV that was used as its baseline. It may be one of many Creation, Modification, Deletion Events contained in a given formal Change or part of a design iteration for which

there is no formal Change. It is identified by the concatenation of the created, modified, or deleted SPIV's identifier and the date/time that it occurred.

Customer Change Identification: The identifier assigned to a Change by the customer of Change.

Cost: The dollar value of a change.

Date and Time: Identifies the date and time that an event occurs. Date/Time is used to identify the date and time that a Creation, Modification, Deletion Event, Promotion Event, or Change Status Event occurs. This allows the user of the digital data to determine when changes have occurred in the product model. It is defined in ISO 10303.

Davit: A fixed or movable crane that projects over the side of a ship or over a hatchway for hoisting heavy objects.

DC Power Characteristic: A subtype of Power Characteristic which defines the electrical voltage associated with a direct current electrical power.

Deck Covering: An item that covers a deck whether it be tile or carpet.

Deck Covering Code Identifier: A code used in drawings that is used in an arrangement to refer back to a particular type Deck Covering.

Deck Covering Coverage Area: The text that describes the location of the deck to use Deck Covering.

Deck Covering Edge Requirement: The requirement for the edge of Deck Covering (e.g., tapered).

Deck Covering Formula Name: The identifier of a deck covering formula.

Deck Covering Grade Description: The identifier of a grade of Deck Covering that usually follows the formula.

Deck Covering Layer Number: The identifier for a particular layer of Deck Covering.

Deck Covering Layer Quantity: The identifier value for the quantity of layers required for a particular deck covering.

Deck Covering Surface Preparation: The preparation necessary before Deck Covering is applied to an Engineering Part.

Deck Covering System Occurrence: The occurrence of a system of Deck Covering including preparation, the various layers required, coloring, etc.

Deck Covering Thickness: The thickness of a particular layer of Deck Covering.

Decorative Chips Occurrence: A feature that can be added to Deck Covering for decorative purposes.

Deflection Cover Occurrence: The occurrence of a deflection cover which is a type of Non-Structural Bulkhead Attaching Part Occurrence.

Design Pressure: The pressure a particular entity is designed for.

Design Temperature: The temperature a particular entity is designed for.

Device Occurrence: A type of Engineering Part Occurrence which includes Doors, Hatches, and Ladders.

Discrete Part Occurrence: A subtype of Engineering Part Occurrence which includes Attaching Part Occurrences and Fastener Occurrences.

Distance Between Bearing Bars: The linear distance between bars in gratings that bear the load.

Distance Between Cross Bars: The linear distance between grating bars that do not bear loads.

Drop Height Value: The distance a weight is dropped in a testing the ability of an object to withstand the stress obtained by dropping the weight.

Electrical Insulation Resistance Test Element: A type of O&F Test Element that defines one step in an O&F Test whose purpose is to test the electrical resistance of wire/cable insulation.

End Ship Product Item: A type of Ship Product Item which defines a topological end of a Product SPI, Space SPI or Interface SPI.

End Ship Product Item Version Occurrence: An instance of an End SPI

Engaging Distance: The distance or overlap where two parts join.

Engineering Part Center Of Gravity: The coordinates of the COG of a Specific Engineering Part relative to the part's local coordinate system.

Engineering Part Density Value: The density (e.g., given in pounds per foot) of an Engineering Part.

Engineering Part Description: The text description for an Engineering Part (e.g., sheet, post, angle).

Engineering Part Identifier: An entity consisting of the concatenation of Engineering Part Number Organization ID and Engineering Part Organization Part Number used to refer to an Engineering Part Occurrence.

Engineering Part Location Description: This is a textual description for where a part is located (e.g., Engine Room - 03 level.

Engineering Part Manufacturer Name: The company name that produces the Engineering Part.

Engineering Part Manufacturer Part Number: The identifier that the producer of the Engineering Part assigns to it.

Engineering Part Material: The generic name of the material of an Engineering Part (e.g. steel, bronze, etc.)

Engineering Part Material Specification: The material specification identifier for an Engineering Part (e.g., Mil-Standard, ASA standard, Commercial Standard)

Engineering Part Maximum Allocated Weight: The weight assigned or allocated to an Engineering Part.

Engineering Part Number Organization Identifier: The identifier for the organization that produces the Engineering Part.

Engineering Part Occurrence: A type of Product SPIV Occurrence.

Engineering Part Occurrence Design: Those attributes of an Engineering Part obtained at the Design stage (e.g., Location, Manufacturer, etc.)

Engineering Part Occurrence Implementation: Those attributes of an Engineering Part obtained at implementation (none are used in the AP)

Engineering Part Occurrence Shape Representation: The concatenation of Shape Representation Identifier, Type and Style

Engineering Part Occurrence Shape Representation Identifier: The identifier attached to Engineering Part Shape Representation.

Engineering Part Occurrence Shape Representation Type: The type of Shape Representation used for an Engineering Part (CSG, BRep, etc).

Engineering Part Organization Drawing Find Number: The identifier on a drawing that is used to tie the occurrence of a part on a drawing arrangement to that drawing's material list, drawing notes, etc.

Engineering Part Organization Drawing Number: The drawing number for the drawing that shows the engineering part.

Engineering Part Organization Part Number: The identifying number for a particular engineering part.

Engineering Part Part Number Organization Identifier: The identifier provided for the organization.

Engineering Part Required Shock Class: The shock grade (A, B or C) designated for an Engineering Part.

Engineering Part Specification: The specification used to purchase an Engineering Part.

Engineering System Occurrence: The occurrence of a system which performs a function and consists of a collection of connected Engineering Part Occurrences and O&F Interconnection Occurrences.

Enterprise: The identification of a supplier/manufacturer/ consumer of a Product (in-house or external).

Envelope Occurrence: A type of Space SPIV Occurrence used to represent non-compartment volumes of interest such as volumes associated with the removal route of a piece of equipment.

Equipment Applicable Specifications: Those specifications associated with an Equipment Occurrence which are applicable to it in the sense that they define operating environment or other related requirements for which the Equipment Occurrence must be suited. These specifications are distinct from the Equipment Occurrence's system conformance specification which identifies the specification which directly governs its fit, form and function.

Equipment Description: The text used to describe Equipment.

Equipment Fixed Mount Data: A type of Equipment Mounting Data for an Equipment Occurrence.

Equipment Fixed Mount Type: The type of Fixed Mount.

Equipment Foundation Finish: The type of finish for a foundation.

Equipment Installation Instruction: An entity representing the ID of a text instruction describing some aspect of the job of installing an Equipment Occurrence.

Equipment Interchangability: An Entity representing the identifier of a text instruction describing some aspect of the job of installing an Equipment Occurrence.

Equipment Manufacturer Drawing Number: The drawing number identifier.

Equipment Mount Data Identifier: The identifier associated with the mount data.

Equipment Mounting: The entity associated with Equipment Occurrence encompassing information about its mounting.

Equipment Mounting Data: The entity associated with an Equipment Occurrence which describes its required mounting parameters.

Equipment Name: The name designator for an equipment.

Equipment Occurrence: A type of Engineering Part Occurrence. An Engineering Part Occurrence classified is typified by larger size and complexity than other Engineering Part Occurrence subtypes.

Equipment Occurrence Design: The design entities associated with Equipment Occurrence.

Equipment Occurrence Implementation: The implementation entities associated with Equipment Occurrence.

Equipment Operating Condition: Defines a set of operating parameter values of an Equipment Occurrence.

Equipment Operational Condition Description: The description of the Equipment Operational Condition.

Equipment Operational Condition Identifier: The identifier of the Equipment Operational Condition.

Equipment Power: An entity which defines a power type (e.g. 60 Hz) and power value.

Equipment Removal Instruction Identifier: The identifier for the instruction for Equipment Removal.

Equipment Removal Route Instruction: The identity of an instruction regarding the route to be used in removing a piece of equipment from the ship. Each Equipment Occurrence may have many such instructions - the total of which completely define the specified route.

Equipment Required Insulation Type: The type of insulation required for the Equipment.

Equipment Required Test: Defines a test required to be carried out on an Equipment Occurrence.

Equipment Resilient Mounting Data: A type of Equipment Mounting Data for an Equipment Occurrence.

Equipment Resilient Mounting Specification ID: The specification ID for resiliently mounting the equipment.

Equipment Safety Description: The description of safety requirements for equipment.

Equipment Shock Movement Direction: An entity defining a direction, magnitude, inertia and product of inertia of the movement of a resiliently mounted Equipment Occurrence due to shock loading.

Equipment Shock Movement Direction Identifier: The identifier for the shock movement direction.

Equipment Shock Qualification Status: The status (approved, disapproved, etc) of the Equipment shock qualification.

Equipment Specification ID: The identifier used for the Equipment Specification.

Equipment System Conformance Specification Identifier: The identifier for the Equipment System Conformance Specification.

Equipment System Operating Condition: The intersection entity of an Equipment Operating Condition and a System Operating Condition allowing many-to-many relationship between these two entities.

Equipment Test ID: The identifier for the Equipment Test.

Estimated Cost: The estimated cost of a Change Alternative.

Event Description: A textual description of a Creation, Modification, Deletion Event.

Event Type An attribute of a Creation, Modification, Deletion Event that identifies it as a creation, modification, or deletion event.

Executer: The person responsible for making the change associated with a Creation, Modification, Deletion Event.

Exterior Insulation Envelope: The exterior envelope of the insulation and the Engineering Part it is attached to.

Fastener Occurrence: A type of Attaching Part Occurrence used in the physical connection at an O&F Interface Occurrence or an Attachment Occurrence.

Fastener Quantity: The number of a type of Specific Fastener required in a Specific Fastener Set.

Fastener Set Occurrence: An instance of a Specific Fastener Set used by an Interface SPIV Occurrence Implementation (i.e. the implementation of a joint or non-joint attachment).

Fastener Set Type: The type of fastener set.

Fastener Set Usage: The usage for the fastener set.

Fastener Usage: The combination of a Specific Fastener and its Fastener Quantity in a Specific Fastener Set.

Fender: A device of canvas, wood, line, cork, rubber, wicker, or plastic slung over the side of a ship in position to absorb the shock of contact between ships or between a ship and pier.

Functional Group Code: An identifier given to a part for logistical purposes.

Floor Plate Occurrence: The occurrence of a non-structural type flooring that is ysually hinged, portable or false type.

Flow Rate Condition Value: The value assigned to flow rate condition.

Fresh Water Heat Rate: The rate of heat transfer to or from fresh water.

Generic Ship Product Item Version: A type of SPIV that provides a parametric definition for a Specific Ship Product Item.

Grating: Metal or wooden lattice work used to cover hatches while still providing ventilation below or to provide a platform.

Grating Type: The type of grating (hinged or portable)

Handrail: Open fence aboard ship made of rigid material as opposed to lifelines.

Handrail System Occurrence: The occurrence of a handrail system contains the rails and connecting type parts for a system which is of the type single or double rail.

Hinge Occurrence: The occurrence of a hinge which is used in floor plates or gratings.

Hoist Occurrence: The occurrence of a hoist used in accommodation ladders.

Hull: A particular ship of a class of ships.

Hull Fitting Occurrence: A hull fitting is a type of Engineering part attached to the hull.

Inclined Ladder: A type of ladder that goes from deck to deck at an angle other than vertical.

Inclined Ladder Angle With Deck: The angle an inclined ladder makes with the deck.

Inclined Ladder Handrail Type: The type of handrail used with an inclined ladder (pipe rails, chain).

Inclined Ladder Lug Occurrence: The occurrence of a type of engineering part used in an inclined ladder that is used for attaching to the deck or another engineering part.

Inclined Ladder Lug Type: The type of lug (upper or lower)

Inclined Ladder Shield: A canvas or metal sheet secured on the underside of a ladder.

Inclined Ladder Tread Location: The location of the tread (top, bottom or middle).

Inclined Ladder Tread Space: The spacing of treads.

Inclined Ladder Tread Width: The width of the treads.

Inertia: A property of matter whereby it remains at rest or continues in uniform motion unless acted upon by some outside force.

Installation Instruction Identifier: The alpha-numeric identifier for the instruction for installing insulation.

Insulation Cover: A covering for insulation that may of the type sheathing or sheet.

Insulation Envelope Occurrence: A type of Part Envelope Occurrence which defines the volume allowance around an Attached/Insulated Object required by that object's insulation.

Insulation Part Occurrence: An occurrence of a Specific Insulated Part which is associated with an Attached/Insulated Object via its Insulation End Occurrence.

Insulation Sheathing: A covering used on insulation.

Insulation Sheathing Perforations: Holes in insulation sheathing.

Insulation Sheet Occurrence: Another type covering that doesn't have perforations.

Interface SPI: A type of Ship Product Item which represents a logical connection between other Ship Product Items.

Interface SPIV: A version of an Interface SPI

Interface SPIV Occurrence: An instance of the Interface subtype of SPIV.

Internal Insulation Envelope: The internal envelope of the insulation.

In Use Accommodation Ladder Center of Gravity: The COG for an accommodation ladder while it is being used.

In Use Accommodation Ladder Major Part Center of Gravity: The COG of an accommodation ladder major part (platform, bridle, etc).

Joining Type Name: The identifier for the joining type.

Key Field: A named data field used as an access key field in one or more catalogs.

Ladder Rung: The step or tread of a vertical ladder.

Lifeline: Line secured along a deck to lay hold of in heavy weather or any line used to assist personnel.

Lineal Attachment Configuration: An entity which references a linear geometry entity to model an Attachment Configuration.

Lizard Assembly: A section of line with a thimble at one end, through which passes a small wire cable stretched taut between two fixed structures on board ship. The lizard can move freely along the wire, while firmly gripped by a man.

Load Weight Value: The value of the weight used in load testing.

Lock Type: The type of lock, in this case on furniture (key, combination, etc.)

Medium Flow: An entity which associates a medium and its flow rate with a Specific Equipment.

Medium Name: The name of the media used in flow (fresh water, hydraulic fluid, air, sea water, etc.).

Mil Std Number: The designator for a military specification.

Modular Quantity: The number of modules that make a furniture item.

Modular Sections: The entity whereby furniture can be created from modules.

NavSea Drawing Number: An identifier created by the Navy that is assigned to a drawing.

Navy Date and Time: A subtype of the ISO 10303 Part 41 date and time entity. Within this UOF, it is used as a versioning mechanism for the creation and modification of an O&F geometry element.

Navy Person And Organization: A subtype of the ISO 10303 Part 41 person and orgaization entity. within this UOF, it is used to denote the individual responsible for creating the geometry, as well as the person last modifying`the geometry.

Non Structural Bulkhead Attaching Part Occurrence: A type of part used in a non-structural bulkhead system that may be either a post or a deflection cover.

Non Structural Bulkhead Attaching System: The combination of O&F fabrication parts and posts and deflection covers to form an attaching system for non-structural bulkheads.

Non Structural Bulkhead Panel Occurrence: The actual panel which may be of the type joiner, expanded metal, partition, light traps, curtain plates or secondary sheathing.

Non Structural Bulkhead System Occurrence: The combination of panels and attaching system for non-structural bulkheads.

Non Structural Panel Type: The type of panel (joiner, light traps, etc.)

Occurrence SPIV: A unique SPIV that is part of the design of a product (see figures 8 & 9 in [2]). The design may be built several times and therefore the Occurrence SPIV may be applicable to more than one hull. Typically an Occurrence SPIV points back to a Specific SPIV either for their complete definition, as in the case of a valve, or for its made from material, as in the case of steel plate part cut from sheets. Occurrence SPIVs would have attributes such as Functional Group Code (FGC) and drawing & find number.

Opening Shape Representation Type: The type of shape an opening has.

Organization: This entity that specifies the information that is required to identify an administrative structure. (Part 41

Organization Change Identifier: The identifier an organization assigns to an change.

O&F Assembly Occurrence: A type of Assembly Occurrence which can represent a unit assembly of O&F Parts, O&F Devices or an aggregation of these stored on a structural assembly/block.

O&F End Occurrence: An entity associated with an Engineering Part Occurrence which is either attached to another entity or is freestanding.

O&F End Occurrence Shape Representation: The shape representation for an O&F End Occurrence.

O&F Fabrication Part: A type of O&F Part Occurrence for which fabrication data has been or will be developed.

O&F Fabrication Piece: An individual fabricated piece of which there may be several used to makeup a complete O&F Fabrication Part.

O&F Interconnection Interface Occurrence: A type of O&F Interface Occurrence which associates two or more O&F Interconnection Occurrences.

O&F Interconnection Occurrence: A type of Interface SPIV Occurrence which identifies various types of linkages between bounding O&F End Occurrences..

O&F Interface Occurrence: A type of Interface SPIV Occurrence which identifies a connection between adjacent O&F End Occurrences.

O&F Joint Joining Type: An entity which defines the technique used in making an O&F Joint Occurrence from the enumeration "weld", "solder", and "screw".

O&F Joint Occurrence: A type of O&F Interface Occurrence which defines a physical joint between the adjacent Engineering Part Occurrences.

O&F Fabrication Part Explicit Geometry Part: A type of O&F Fabrication Part whose fabrication geometry is explicitly provided (bending, layout and cutting geometry) with the part.

O&F Fabrication Part Bend Break Line Layout Geometry: A set of geometry associated with an O&F Fabrication Piece which defines the locations and angles of lines along which the piece is to be bent.

O&F Fabrication Part Cutting Geometry: A set of geometry associated with an O&F an O&F Fabrication Piece which defines the geometry of the cutting contours of the piece.

O&F Fabrication Part Hole Punch Layout Geometry: A set of geometry associated with an O&F Fabrication Piece which defines the size and layout of holes to be punched in that piece.

O&F Fabrication Part Standard Shape Macro Parameter: The combination of a shape macro parameter name and its value which is to be used as input to a standard shape macro to produce the fabrication geometry of the O&F Fabrication Part Standard Shape Macro Part with which it is associated.

O&F Fabrication Part Standard Shape Macro Part: A type of O&F Fabrication Part whose fabrication geometry is defined via the execution of a standard shape macro rather than explicitly.

O&F Part Occurrence: A type of Engineering Part Occurrence that is an instance of a Specific Distribution Part that serves an outfit and furnishing function.

O&F System Interface Occurrence: A type of Engineering System Occurrence which identifies a joint of two O&F Parts at which system identify changes.

O&F System Occurrence: A type of Engineering System Occurrence consisting of a collection of Engineering Part Occurrences and O&F Interconnection Occurrence

O&F Test: An entity which relates a set of test descriptive attributes to the set of O&F Test Elements comprising a particular set.

O&F Test Element: One step or procedure in an overall O&F Test.

Owner: The person or organization responsible for a Configuration SPIV.

Parameter Set: A set of values that when supplied with a Generic SPIV to define a Specific SPIV.

Part Envelope Occurrence: An entity which represents a volume surrounding an Engineering Part Occurrence which has a specific type/meaning such as "Shock Envelope"

Path Arc: An entity which provides network geometry to distribution objects and may be either a line or a circular arc. This entity allows a network of O&F objects (i.e. O&F parts and interconnection) to be represented in the absence of shape representation of their constituent parts.

Path Node: An entity which defines an end of a Path Arc and provides a location for that end.

Path Split: An entity which defines a junction located at a Path Node which associates two or more other, possibly offset Path Nodes which branch from the locating node.

Person: Identifies an individual human being.

Person And Organization: Entity from ISO 10303, Part 41 that identifies a person and his/her organization.

Physical Occurrence Ship Product Item Version: A unique SPIV that is the physical manifestation of an Occurrence SPIV (see figures 6 & 7 in [2]). A Physical Occurrence SPIV is applicable to one and only one hull. It is a logical copy of its Occurrence SPIV with as-built or as-modified differences included.

Physical Ship Product Item Version: A unique SPIV that is the physical manifestation of a Specific SPIV (see figures 6 & 7 in [2]). For example, a purchased pump will have a serial number. The purchased pump is a physical manifestation of the pump design which has a manufacturer and model number. In this example the purchased pump is a Physical SPIV and the pump design is a Specific SPIV. Both the Physical SPIV and the Specific SPIV are independent of a hull. A Physical SPIV can be used on hull 688 and removed overhauled and used on hull 689.

Platform Occurrence: The occurrence of a platform used in accommodation ladders.

Portable Ladder: A type of ladder that may either stowed or in-use.

Portable Ladder Condition: In-use or Stowed.

Portable Ladder Type: Jacob's or pilot's.

Post: A type of O&F fitting used in non-structural bulkheads to attach panels.

Post Type: Designates the post as "Solid H-Post","Half-Post", "45-Degree Corner" or "90-Degree Corner"

Potential Ship Product Item Version Change: A linking entity that relates a Change Alternative to one SPIV. A Change Alternative may effect many SPIVs and therefore would have many Potential SPIV Change entities,

Power: An entity which defines a power value and the power characteristica associated with that power value.

Power Characteristic: An entity which defines the type (e.g. mechanical) and properties of the power entity with which it is related.

Product SPI: A type of Ship Product Item representing a Engineering System, Engineering Part or Assembly.

Promotion: The process of elevating the Promotion Level of an SPIV from its current level to the next highest Promotion Level.

Promotion Event: Identifies a Promotion Level change for an SPIV and when it occurs. An SPIV may have zero, one or many SPIV Promotion Events. The collection of all the promotion events for a SPIV provides a promotion history.

Promotion Level: The Promotion Level is an indicator of where in the approval process a specific SPIV is. The following are the allowed Promotion Levels:

— Working - Indicates that the item is still under development and therefore subject to significant change. Only working SPIVs may be significantly changed.

— Preliminary - Indicates that the item has started the approval process. Preliminary SPIVs can not be significantly changed. However, a working SPIV can be repromoted and replace a preliminary SPIV. If this occurs all Approval Flags must be reset to "unapproved".

— Issued - Indicates that the item has completed the approval process. Once an SPIV has been issued it can never be deleted or significantly changed.

Protective Coating: A coating (e.g., paint) applied to an Engineering Part for protection.

Protective Coating System Occurrence: The combination of surface preparation, and various layers or coats of protective coating required to cover an Engineering Part.

Rail: A type of O&F Part used in forming liferails.

Removal Route Envelope Occurrence: The envelope required to remove equipment.

Reservation Description: A textual explanation of the reason for the Reservation Event.

Reservation Event: An entity that carries the Reservation Flag, Reservation Description, and Date/Time of an act of reserving or unreserving an SPIV within the context of a Context SPIV.

Safety Net: Horizontal safety system installed around boundaries where liferail/line would interfere with deck or aircraft operation.

Shackle Occurrence: The occurrence of a particular major accommodation ladder part.

Sheathing:A protective or decorative covering.

Sheet: Material usually less than 5/16" thick and normally metal used to make O&F parts.

Ship Product Item: Anything whose configuration one wishes to manage. SPI includes engineering parts, assemblies, systems, and spaces. For example, for the NIDDESC Application Protocols the SPIs consist of, but are not necessarily limited to, the following:

— Ship's Structural Model

— plates	— shapes
— joints	— surfaces
— holes	— assemblies
— deck	— bulkhead

— Distribution Systems Model

— pipes	— components
— ducts	— wireways
— joints	— systems
— assemblies	

Significant Change: A change to an SPIV that is important to another SPIV. The importance of the change to another SPIV is defined by a set of rules, SPIV Relationship Context, that are part of the relationship between the two SPIVs.

SPIV: A unique variation of an SPI identified by the concatenation of the SPI's identifier and a specific Version.

A single SPIV can be viewed from many different perspectives. For example, a pipe hanger can be viewed as a simple support point on a pipe, as a structural member with specific degrees of freedom, as a group of parts that must be ordered, or as geometry for interference analysis. Each of these views have different sets of attributes and different geometry, but all are represented by the same SPIV.

SPIV Relationship: A relationship between two SPIVs defined by an application protocol. Some of the types of relationships are connectivity, assembly, system, and approval.

SPIV Relationship Context: A set of rules that define the significance, to each other, of the two SPIVs of an SPIV Relationship.

SPIV Relationship Type: An attribute of an SPIV Relationship that identifies the type of relationship between the two SPIVs. The uses of this attribute is to identify hierarchical structures within the network of product structures that are possible with this model. For example, a type of "source" could be used to identify the Configuration SPIV that a Component SPIV is purchased from. This helps avoid purchasing the same part more than once.

Ship Surface: An entity from the Ship's Structure AP that represents one type of ship geometry element that must be either a ship simple surface or a ship composite surface. It is envisioned, that the ship surface is a subtype of the ISO 10303 Part 42 Point entity.

Significant Change: A change to an SPIV that is important to another SPIV. The importance of the change to another SPIV is defined by a set of rules, SPIV Relationship Context, that are part of the relationship between the two SPIVs.

Space SPI: A type of Ship Product Item having the characteristics of a bounded region or volume.

Specific Attaching Part: A type of Specific Discrete Part.

Specific Device: A type of Specific Engineering Part that may be of type Specific Equipment or..

Specific Discrete Part: A type of Specific Engineering Part whose instances are not members of an O&F System Occurrence but which can play an important role in the systems's physical implementation.

Specific Engineering Part: A type of Specific Product SPIV.

Specific Engineering Part Shape: An entity which associates one of possible many Specific Engineering Part Shape Representations with a Specific Engineering Part.

Specific Engineering Part Shape Representation: An entity relating a set of shape-defining entities with a Specific Engineering Part

Specific Equipment: A type of Specific Engineering Part.

Specific Fastener: A type of Specific Attaching Part that is a member of a Specific Fastener Set.

Specific Fastener Set: An entity representing a collection of Specific Fasteners which are packaged together and instanced as a set in association with the joining of attachments and joints.

Specific Insulation Envelope: A type of Specific Part Envelope that is associated with a Specific Engineering Part whose geometric representation is independent and that therefore can have a defined envelope geometry defined for it.

Specific Insulation Part: A type of Specific Attaching Part whose purpose is to provide thermal or acoustic insulation.

Specific O&F Part: A type of Specific Engineering Part.

Specific Part Envelope: An entity that associates a shape representation of a volume associated with a Specific Engineering Part that serves to model the volumetric requirements for Insulation, Shock, Access/Maintenance for interference.

Specific Part Envelope Shape Representation: A shape representation of a volume associated with a Specific Engineering Part's Specific Part Envelope that serves to model the envelope's volume.

Specific Path Arc: A line or arc definition associated with a Specific Engineering Part which is used to define its centerline geometry.

Specific Path Node: An entity which delimits the start and end of a Specific Path Arc and whose location may be used after transformation to model coordinates, to locate one or more Path Nodes.

Specific SPIV: Items that may be instanced more than once in a design (see figures 6 & 7 in [2]). Typically Specific SPIVs are maintained in libraries. Specific SPIVs may represent complete parts such as a pump or stock material such as steel beam material available in 20' lengths.

Specific Design SPIV: A type of Specific SPIV that defines the "form, fit and function" of the Specific SPIV.

Specific Implementation SPIV: A type of Specific SPIV that defines the particular manufacturer and model number that satisfy the "form, fit, and function" of a Specific Design Ship Product Item Version.

Stowage Part: An O&F part used to fabricate a stowage.

Strips Occurrence: The occurrence of strips - an item used in deck covering.

Structural Part: A part from the Ship's Structure AP.

Surface Attachment: A type of O&F part used to hold an edge of a deck covering.

Surface Finish: The type of finish applied to a deck.

Surface Preparation: The preparation a surface needs to receive deck covering or protective coating

System Operating Condition: An entity which represents for a system a standard condition of its operation.

Tending Line: The attachment of a line (rope or cable) to a object (i.e. boat or boatswain chair)

Test Memo: A document (also may be called a test procedure) which details the tests to be conducted on an Engineering Part or Engineering System.

Transfer Event: An entity that carries the identification of the person that received a transfer of digital product model data and the Date/Time that the data was sent.

Transport Dolly Occurrence: A part used for transporting an accommodation ladder from the stowed position to the in-use condition.

User Defined Collection SPI: A type of SPIV which identifies a version of User-Defined Collection SPI pointing to a collection of other SPIVs.

Version: An entity whose value in combination with the ID of Ship_Product_Item is used to uniquely identify a Ship_Product_Item_Version

Vertical Ladder: A ladder composed of rungs mounted to a ships structural part mounted flush to a perpendicular bulkhead.

Vertical Ladder Clip: A part used to attach a vertical ladder to a bulkhead.

Vertical Ladder Rung: The steps of a vertical ladder.

Weight Line: A line used in an accommodation ladder.

Window: A transparent object.

Zone Occurrence: A type of Space Ship Product Version delineating a useful region or volume of a ship for design or operational reasons.

4.3 Application Assertions

5. Application Interpreted Model

5.1 ARM to AIM Mapping

This Section to be developed in future versions of the AP

5.2 AIM EXPRESS Short Form

```
SCHEMA o_and_f;
(* Version 0.7 of Ship Outfit and Furnishings AP
   Generated from NIAM model of ARM *)

TYPE ac_frequency_value = string;
END_TYPE;

TYPE ac_voltage_value = string;
END_TYPE;

TYPE acc_ldr_iu_pt_loc = string;
END_TYPE;

TYPE acc_ldr_tread_qty = string;
END_TYPE;

TYPE air_heat_rate_val = string;
END_TYPE;

TYPE all_parts_list_no = string;
END_TYPE;

TYPE ang_tol_value = string;
END_TYPE;

TYPE approval_status_id = string;
END_TYPE;

TYPE assembly_name = string;
END_TYPE;

TYPE assy_end_prep = string;
END_TYPE;

TYPE assy_instr_descrip = string;
END_TYPE;

TYPE assy_instr_no = string;
END_TYPE;
```

```
TYPE assy_instr_type = string;
END_TYPE;

TYPE assy_shop_dwg_no = string;
END_TYPE;

TYPE att_conf_dim = ENUMERATION OF
        (point,lineal,surface);
END_TYPE;

TYPE attach_config_func = ENUMERATION OF
        (bolt_hole,adhesive_area,weld_joint);
END_TYPE;

TYPE attach_config_id = string;
END_TYPE;

TYPE c_o_g_context_type = ENUMERATION OF
        (stowed,operating);
END_TYPE;

TYPE c_o_g_id = string;
END_TYPE;

TYPE ceiling_att_sys_id = string;
END_TYPE;

TYPE change_status = ENUMERATION OF
        (id_ed,letter_submitted,dropped,ECP_requested,scoped,
        approved,adjudicated,rejected,started,cancelled,completed);
END_TYPE;

TYPE change_type = ENUMERATION OF
        (contract_directed_change,contract_HMR,contract_FMR,
        non_contract_RFW,non_contract_RFD,non_contract_REA);
END_TYPE;

TYPE chg_rev_status = ENUMERATION OF
        (incorporated,not_incorporated);
END_TYPE;

TYPE color_id = string;
END_TYPE;

TYPE comp_boundary_side = ENUMERATION OF
        (above,below,forward,aft,port,starboard);
END_TYPE;

TYPE comp_ext_bound_nam = string;
END_TYPE;
```

```
TYPE comp_height_value = string;
END_TYPE;

TYPE comp_width_value = string;
END_TYPE;

TYPE compart_number = string;
END_TYPE;

TYPE compart_tight_crit = string;
END_TYPE;

TYPE compartment_name = string;
END_TYPE;

TYPE cost = string;
END_TYPE;

TYPE date_and_time_id = string;
END_TYPE;

TYPE dc_voltage_value = string;
END_TYPE;

TYPE deck_cov_edge_rqt = string;
END_TYPE;

TYPE deck_cov_form_name = string;
END_TYPE;

TYPE deck_cov_grade_des = string;
END_TYPE;

TYPE deck_cov_layer_no = string;
END_TYPE;

TYPE deck_cover_color = string;
END_TYPE;

TYPE des_pressure_value = string;
END_TYPE;

TYPE des_temp_value = string;
END_TYPE;

TYPE dist_bet_cross_bar = string;
END_TYPE;

TYPE dist_betw_bear_bar = string;
```

```
END_TYPE;

TYPE dk_cov_code_id = string;
END_TYPE;

TYPE dk_cov_layer_qty = string;
END_TYPE;

TYPE dk_cov_surf_prep = ENUMERATION OF
        (oxide_free,abrasive_blast_SP10,abrasive_blast_SP5,
        hand_tool_cleaned_SP2,power_tool_cleaned_SP1,light_sanding);
END_TYPE;

TYPE dk_cov_thk_value = string;
END_TYPE;

TYPE dk_cover_cov_area = string;
END_TYPE;

TYPE door_att_sys_id = string;
END_TYPE;

TYPE door_type = string;
END_TYPE;

TYPE e_p_description = string;
END_TYPE;

TYPE e_p_material = string;
END_TYPE;

TYPE e_p_matl_spec = string;
END_TYPE;

TYPE e_p_specification = string;
END_TYPE;

TYPE eng_distance_value = string;
END_TYPE;

TYPE eng_part_extrnl_id = string;
END_TYPE;

TYPE eng_pt_occ_ext_id = string;
END_TYPE;

TYPE ep_density_value = string;
END_TYPE;

TYPE ep_dwg_no_org_id = string;
```

```
END_TYPE;

TYPE ep_location_descr = string;
END_TYPE;

TYPE ep_manuf_name = string;
END_TYPE;

TYPE ep_manuf_part_no = string;
END_TYPE;

TYPE ep_occ_sh_rep_type = string;
END_TYPE;

TYPE ep_occ_shap_rep_id = string;
END_TYPE;

TYPE ep_org_dwg_fn = string;
END_TYPE;

TYPE ep_org_dwg_no = string;
END_TYPE;

TYPE ep_org_part_no = string;
END_TYPE;

TYPE ep_part_no_org_id = string;
END_TYPE;

TYPE ep_rqd_shock_class = string;
END_TYPE;

TYPE eq_description = string;
END_TYPE;

TYPE eq_fix_mount_type = string;
END_TYPE;

TYPE eq_mnfr_dwg_no = string;
END_TYPE;

TYPE eq_mnt_data_id = string;
END_TYPE;

TYPE eq_oper_cond_desc = string;
END_TYPE;

TYPE eq_oper_cond_id = string;
END_TYPE;
```

```
TYPE eq_rem_instr_id = string;
END_TYPE;

TYPE eq_reqd_insul_type = string;
END_TYPE;

TYPE eq_res_mt_spec_id = string;
END_TYPE;

TYPE eq_safety_descr = string;
END_TYPE;

TYPE eq_shk_mov_dir_id = string;
END_TYPE;

TYPE eq_shock_qual_stat = string;
END_TYPE;

TYPE eq_sy_conf_spec_id = string;
END_TYPE;

TYPE equip_fdn_finish = string;
END_TYPE;

TYPE equip_name = string;
END_TYPE;

TYPE equip_spec_id = string;
END_TYPE;

TYPE equip_test_id = string;
END_TYPE;

TYPE equipment_source = ENUMERATION OF
        (GFE,CFE);
END_TYPE;

TYPE event_description = string;
END_TYPE;

TYPE event_type = ENUMERATION OF
        (creation,modification,deletion);
END_TYPE;

TYPE ex_def_it_sh_d_t = ENUMERATION OF
        (macro,parametric,defined_shape);
END_TYPE;

TYPE ex_def_it_sh_r_t = ENUMERATION OF
        (library,exchange_data_set,unspecified);
```

```
END_TYPE;

TYPE ext_def_item_id = string;
END_TYPE;

TYPE ext_def_item_label = string;
END_TYPE;

TYPE ext_source_label = string;
END_TYPE;

TYPE ext_sp_eng_pt_id = string;
END_TYPE;

TYPE external_source_id = string;
END_TYPE;

TYPE f_d_att_sys_id = string;
END_TYPE;

TYPE fast_set_occur_id = string;
END_TYPE;

TYPE fastener_qty_value = string;
END_TYPE;

TYPE fastener_set_type = string;
END_TYPE;

TYPE fed_stock_no = string;
END_TYPE;

TYPE flat_tol_lngth_val = string;
END_TYPE;

TYPE floor_plate_type = ENUMERATION OF
        (hinged,portable);
END_TYPE;

TYPE flow_rate_value = string;
END_TYPE;

TYPE funct_group_code = string;
END_TYPE;

TYPE funct_id_code = ENUMERATION OF
        (ESWBS,SWBS,HSC,etc);
END_TYPE;

TYPE fw_heat_rate_val = string;
```

```
END_TYPE;

TYPE grating_type = ENUMERATION OF
        (hinged,portable);
END_TYPE;

TYPE i_trd_width_val = string;
END_TYPE;

TYPE i_u_pt_ldr_loc_des = string;
END_TYPE;

TYPE identifier_id = string;
END_TYPE;

TYPE incl_ldr_ang_dk = string;
END_TYPE;

TYPE incl_ldr_handrl_ty = ENUMERATION OF
        (pipe_rails,chain);
END_TYPE;

TYPE incl_ldr_lug_type = ENUMERATION OF
        (upper,lower);
END_TYPE;

TYPE incl_ldr_trd_loc = string;
END_TYPE;

TYPE incl_ldr_trd_space = string;
END_TYPE;

TYPE ins_sheath_perf_id = string;
END_TYPE;

TYPE inst_instruct_id = string;
END_TYPE;

TYPE insul_length_value = string;
END_TYPE;

TYPE insul_type = string;
END_TYPE;

TYPE jnt_fab_reqt_id = string;
END_TYPE;

TYPE jnt_insp_reqt_id = string;
END_TYPE;
```

```
TYPE jnt_joining_sp_id = string;
END_TYPE;

TYPE jnt_test_reqt_id = string;
END_TYPE;

TYPE joining_type_name = ENUMERATION OF
        (weld,solder,rivet,sheet_metal_screw,flange,adhesive,stud,stick_on_pins);
END_TYPE;

TYPE joint_tight_name = string;
END_TYPE;

TYPE label = string;
END_TYPE;

TYPE load_weight_value = string;
END_TYPE;

TYPE lock_type = string;
END_TYPE;

TYPE maint_worth = ENUMERATION OF
        (yes,no);
END_TYPE;

TYPE max_al_dry_wgt_val = string;
END_TYPE;

TYPE max_al_wet_wgt_val = string;
END_TYPE;

TYPE mdlr_sections_id = string;
END_TYPE;

TYPE medium_flow_cond = string;
END_TYPE;

TYPE medium_flow_id = string;
END_TYPE;

TYPE medium_name = string;
END_TYPE;

TYPE mil_std_number = string;
END_TYPE;

TYPE modular_qty = string;
END_TYPE;
```

```
TYPE mt_surf_thk_value = string;
END_TYPE;

TYPE n_s_bhd_att_sys_id = string;
END_TYPE;

TYPE n_s_panel_type = ENUMERATION OF
        (joiner_bulkhead,expanded_metal_bulkhead,
        partition,light_traps,curtain_plates,
        secondary_sheathing);
END_TYPE;

TYPE navsea_dwg_no = string;
END_TYPE;

TYPE number_of_phases = string;
END_TYPE;

TYPE o_f_assy_type = ENUMERATION OF
        (o_and_f_installation_assembly_assembly,o_and_f_fabrication_assembly);
END_TYPE;

TYPE o_f_end_loc_type = string;
END_TYPE;

TYPE o_f_fab_part_id = string;
END_TYPE;

TYPE o_f_fab_piece_id = string;
END_TYPE;

TYPE o_f_test_elem_id = string;
END_TYPE;

TYPE of_dwg_no_org_id = string;
END_TYPE;

TYPE of_end_occ_sh_r_id = string;
END_TYPE;

TYPE of_fastener_type = ENUMERATION OF
        (screw,rivet,gasket,bolt,nut,washer,wing_nut,stud,stick_on_pins,
        stud_caps,turnbuckle,adhesive,tape);
END_TYPE;

TYPE of_joining_type = string;
END_TYPE;

TYPE of_org_dwg_no = string;
END_TYPE;
```

```
TYPE ofp_st_sh_mac_p_n = string;
END_TYPE;

TYPE ofp_std_sh_mac_id = string;
END_TYPE;

TYPE ofp_std_sh_mac_p_v = string;
END_TYPE;

TYPE open_sh_rep_type = string;
END_TYPE;

TYPE oper_cond_descript = string;
END_TYPE;

TYPE organization_id = string;
END_TYPE;

TYPE part_env_id_b = string;
END_TYPE;

TYPE part_env_type_b = ENUMERATION OF
        (insulation,interference,access_maintenance,shock_excursion);
END_TYPE;

TYPE path_arc_id = string;
END_TYPE;

TYPE path_arc_sh_rep_id = string;
END_TYPE;

TYPE path_arc_type = ENUMERATION OF
        (line,arc);
END_TYPE;

TYPE path_nd_sh_rep_id = string;
END_TYPE;

TYPE path_node_id = string;
END_TYPE;

TYPE path_split_id = string;
END_TYPE;

TYPE person_and_org_id = string;
END_TYPE;

TYPE port_ldr_condition = ENUMERATION OF
        (stowed,in_use);
```

```
END_TYPE;

TYPE port_ldr_type = ENUMERATION OF
        (jacobs,pilots);
END_TYPE;

TYPE post_type = ENUMERATION OF
        (ninety_deg_corner,solid_H_port,half_post,forty_five_deg_corner);
END_TYPE;

TYPE power_char_id = string;
END_TYPE;

TYPE power_type = ENUMERATION OF
        (AC,DC,mechanical,hydraulic,pneumatic);
END_TYPE;

TYPE power_value = string;
END_TYPE;

TYPE prod_ver_id = string;
END_TYPE;

TYPE product_id = string;
END_TYPE;

TYPE promotion_level = string;
END_TYPE;

TYPE prot_coat_area_v = string;
END_TYPE;

TYPE prot_coat_color = string;
END_TYPE;

TYPE prot_coat_form_typ = string;
END_TYPE;

TYPE prot_coat_qty = string;
END_TYPE;

TYPE prot_coat_thk_val = string;
END_TYPE;

TYPE prot_coat_type_id = string;
END_TYPE;

TYPE pt_insul_thk_value = string;
END_TYPE;
```

```
TYPE rail_design_type = ENUMERATION OF
        (single_rail,double_rail);
END_TYPE;

TYPE ref_def_source = ENUMERATION OF
        (internal,external);
END_TYPE;

TYPE reserv_flag = string;
END_TYPE;

TYPE reservation_desc = string;
END_TYPE;

TYPE reservation_evt_id = string;
END_TYPE;

TYPE sealant_type_name = ENUMERATION OF
        (silicone,tape,anti_seize_compound,caulking);
END_TYPE;

TYPE sepi_length_value = string;
END_TYPE;

TYPE sepi_thick_value = string;
END_TYPE;

TYPE sepi_width_value = string;
END_TYPE;

TYPE sh_perf_den_value = string;
END_TYPE;

TYPE sh_perf_size_value = string;
END_TYPE;

TYPE sh_rep_style = string;
END_TYPE;

TYPE sh_rep_style_b = string;
END_TYPE;

TYPE sh_rep_style_c = string;
END_TYPE;

TYPE shape_rep_style = ENUMERATION OF
        (detail,arrangement);
END_TYPE;

TYPE shape_rep_style_1 = string;
```

```
END_TYPE;

TYPE shape_rep_style_2 = string;
END_TYPE;

TYPE shape_rep_style_3 = string;
END_TYPE;

TYPE shape_rep_style_a = string;
END_TYPE;

TYPE shape_rep_type = ENUMERATION OF
        (CSG,BREP,three_D_curve_geometry);
END_TYPE;

TYPE shape_rep_type_2 = ENUMERATION OF
        (CSG,BREP,three_D_curve_geometry);
END_TYPE;

TYPE shk_move_inert_val = string;
END_TYPE;

TYPE shk_mv_prd_inrt_v = string;
END_TYPE;

TYPE sp_eng_part_sha_id = string;
END_TYPE;

TYPE sp_eng_pt_open_id = string;
END_TYPE;

TYPE sp_of_end_sh_re_id = string;
END_TYPE;

TYPE sp_open_sh_rep_id = string;
END_TYPE;

TYPE sp_pa_ar_sh_rep_id = string;
END_TYPE;

TYPE sp_pa_nd_sh_rep_st = string;
END_TYPE;

TYPE sp_path_arc_sh_sty = string;
END_TYPE;

TYPE spec_fast_set_id = string;
END_TYPE;

TYPE spec_of_end_type = string;
```

```
END_TYPE;

TYPE spec_open_purpose = string;
END_TYPE;

TYPE spec_part_env_id = string;
END_TYPE;

TYPE spec_part_env_type = ENUMERATION OF
        (insulation,interference,access_maintenance,headroom);
END_TYPE;

TYPE spec_path_arc_id = string;
END_TYPE;

TYPE spec_path_arc_type = ENUMERATION OF
        (line,arc);
END_TYPE;

TYPE spec_path_node_id = string;
END_TYPE;

TYPE specif_standard = string;
END_TYPE;

TYPE spi_id = string;
END_TYPE;

TYPE spiv_relat_context = string;
END_TYPE;

TYPE spiv_relat_type = ENUMERATION OF
        (assembly_prod_struct,design_prod_struct,config_approval,user_defined);
END_TYPE;

TYPE stat_l_d_hgt_value = string;
END_TYPE;

TYPE structural_part_id = string;
END_TYPE;

TYPE surf_fin_location = ENUMERATION OF
        (top,side,upholstery);
END_TYPE;

TYPE surface_finish_id = string;
END_TYPE;

TYPE surface_prep = ENUMERATION OF
        (oxide_free,abrasive_blast_SP10,abrasive_blast_SP5,
```

```
        hand_tool_cleane_SP2,power_tool_cleaned_SP1,light_sanding);
END_TYPE;

TYPE sw_heat_rate_val = string;
END_TYPE;

TYPE sys_oper_cond_id = string;
END_TYPE;

TYPE test_memo_number = string;
END_TYPE;

TYPE test_memo_rev = string;
END_TYPE;

TYPE test_memo_title = string;
END_TYPE;

TYPE test_type = string;
END_TYPE;

TYPE therm_coeff = string;
END_TYPE;

TYPE tot_pt_insl_thk_id = string;
END_TYPE;

TYPE vect_w_mag_id = string;
END_TYPE;

TYPE version = string;
END_TYPE;

TYPE vert_ldr_rung_qty = string;
END_TYPE;

TYPE vertical_extent_id = string;
END_TYPE;

TYPE vib_ampl_value = string;
END_TYPE;

TYPE vib_freq_value = string;
END_TYPE;

TYPE weight_context = ENUMERATION OF
        (estimated,actual,calculated);
END_TYPE;

TYPE weight_type = ENUMERATION OF
```

```
        (wet,dry,operating);
END_TYPE;

TYPE wgt_cond_wgt_value = string;
END_TYPE;


ENTITY ac_power_char
  SUBTYPE OF (power_char);
  has_number_of_phases      : number_of_phases;
  has_ac_frequency_value    : ac_frequency_value;
  has_ac_voltage_value      : ac_voltage_value;
END_ENTITY;

ENTITY acc_ldr_att_pt_occ
  SUBTYPE OF (o_f_fab_part,
        attach_part_occurr,
        acc_ldr_part_occ);
  is_occurr_of_sp_acc_ldr_att_pt : OPTIONAL sp_acc_ldr_att_pt;
END_ENTITY;

ENTITY acc_ldr_maj_pt_occ
  SUPERTYPE OF (weight_line_occ ANDOR
          transp_dolly_occ ANDOR
          tending_line_occ ANDOR
          socket_assy_occ ANDOR
          shackle_occ ANDOR
          rope_occ ANDOR
          platform_occ ANDOR
          lizard_assy_occ ANDOR
          hoist_occ ANDOR
          fender_occ ANDOR
          davit_occ ANDOR
          bridle_assy_occ ANDOR
          bracket_assy_occ ANDOR
          accom_ldr_occ)
  SUBTYPE OF (o_f_part_occurr,
        acc_ldr_part_occ);
  is_occur_of_spec_acc_ldr_part : OPTIONAL spec_acc_ldr_part;
END_ENTITY;

ENTITY acc_ldr_part_occ
  SUPERTYPE OF (acc_ldr_maj_pt_occ ANDOR
          acc_ldr_att_pt_occ);
  has_acc_ldr_iu_pt_loc     : acc_ldr_iu_pt_loc;
  is_connected_to_acc_ldr_part_occ : OPTIONAL SET [1:?] OF acc_ldr_part_occ;
  is_conn_to_acc_ldr_part_occ : OPTIONAL SET [1:?] OF acc_ldr_part_occ;
  is_connected_to_hull_ftg_occurr : OPTIONAL SET [1:?] OF hull_ftg_occurr;
  is_connected_to_eng_part_occur : OPTIONAL SET [1:?] OF eng_part_occur;
  is_conn_by_attachment_occurr : OPTIONAL SET [1:?] OF attachment_occurr;
```

```
  of_accomm_lad_sys_occ     : OPTIONAL SET [1:?] OF accomm_lad_sys_occ;
END_ENTITY;

ENTITY access_dev_occurr
  SUPERTYPE OF (grating_occurrence ANDOR
                floor_plate_occ ANDOR
                door_occurrence)
  SUBTYPE OF (device_occurr);
END_ENTITY;

ENTITY accom_ldr_occ
  SUBTYPE OF (acc_ldr_maj_pt_occ);
  has_acc_ldr_tread_qty     : acc_ldr_tread_qty;
END_ENTITY;

ENTITY accomm_lad_sys_occ
  SUBTYPE OF (o_f_system_occurr);
  has_acc_ldr_part_occ      : OPTIONAL SET [1:?] OF acc_ldr_part_occ;
END_ENTITY;

ENTITY approval_event;
  of_approval_relat         : OPTIONAL approval_relat;
  has_status_n_approval_status : n_approval_status;
  assigned_on_n_date_and_time : n_date_and_time;
UNIQUE
  assigned_on_n_date_and_time,
    has_status_n_approval_status;
END_ENTITY;

ENTITY approval_relat
  SUBTYPE OF (spiv_relationship);
  has_approval_event        : SET [1:?] OF approval_event;
  has_appl_context_config_spiv : config_spiv;
END_ENTITY;

ENTITY approval_status
  SUPERTYPE OF (n_approval_status);
  with_approval_status_id   : approval_status_id;
UNIQUE
  with_approval_status_id;
END_ENTITY;

ENTITY assembly_end;
  has_assy_end_prep         : OPTIONAL assy_end_prep;
  has_o_f_end_occur         : o_f_end_occur;
  of_o_f_assembly_occur     : o_f_assembly_occur;
UNIQUE
  of_o_f_assembly_occur,
    has_o_f_end_occur;
END_ENTITY;
```

```
ENTITY assembly_occurr
  SUPERTYPE OF (o_f_assembly_occur)
  SUBTYPE OF (product_spiv_occur);
END_ENTITY;

ENTITY assy_assy_instruct
  SUBTYPE OF (assy_instruction);
  of_o_f_assembly_occur     : OPTIONAL o_f_assembly_occur;
END_ENTITY;

ENTITY assy_coat_instruct
  SUBTYPE OF (assy_instruction);
  of_o_f_assembly_occur     : OPTIONAL o_f_assembly_occur;
END_ENTITY;

ENTITY assy_install_instr
  SUBTYPE OF (assy_instruction);
  of_o_f_assembly_occur     : OPTIONAL o_f_assembly_occur;
END_ENTITY;

ENTITY assy_instruction
  SUPERTYPE OF (assy_insul_instr ANDOR
                assy_install_instr ANDOR
                assy_coat_instruct ANDOR
                assy_assy_instruct);
  has_assy_instr_descrip    : OPTIONAL assy_instr_descrip;
  has_assy_instr_no         : assy_instr_no;
  has_assy_instr_type       : assy_instr_type;
UNIQUE
  has_assy_instr_type,
    has_assy_instr_no;
END_ENTITY;

ENTITY assy_insul_instr
  SUBTYPE OF (assy_instruction);
  of_o_f_assembly_occur     : OPTIONAL o_f_assembly_occur;
END_ENTITY;

ENTITY attach_end_occurr
  SUPERTYPE OF (spec_insul_part ANDOR
                ind_att_end ANDOR
                depend_attach_end)
  SUBTYPE OF (end_spiv_occurr);
  attached_insul_part_occurr : OPTIONAL insul_part_occurr;
END_ENTITY;

ENTITY attach_part_occurr
  SUPERTYPE OF (n_s_bhd_att_pt_occ ANDOR
                insul_part_occurr ANDOR
```

```
            acc_ldr_att_pt_occ)
  SUBTYPE OF (discr_part_occurr);
(*  implements_attach_penet_obj : OPTIONAL SET [1:?] OF attach_penet_obj;*)
END_ENTITY;

ENTITY attach_penet_obj;
  implemented_by_eng_part_occur_ext : OPTIONAL eng_part_occur_ext;
  implemented_by_attach_part_occurr : OPTIONAL attach_part_occurr;
  implemented_by_eng_part_occur : OPTIONAL eng_part_occur;
  implemented_by_structural_part : OPTIONAL structural_part;
  attaches_via_depend_attach_end : OPTIONAL SET [1:?] OF depend_attach_end;
WHERE
  has_at_most_one_of (implemented_by_attach_part_occurr,
                  implemented_by_structural_part);
  has_at_most_one_of (implemented_by_eng_part_occur,
                  implemented_by_attach_part_occurr);
  has_at_most_one_of (implemented_by_eng_part_occur_ext,
                  implemented_by_structural_part);
  has_at_most_one_of (implemented_by_structural_part,
                  implemented_by_eng_part_occur);
END_ENTITY;

ENTITY attach_posit_dep;
  has_indep_att_of_attachment_occurr : attachment_occurr;
  has_dep_attach_of_attachment_occurr : attachment_occurr;
UNIQUE
  has_dep_attach_of_attachment_occurr,
    has_indep_att_of_attachment_occurr;
END_ENTITY;

ENTITY attachment_config
  SUPERTYPE OF (ONEOF(edge,
            face,
            vertex));
  has_attach_config_id       : attach_config_id;
  has_attach_config_func   : attach_config_func;
  has_att_conf_dim           : att_conf_dim;
  is_config_of_attachment_occurr : SET [1:?] OF attachment_occurr;
UNIQUE
  has_attach_config_id;
END_ENTITY;

ENTITY attachment_occurr
  SUBTYPE OF (interf_spiv_occurr);
  connects_acc_ldr_part_occ : OPTIONAL SET [1:?] OF acc_ldr_part_occ;
  connects_cl_saf_rl_bkt_occ : OPTIONAL cl_saf_rl_bkt_occ;
  connects_climb_saf_rail_occ : OPTIONAL climb_saf_rail_occ;
  connects_vert_ldr_clip_occ : OPTIONAL vert_ldr_clip_occ;
  connects_vert_ladder_occur : OPTIONAL vert_ladder_occur;
  connects_incl_ldr_lug_occur : OPTIONAL incl_ldr_lug_occur;
```

```
  gives_posit_to_attach_posit_dep : OPTIONAL SET [1:?] OF attach_posit_dep;
  gets_ref_geom_from_ind_att_end : OPTIONAL SET [1:?] OF ind_att_end;
  has_depend_end_depend_attach_end : OPTIONAL SET [1:?] OF depend_attach_end;
  posit_dep_on_attach_posit_dep : OPTIONAL SET [1:?] OF attach_posit_dep;
  has_attachment_occurr     : OPTIONAL SET [1:?] OF attachment_occurr;
  of_attachment_occurr      : OPTIONAL attachment_occurr;
  has_config_of_attachment_config : OPTIONAL attachment_config;
UNIQUE
  connects_vert_ldr_clip_occ;
WHERE
  has_at_most_one_of (posit_dep_on_attach_posit_dep,
                      gives_posit_to_attach_posit_dep);
END_ENTITY;

ENTITY attd_penet_obj;
  used_to_der_geom_part_env_occ_sh_rp : OPTIONAL part_env_occ_sh_rp;
  is_occurr_of_spec_eng_part : OPTIONAL spec_eng_part;
  x_sect_red_by_int_insul_env : OPTIONAL int_insul_env;
  implemented_by_o_f_intercon_occ : OPTIONAL o_f_intercon_occ;
  implemented_by_eng_part_occur : OPTIONAL eng_part_occur;
  implemented_by_structural_part : OPTIONAL structural_part;
  implemented_by_eng_part_occur_ext : OPTIONAL eng_part_occur_ext;
  attached_via_ind_att_end  : OPTIONAL SET [1:?] OF ind_att_end;
UNIQUE
  used_to_der_geom_part_env_occ_sh_rp;
WHERE
  has_at_least_one_of (used_to_der_geom_part_env_occ_sh_rp,
                       is_occurr_of_spec_eng_part);
  has_at_most_one_of (used_to_der_geom_part_env_occ_sh_rp,
                      is_occurr_of_spec_eng_part);
  has_at_most_one_of (implemented_by_o_f_intercon_occ,
                      implemented_by_structural_part);
  has_at_most_one_of (implemented_by_eng_part_occur,
                      implemented_by_o_f_intercon_occ);
  has_at_most_one_of (implemented_by_eng_part_occur_ext,
                      implemented_by_structural_part);
  has_at_most_one_of (implemented_by_structural_part,
                      implemented_by_eng_part_occur);
END_ENTITY;

ENTITY bot_shl_dr_plug_oc
  SUBTYPE OF (o_f_part_occurr);
END_ENTITY;

ENTITY bracket_assy_occ
  SUBTYPE OF (acc_ldr_maj_pt_occ);
END_ENTITY;

ENTITY bridle_assy_occ
  SUBTYPE OF (acc_ldr_maj_pt_occ);
```

```
END_ENTITY;

ENTITY c_o_g;
  irb_c_o_g_id              : c_o_g_id;
  of_weight_condition       : OPTIONAL SET [1:?] OF weight_condition;
UNIQUE
  irb_c_o_g_id;
END_ENTITY;

ENTITY ceiling_attach_sys;
  irb_ceiling_att_sys_id    : ceiling_att_sys_id;
  has_o_f_fab_part          : OPTIONAL SET [1:?] OF o_f_fab_part;
  connects_ceiling_sys_occ  : OPTIONAL SET [1:?] OF ceiling_sys_occ;
UNIQUE
  irb_ceiling_att_sys_id;
END_ENTITY;

ENTITY ceiling_panel_occ
  SUBTYPE OF (o_f_part_occurr);
  is_occur_of_spec_ceiling_panel : spec_ceiling_panel;
  of_ceiling_sys_occ        : ceiling_sys_occ;
END_ENTITY;

ENTITY ceiling_sys_occ
  SUBTYPE OF (o_f_system_occurr);
  connects_via_ceiling_attach_sys : OPTIONAL SET [1:?] OF ceiling_attach_sys;
  has_ceiling_panel_occ     : OPTIONAL SET [1:?] OF ceiling_panel_occ;
  defines_vertical_extent   : OPTIONAL vertical_extent;
  is_connected_to_eng_part_occur : OPTIONAL SET [1:?] OF eng_part_occur;
  is_conn_to_structural_part : OPTIONAL SET [1:?] OF structural_part;
END_ENTITY;

ENTITY change;
  has_change_type           : OPTIONAL change_type;
  has_adjudicated_cost      : OPTIONAL cost;
  authorizing_authy_n_organization : SET [1:?] OF n_organization;
  has_org_change_id         : OPTIONAL SET [1:?] OF org_change_id;
  has_change_id_n_identifier : n_identifier;
  has_change_stat_event     : SET [1:?] OF change_stat_event;
  authorizes_n_person_and_org : OPTIONAL n_person_and_org;
  has_chosen_change_alternative : OPTIONAL change_alternative;
  can_be_satisf_by_change_alternative : OPTIONAL SET [1:?] OF change_alternative;
  is_incorporated_in_configuration_chg : OPTIONAL SET [1:?] OF configuration_chg;
  has_cre_mod_del_event     : OPTIONAL SET [1:?] OF cre_mod_del_event;
UNIQUE
  has_change_id_n_identifier;
  has_chosen_change_alternative;
END_ENTITY;

ENTITY change_alternative;
```

```
  has_estimated_cost        : OPTIONAL cost;
  potent_impacts_potential_spiv_chg : OPTIONAL SET [1:?] OF potential_spiv_chg;
  is_chosen_for_change      : OPTIONAL change;
  satisfies_change          : change;
  chg_altern_id_n_identifier : n_identifier;
UNIQUE
  is_chosen_for_change;
  chg_altern_id_n_identifier;
END_ENTITY;

ENTITY change_stat_event;
  has_change_status         : change_status;
  of_change                 : change;
  occurred_n_date_and_time  : n_date_and_time;
UNIQUE
  occurred_n_date_and_time,
    has_change_status;
END_ENTITY;

ENTITY channel_insert_occ
  SUBTYPE OF (fab_o_f_part_occ);
END_ENTITY;

ENTITY channel_occur
  SUBTYPE OF (fab_o_f_part_occ);
END_ENTITY;

ENTITY cl_saf_rl_bkt_occ
  SUBTYPE OF (o_f_fab_part);
  conn_to_structural_part   : OPTIONAL SET [1:?] OF structural_part;
  connected_by_attachment_occurr : OPTIONAL SET [1:?] OF attachment_occurr;
  connects_climb_saf_rail_occ : OPTIONAL climb_saf_rail_occ;
WHERE
  has_all_or_none_of (connected_by_attachment_occurr,
                      conn_to_structural_part);
END_ENTITY;

ENTITY climb_saf_rail_occ
  SUBTYPE OF (o_f_part_occurr);
  connected_by_cl_saf_rl_bkt_occ : OPTIONAL SET [1:?] OF cl_saf_rl_bkt_occ;
  connected_by_attachment_occurr : OPTIONAL SET [1:?] OF attachment_occurr;
  is_occur_of_spec_climb_saf_rl : OPTIONAL spec_climb_saf_rl;
WHERE
  has_all_or_none_of (connected_by_cl_saf_rl_bkt_occ,
                      connected_by_attachment_occurr);
END_ENTITY;

ENTITY comp_ext_boundary
  SUBTYPE OF (compart_boundary);
  has_comp_ext_bound_nam    : OPTIONAL comp_ext_bound_nam;
```

```
END_ENTITY;

ENTITY compart_boundary
  SUPERTYPE OF (comp_ext_boundary)
  SUBTYPE OF (space_end_occurr);
  has_comp_height_value     : OPTIONAL comp_height_value;
  has_comp_width_value      : OPTIONAL comp_width_value;
  has_comp_boundary_side    : OPTIONAL comp_boundary_side;
  of_compartment_interf     : OPTIONAL compartment_interf;
  of_compartment_occurr     : OPTIONAL compartment_occurr;
END_ENTITY;

ENTITY compart_tight_t_e
  SUBTYPE OF (o_f_test_element);
  has_compartment_occurr    : SET [1:?] OF compartment_occurr;
END_ENTITY;

ENTITY compartment_interf
  SUBTYPE OF (interf_spiv_occurr);
  has_compart_boundary      : SET [1:?] OF compart_boundary;
END_ENTITY;

ENTITY compartment_occurr
  SUBTYPE OF (space_spiv_occurr);
  has_compart_tight_crit    : OPTIONAL compart_tight_crit;
  has_compartment_name      : OPTIONAL compartment_name;
  has_compart_number        : OPTIONAL compart_number;
  has_compart_boundary      : OPTIONAL SET [1:?] OF compart_boundary;
  of_compart_tight_t_e      : OPTIONAL compart_tight_t_e;
UNIQUE
  has_compart_number;
END_ENTITY;

ENTITY component_spi
  SUBTYPE OF (spi);
  of_component_spiv         : component_spiv;
END_ENTITY;

ENTITY component_spiv
  SUBTYPE OF (spiv);
  has_component_spi         : OPTIONAL SET [1:?] OF component_spi;
  is_component_in_spiv_relationship : OPTIONAL SET [1:?] OF spiv_relationship;
END_ENTITY;

ENTITY config_spi
  SUBTYPE OF (context_spi);
  has_config_spiv           : OPTIONAL SET [1:?] OF config_spiv;
END_ENTITY;

ENTITY config_spiv
```

```
  SUBTYPE OF (context_spiv);
  has_owner_n_person_and_org : n_person_and_org;
  is_appl_cont_for_approval_relat : OPTIONAL SET [1:?] OF approval_relat;
  of_config_spi            : OPTIONAL config_spi;
  incorporates_configuration_chg : OPTIONAL SET [1:?] OF configuration_chg;
END_ENTITY;

ENTITY configuration_chg;
  has_chg_rev_status       : chg_rev_status;
  incorporates_change      : change;
  of_config_spiv           : config_spiv;
UNIQUE
  of_config_spiv,
    incorporates_change;
END_ENTITY;

ENTITY context_spi
  SUPERTYPE OF (config_spi)
  SUBTYPE OF (spi);
END_ENTITY;

ENTITY context_spiv
  SUPERTYPE OF (config_spiv)
  SUBTYPE OF (spiv);
  is_context_in_spiv_relationship : OPTIONAL SET [1:?] OF spiv_relationship;
END_ENTITY;

ENTITY cre_mod_del_event;
  has_event_type           : OPTIONAL event_type;
  has_event_description    : OPTIONAL event_description;
  performed_by_n_person_and_org : OPTIONAL n_person_and_org;
  of_change                : OPTIONAL change;
  used_as_baseline_spiv    : spiv;
  causes_cr_mod_del_spiv   : spiv;
  has_n_date_and_time      : n_date_and_time;
  checked_by_n_person_and_org : OPTIONAL n_person_and_org;
UNIQUE
  causes_cr_mod_del_spiv,
    has_n_date_and_time;
END_ENTITY;

ENTITY date_and_time
  SUPERTYPE OF (n_date_and_time);
  with_date_and_time_id    : date_and_time_id;
UNIQUE
  with_date_and_time_id;
END_ENTITY;

ENTITY davit_occ
  SUBTYPE OF (acc_ldr_maj_pt_occ);
```

```
END_ENTITY;

ENTITY dc_power_char
  SUBTYPE OF (power_char);
  has_dc_voltage_value      : dc_voltage_value;
END_ENTITY;

ENTITY dec_chips_occ
  SUBTYPE OF (o_f_part_occurr);
  of_deck_cov_sys_occur     : OPTIONAL SET [1:?] OF deck_cov_sys_occur;
END_ENTITY;

ENTITY deck_cov_occurr
  SUBTYPE OF (o_f_part_occurr);
  irb_deck_cov_layer_no     : deck_cov_layer_no;
  has_dk_cov_thk_value      : dk_cov_thk_value;
  covers_eng_part_occur_ext : OPTIONAL eng_part_occur_ext;
  covers_eng_part_occur     : OPTIONAL eng_part_occur;
  has_prot_coat_occurr      : OPTIONAL prot_coat_occurr;
  is_occur_of_spec_deck_cover : OPTIONAL SET [1:?] OF spec_deck_cover;
  of_deck_cov_sys_occur     : deck_cov_sys_occur;
END_ENTITY;

ENTITY deck_cov_sys_occur
  SUBTYPE OF (o_f_system_occurr);
  has_dk_cov_surf_prep      : dk_cov_surf_prep;
  has_deck_cov_edge_rqt     : deck_cov_edge_rqt;
  has_dk_cover_cov_area     : dk_cover_cov_area;
  has_dk_cov_layer_qty      : dk_cov_layer_qty;
  has_dec_chips_occ         : dec_chips_occ;
  has_strips_occur          : strips_occur;
  has_deck_cov_occurr       : OPTIONAL SET [1:?] OF deck_cov_occurr;
END_ENTITY;

ENTITY deflect_cover_occ
  SUBTYPE OF (n_s_bhd_att_pt_occ);
END_ENTITY;

ENTITY depend_attach_end
  SUBTYPE OF (attach_end_occurr);
  attaches_attach_penet_obj : attach_penet_obj;
  is_depend_end_in_attachment_occurr : attachment_occurr;
UNIQUE
  attaches_attach_penet_obj,
    is_depend_end_in_attachment_occurr;
END_ENTITY;

ENTITY device_occurr
  SUPERTYPE OF (access_dev_occurr ANDOR
                equip_occurr ANDOR
```

```
            window_occurr)
  SUBTYPE OF (eng_part_occur);
  of_o_f_system_occurr      : OPTIONAL o_f_system_occurr;
END_ENTITY;

ENTITY disc_system_occurr
  SUBTYPE OF (eng_system_occurr);
END_ENTITY;

ENTITY discr_part_occurr
  SUPERTYPE OF (attach_part_occurr)
  SUBTYPE OF (eng_part_occur);
  of_o_f_system_occurr      : OPTIONAL o_f_system_occurr;
END_ENTITY;

ENTITY door_att_sys;
  irb_door_att_sys_id       : door_att_sys_id;
  has_o_f_fab_part          : OPTIONAL SET [1:?] OF o_f_fab_part;
  connects_door_occurrence  : OPTIONAL SET [1:?] OF door_occurrence;
UNIQUE
  irb_door_att_sys_id;
END_ENTITY;

ENTITY door_occurrence
  SUBTYPE OF (access_dev_occurr);
  has_door_type             : OPTIONAL SET [1:?] OF door_type;
  connects_via_door_att_sys : OPTIONAL SET [1:?] OF door_att_sys;
  is_occ_of_specific_door   : specific_door;
  is_conn_to_eng_part_occur : OPTIONAL SET [1:?] OF eng_part_occur;
  is_conn_to_structural_part : OPTIONAL SET [1:?] OF structural_part;
END_ENTITY;

ENTITY edge
  SUBTYPE OF (attachment_config);
END_ENTITY;

ENTITY elect_ins_res_t_e
  SUBTYPE OF (o_f_test_element);
  has_eng_part_occur        : SET [1:?] OF eng_part_occur;
END_ENTITY;

ENTITY end_spiv_occurr
  SUPERTYPE OF (attach_end_occurr ANDOR
            (ONEOF(o_f_end_occur,
             space_end_occurr)))
  SUBTYPE OF (occurrence_spiv);
END_ENTITY;

ENTITY eng_part_external;
  with_eng_part_extrnl_id   : eng_part_extrnl_id;
```

```
  is_conn_to_n_s_bhd_sys_occur : OPTIONAL SET [1:?] OF n_s_bhd_sys_occur;
UNIQUE
  with_eng_part_extrnl_id;
END_ENTITY;

ENTITY eng_part_occ_des
  SUBTYPE OF (eng_part_occur);
  with_ep_org_dwg_fn        : OPTIONAL ep_org_dwg_fn;
  has_ep_org_dwg_no         : OPTIONAL ep_org_dwg_no;
  has_ep_dwg_no_org_id      : OPTIONAL ep_dwg_no_org_id;
  has_max_al_dry_wgt_val    : OPTIONAL max_al_dry_wgt_val;
  has_max_al_wet_wgt_val    : OPTIONAL max_al_wet_wgt_val;
  has_ep_rqd_shock_class    : OPTIONAL ep_rqd_shock_class;
  has_ep_location_descr     : OPTIONAL ep_location_descr;
  has_funct_group_code      : OPTIONAL funct_group_code;
  has_funct_id              : OPTIONAL funct_id;
END_ENTITY;

ENTITY eng_part_occ_imp
  SUBTYPE OF (eng_part_occur);
  has_maint_worth           : OPTIONAL maint_worth;
END_ENTITY;

ENTITY eng_part_occur
  SUPERTYPE OF (o_f_part_occurr ANDOR
                eng_part_occ_imp ANDOR
                eng_part_occ_des ANDOR
                discr_part_occurr ANDOR
                device_occurr)
  SUBTYPE OF (product_spiv_occur);
  is_conn_to_door_occurrence : OPTIONAL SET [1:?] OF door_occurrence;
  is_connected_to_handrail_sys_occur : OPTIONAL SET [1:?] OF handrail_sys_occur;
  has_shape_of_ep_occ_sh_rep : OPTIONAL SET [1:?] OF ep_occ_sh_rep;
  connects_at_o_f_end_occur : OPTIONAL SET [1:?] OF o_f_end_occur;
  has_env_of_part_env_occ_sh_rp : OPTIONAL part_env_occ_sh_rp;
  is_covered_by_deck_cov_occurr : OPTIONAL SET [1:?] OF deck_cov_occurr;
  is_occur_of_spec_eng_part : OPTIONAL spec_eng_part;
  is_connected_to_acc_ldr_part_occ : OPTIONAL SET [1:?] OF acc_ldr_part_occ;
  is_connected_to_false_deck_sys_occ : OPTIONAL SET [1:?] OF false_deck_sys_occ;
  is_connected_to_ceiling_sys_occ : OPTIONAL SET [1:?] OF ceiling_sys_occ;
  is_conn_to_n_s_bhd_sys_occur : OPTIONAL SET [1:?] OF n_s_bhd_sys_occur;
  of_o_f_assembly_occur     : OPTIONAL o_f_assembly_occur;
  of_strength_tight_t_e     : OPTIONAL strength_tight_t_e;
  of_sound_fit_func_t_e     : OPTIONAL sound_fit_func_t_e;
  of_stat_load_drop_t_e     : OPTIONAL stat_load_drop_t_e;
  of_operational_t_e        : OPTIONAL operational_t_e;
  of_elect_ins_res_t_e      : OPTIONAL elect_ins_res_t_e;
  implements_attd_penet_obj : OPTIONAL SET [1:?] OF attd_penet_obj;
  implements_attach_penet_obj : OPTIONAL SET [1:?] OF attach_penet_obj;
END_ENTITY;
```

```
ENTITY eng_part_occur_ext;
  with_eng_pt_occ_ext_id    : eng_pt_occ_ext_id;
  is_connected_to_handrail_sys_occur : OPTIONAL SET [1:?] OF handrail_sys_occur;
  is_covered_by_deck_cov_occurr : OPTIONAL SET [1:?] OF deck_cov_occurr;
  implements_attach_penet_obj : OPTIONAL SET [1:?] OF attach_penet_obj;
  implements_attd_penet_obj : OPTIONAL SET [1:?] OF attd_penet_obj;
UNIQUE
  with_eng_pt_occ_ext_id;
END_ENTITY;

ENTITY eng_system_occurr
  SUPERTYPE OF (o_f_system_occurr ANDOR
              disc_system_occurr)
  SUBTYPE OF (product_spiv_occur);
  has_funct_id_funct_id     : OPTIONAL SET [1:?] OF funct_id;
END_ENTITY;

ENTITY envelope_occurr
  SUPERTYPE OF (removal_rt_env_occ)
  SUBTYPE OF (space_spiv_occurr);
END_ENTITY;

ENTITY ep_identifier;
  has_ep_org_part_no        : ep_org_part_no;
  has_ep_part_no_org_id     : ep_part_no_org_id;
  of_spec_eng_part_impl     : OPTIONAL SET [1:?] OF spec_eng_part_impl;
UNIQUE
  has_ep_part_no_org_id,
    has_ep_org_part_no;
END_ENTITY;

ENTITY ep_occ_sh_rep;
  has_ep_occ_sh_rep_type    : OPTIONAL ep_occ_sh_rep_type;
  is_rep_by_ep_occ_shap_rep_id : ep_occ_shap_rep_id;
  has_shape_rep_style_3     : OPTIONAL shape_rep_style_3;
  is_shape_of_eng_part_occur : eng_part_occur;
UNIQUE
  is_rep_by_ep_occ_shap_rep_id;
END_ENTITY;

ENTITY eq_fix_mount_data
  SUBTYPE OF (equip_mount_data);
  has_eq_fix_mount_type     : OPTIONAL eq_fix_mount_type;
  has_mt_surf_thk_value     : OPTIONAL mt_surf_thk_value;
END_ENTITY;

ENTITY eq_install_inst;
  has_inst_instruct_id      : inst_instruct_id;
  of_equip_occ_implem       : OPTIONAL equip_occ_implem;
```

```
UNIQUE
  has_inst_instruct_id;
END_ENTITY;

ENTITY eq_interchange;
  irb_eq_description        : eq_description;
  of_spec_equipment         : spec_equipment;
UNIQUE
  of_spec_equipment,
    irb_eq_description;
END_ENTITY;

ENTITY eq_remov_rte_instr;
  has_eq_rem_instr_id       : eq_rem_instr_id;
  refers_to_removal_rt_env_occ : OPTIONAL removal_rt_env_occ;
  of_equip_occ_implem       : OPTIONAL equip_occ_implem;
UNIQUE
  has_eq_rem_instr_id;
END_ENTITY;

ENTITY eq_res_mount_data
  SUBTYPE OF (equip_mount_data);
  has_eq_res_mt_spec_id     : eq_res_mt_spec_id;
  has_eq_shk_move_dir       : OPTIONAL eq_shk_move_dir;
UNIQUE
  has_eq_res_mt_spec_id;
END_ENTITY;

ENTITY eq_shk_move_dir;
  has_eq_shk_mov_dir_id     : eq_shk_mov_dir_id;
  has_shk_mv_prd_inrt_v     : OPTIONAL shk_mv_prd_inrt_v;
  has_shk_move_inert_val    : OPTIONAL shk_move_inert_val;
  has_shock_move_vector_w_magnitude : vector_w_magnitude;
  of_eq_res_mount_data      : OPTIONAL SET [1:?] OF eq_res_mount_data;
UNIQUE
  has_eq_shk_mov_dir_id;
END_ENTITY;

ENTITY eq_sy_oper_cond;
  has_fw_heat_rate_val      : OPTIONAL fw_heat_rate_val;
  has_sw_heat_rate_val      : OPTIONAL sw_heat_rate_val;
  has_air_heat_rate_val     : OPTIONAL air_heat_rate_val;
  of_system_oper_cond       : system_oper_cond;
  has_medium_flow           : OPTIONAL SET [1:?] OF medium_flow;
  of_equip_oper_cond        : equip_oper_cond;
UNIQUE
  of_system_oper_cond,
    of_equip_oper_cond;
END_ENTITY;
```

```
ENTITY equal_angle_occur
  SUBTYPE OF (fab_o_f_part_occ);
END_ENTITY;

ENTITY equip_appl_specs;
  has_equip_spec_id        : equip_spec_id;
  of_equip_occ_design       : equip_occ_design;
UNIQUE
  has_equip_spec_id;
END_ENTITY;

ENTITY equip_mount_data
  SUPERTYPE OF (ONEOF(eq_fix_mount_data,
              eq_res_mount_data));
  is_rep_by_eq_mnt_data_id  : eq_mnt_data_id;
  of_equip_mounting         : OPTIONAL SET [1:?] OF equip_mounting;
UNIQUE
  is_rep_by_eq_mnt_data_id;
END_ENTITY;

ENTITY equip_mounting;
  of_equip_occ_implem       : equip_occ_implem;
  has_equip_mount_data      : equip_mount_data;
UNIQUE
  has_equip_mount_data,
    of_equip_occ_implem;
END_ENTITY;

ENTITY equip_occ_design
  SUBTYPE OF (equip_occurr);
  has_insul_length_value    : OPTIONAL insul_length_value;
  has_des_temp_value        : OPTIONAL des_temp_value;
  has_des_pressure_value    : OPTIONAL des_pressure_value;
  has_equip_name            : OPTIONAL SET [1:?] OF equip_name;
  has_eq_reqd_insul_type    : OPTIONAL eq_reqd_insul_type;
  has_eq_sy_conf_spec_id    : OPTIONAL eq_sy_conf_spec_id;
  has_equip_reqd_test       : OPTIONAL SET [1:?] OF equip_reqd_test;
  has_equip_oper_cond       : OPTIONAL SET [1:?] OF equip_oper_cond;
  has_equip_appl_specs      : OPTIONAL SET [1:?] OF equip_appl_specs;
END_ENTITY;

ENTITY equip_occ_implem
  SUBTYPE OF (equip_occurr);
  has_eq_remov_rte_instr    : OPTIONAL SET [1:?] OF eq_remov_rte_instr;
  has_equip_mounting        : OPTIONAL SET [1:?] OF equip_mounting;
  has_eq_install_inst       : OPTIONAL SET [1:?] OF eq_install_inst;
END_ENTITY;

ENTITY equip_occurr
  SUPERTYPE OF (equip_occ_implem ANDOR
```

```
            equip_occ_design)
  SUBTYPE OF (device_occurr);
  is_occur_of_spec_equipment : spec_equipment;
END_ENTITY;

ENTITY equip_oper_cond;
  has_eq_oper_cond_id       : eq_oper_cond_id;
  has_vib_ampl_value        : OPTIONAL vib_ampl_value;
  has_vib_freq_value        : OPTIONAL vib_freq_value;
  has_eq_oper_cond_desc     : OPTIONAL eq_oper_cond_desc;
  of_equip_occ_design       : equip_occ_design;
  has_eq_sy_oper_cond       : OPTIONAL SET [1:?] OF eq_sy_oper_cond;
UNIQUE
  has_eq_oper_cond_id;
  has_eq_oper_cond_desc;
END_ENTITY;

ENTITY equip_reqd_test;
  has_equip_test_id         : equip_test_id;
  of_equip_occ_design       : OPTIONAL equip_occ_design;
UNIQUE
  has_equip_test_id;
END_ENTITY;

ENTITY ext_def_item
  SUPERTYPE OF (n_ex_def_item);
  irb_ext_def_item_id       : ext_def_item_id;
  name_ext_def_item_label   : ext_def_item_label;
  source_external_source    : external_source;
UNIQUE
  irb_ext_def_item_id;
END_ENTITY;

ENTITY ext_insul_env
  SUBTYPE OF (insul_part_occurr);
END_ENTITY;

ENTITY external_source;
  irb_external_source_id    : external_source_id;
  name_ext_source_label     : ext_source_label;
  of_ext_def_item           : OPTIONAL SET [1:?] OF ext_def_item;
UNIQUE
  irb_external_source_id;
END_ENTITY;

ENTITY external_sp_eng_pt;
  with_ext_sp_eng_pt_id     : ext_sp_eng_pt_id;
  is_coated_by_prot_coat_sys_occu : OPTIONAL SET [1:?] OF prot_coat_sys_occu;
UNIQUE
  with_ext_sp_eng_pt_id;
```

```
END_ENTITY;

ENTITY external_spiv
  SUBTYPE OF (spiv);
  is_defined_by_n_ex_def_item : n_ex_def_item;
UNIQUE
  is_defined_by_n_ex_def_item;
END_ENTITY;

ENTITY f_d_att_sys;
  irb_f_d_att_sys_id        : f_d_att_sys_id;
UNIQUE
  irb_f_d_att_sys_id;
END_ENTITY;

ENTITY f_d_panel_occ
  SUBTYPE OF (o_f_part_occurr);
  is_occ_of_spec_f_d_panel  : spec_f_d_panel;
  of_false_deck_sys_occ     : false_deck_sys_occ;
END_ENTITY;

ENTITY fab_o_f_part_occ
  SUPERTYPE OF (sheet_occur ANDOR
              round_bar_occur ANDOR
              ret_split_ring_occ ANDOR
              pipe_occur ANDOR
              hinge_occur ANDOR
              flat_bar_occur ANDOR
              equal_angle_occur ANDOR
              channel_occur ANDOR
              channel_insert_occ);
END_ENTITY;

ENTITY face
  SUBTYPE OF (attachment_config);
END_ENTITY;

ENTITY false_deck_att_sys;
  has_o_f_fab_part          : OPTIONAL SET [1:?] OF o_f_fab_part;
  connects_false_deck_sys_occ : OPTIONAL SET [1:?] OF false_deck_sys_occ;
END_ENTITY;

ENTITY false_deck_sys_occ
  SUBTYPE OF (o_f_system_occurr);
  connects_via_false_deck_att_sys : OPTIONAL SET [1:?] OF false_deck_att_sys;
  has_f_d_panel_occ         : OPTIONAL SET [1:?] OF f_d_panel_occ;
  is_connected_to_eng_part_occur : OPTIONAL SET [1:?] OF eng_part_occur;
  is_connected_to_structural_part : OPTIONAL SET [1:?] OF structural_part;
END_ENTITY;
```

```
ENTITY fastener_quantity;
  with_fastener_qty_value   : fastener_qty_value;
  of_fastener_usage         : OPTIONAL SET [1:?] OF fastener_usage;
UNIQUE
  with_fastener_qty_value;
END_ENTITY;

ENTITY fastener_set_occur;
  is_rep_by_fast_set_occur_id : fast_set_occur_id;
  is_rep_by_fastener_set_type : fastener_set_type;
  is_occur_of_spec_fastener_set : spec_fastener_set;
  is_used_by_interf_spiv_occurr : interf_spiv_occurr;
UNIQUE
  is_rep_by_fast_set_occur_id;
  is_used_by_interf_spiv_occurr;
END_ENTITY;

ENTITY fastener_set_usage;
  has_member_fastener_usage : fastener_usage;
  is_comp_of_spec_fastener_set : spec_fastener_set;
UNIQUE
  has_member_fastener_usage,
    is_comp_of_spec_fastener_set;
END_ENTITY;

ENTITY fastener_usage;
  uses_spec_o_f_fastener    : OPTIONAL spec_o_f_fastener;
  is_member_of_fastener_set_usage : SET [1:?] OF fastener_set_usage;
  has_specific_fastener     : specific_fastener;
  has_fastener_quantity     : fastener_quantity;
UNIQUE
  has_specific_fastener,
    has_fastener_quantity;
END_ENTITY;

ENTITY fender_occ
  SUBTYPE OF (acc_ldr_maj_pt_occ);
END_ENTITY;

ENTITY flat_bar_occur
  SUBTYPE OF (fab_o_f_part_occ);
END_ENTITY;

ENTITY floor_plate_occ
  SUBTYPE OF (access_dev_occurr);
  is_occur_of_spec_floor_plate : OPTIONAL spec_floor_plate;
END_ENTITY;

ENTITY funct_id;
  has_codebase_funct_id_code : funct_id_code;
```

```
  has_value_label          : label;
  of_eng_part_occ_des      : OPTIONAL SET [1:?] OF eng_part_occ_des;
  funct_id_of_eng_system_occurr : OPTIONAL eng_system_occurr;
UNIQUE
  has_value_label,
    has_codebase_funct_id_code;
END_ENTITY;

ENTITY gen_interface_spiv
  SUBTYPE OF (generic_spiv);
END_ENTITY;

ENTITY generic_end_spiv
  SUBTYPE OF (generic_spiv);
END_ENTITY;

ENTITY generic_prod_spiv
  SUBTYPE OF (generic_spiv);
END_ENTITY;

ENTITY generic_space_spiv
  SUBTYPE OF (generic_spiv);
END_ENTITY;

ENTITY generic_spi
  SUBTYPE OF (spi);
END_ENTITY;

ENTITY generic_spiv
  SUPERTYPE OF (ONEOF(gen_interface_spiv,
              generic_end_spiv,
              generic_prod_spiv,
              generic_space_spiv))
  SUBTYPE OF (spiv);
END_ENTITY;

ENTITY grating_occurrence
  SUBTYPE OF (access_dev_occurr);
  is_occur_of_specific_grating : OPTIONAL specific_grating;
END_ENTITY;

ENTITY handrail_sys_occur
  SUBTYPE OF (o_f_system_occurr);
  has_rail_design_type      : rail_design_type;
  connects_via_stan_conn_sys_occ : OPTIONAL SET [1:?] OF stan_conn_sys_occ;
  has_rail_occurrence       : OPTIONAL SET [1:?] OF rail_occurrence;
  is_connected_with_handrail_sys_occur : OPTIONAL SET [1:?] OF handrail_sys_occur;
  is_connected_to_handrail_sys_occur : OPTIONAL SET [1:?] OF handrail_sys_occur;
  is_connected_to_eng_part_occur : OPTIONAL SET [1:?] OF eng_part_occur;
  is_connected_to_structural_part : OPTIONAL SET [1:?] OF structural_part;
```

```
  is_connected_to_eng_part_occur_ext : OPTIONAL SET [1:?] OF eng_part_occur_ext;
END_ENTITY;

ENTITY hinge_occur
  SUBTYPE OF (fab_o_f_part_occ);
END_ENTITY;

ENTITY hoist_occ
  SUBTYPE OF (acc_ldr_maj_pt_occ);
END_ENTITY;

ENTITY hull;
  may_used_specific_spiv    : OPTIONAL SET [1:?] OF specific_spiv;
  has_hull_id_n_identifier  : n_identifier;
  has_applicable_phys_occurr_spiv : OPTIONAL SET [1:?] OF phys_occurr_spiv;
  has_applicable_occurrence_spiv : OPTIONAL SET [1:?] OF occurrence_spiv;
UNIQUE
  has_hull_id_n_identifier;
END_ENTITY;

ENTITY hull_ftg_occurr
  SUBTYPE OF (o_f_part_occurr);
(*  is_connected_to_acc_ldr_part_occ : OPTIONAL SET [1:?] OF acc_ldr_part_occ;*)
END_ENTITY;

ENTITY identifier
  SUPERTYPE OF (n_identifier);
  with_identifier_id        : identifier_id;
UNIQUE
  with_identifier_id;
END_ENTITY;

ENTITY incl_ladder_occurr
  SUBTYPE OF (o_f_part_occurr);
  has_incl_ldr_trd_space    : OPTIONAL SET [1:?] OF incl_ldr_trd_space;
  has_incl_ldr_ang_dk       : incl_ldr_ang_dk;
  has_incl_ldr_handrl_ty    : incl_ldr_handrl_ty;
  has_incl_ldr_tread_occ    : OPTIONAL SET [1:?] OF incl_ldr_tread_occ;
  has_attached_incl_ldr_shield_oc : OPTIONAL incl_ldr_shield_oc;
  has_incl_ldr_lug_occur    : OPTIONAL SET [1:?] OF incl_ldr_lug_occur;
  is_occurr_of_spec_incl_ladder : spec_incl_ladder;
UNIQUE
  has_attached_incl_ldr_shield_oc;
END_ENTITY;

ENTITY incl_ldr_lug_occur
  SUBTYPE OF (o_f_fab_part);
  has_incl_ldr_lug_type     : incl_ldr_lug_type;
  connected_by_attachment_occurr : OPTIONAL SET [1:?] OF attachment_occurr;
  is_connected_to_structural_part : OPTIONAL SET [1:?] OF structural_part;
```

```
  of_incl_ladder_occurr     : OPTIONAL incl_ladder_occurr;
WHERE
  has_all_or_none_of (connected_by_attachment_occurr,
                      is_connected_to_structural_part);
END_ENTITY;

ENTITY incl_ldr_shield_oc
  SUBTYPE OF (o_f_fab_part);
  is_attached_to_incl_ladder_occurr : incl_ladder_occurr;
UNIQUE
  is_attached_to_incl_ladder_occurr;
END_ENTITY;

ENTITY incl_ldr_tread_occ
  SUBTYPE OF (o_f_fab_part);
  has_i_trd_width_val       : i_trd_width_val;
  has_incl_ldr_trd_loc      : incl_ldr_trd_loc;
  of_incl_ladder_occurr     : OPTIONAL SET [1:?] OF incl_ladder_occurr;
END_ENTITY;

ENTITY ind_att_end
  SUBTYPE OF (attach_end_occurr);
  is_independ_end_in_attachment_occurr : attachment_occurr;
  attached_attd_penet_obj   : attd_penet_obj;
UNIQUE
  is_independ_end_in_attachment_occurr,
    attached_attd_penet_obj;
END_ENTITY;

ENTITY ins_env_occurr
  SUBTYPE OF (part_env_occ);
END_ENTITY;

ENTITY ins_sheath_occ
  SUBTYPE OF (insul_cov_occurr);
  has_ins_sheath_perf       : OPTIONAL ins_sheath_perf;
END_ENTITY;

ENTITY ins_sheath_perf;
  with_ins_sheath_perf_id   : ins_sheath_perf_id;
  has_sh_perf_size_value    : OPTIONAL sh_perf_size_value;
  has_sh_perf_den_value     : OPTIONAL sh_perf_den_value;
  of_ins_sheath_occ         : OPTIONAL SET [1:?] OF ins_sheath_occ;
UNIQUE
  with_ins_sheath_perf_id;
END_ENTITY;

ENTITY ins_sheet_occ
  SUBTYPE OF (insul_cov_occurr);
END_ENTITY;
```

```
ENTITY insul_cov_occurr
  SUPERTYPE OF (ins_sheet_occ ANDOR
              ins_sheath_occ)
  SUBTYPE OF (o_f_fab_part);
  of_insul_part_occurr      : OPTIONAL insul_part_occurr;
END_ENTITY;

ENTITY insul_part_occurr
  SUPERTYPE OF (int_insul_env ANDOR
              ext_insul_env)
  SUBTYPE OF (attach_part_occurr);
  attaches_via_attach_end_occurr : OPTIONAL SET [1:?] OF attach_end_occurr;
  has_env_shape_part_env_occ_sh_rp : part_env_occ_sh_rp;
  has_insul_cov_occurr      : OPTIONAL SET [1:?] OF insul_cov_occurr;
  is_occur_of_spec_insul_part : spec_insul_part;
END_ENTITY;

ENTITY int_insul_env
  SUBTYPE OF (insul_part_occurr);
  red_x_sect_of_attd_penet_obj : OPTIONAL SET [1:?] OF attd_penet_obj;
END_ENTITY;

ENTITY interf_spiv_occurr
  SUPERTYPE OF (compartment_interf ANDOR
             (ONEOF(attachment_occurr,
               o_f_intercon_occ,
               o_f_interf_occurr)))
  SUBTYPE OF (occurrence_spiv);
  requires_fastener_set_occur : OPTIONAL fastener_set_occur;
UNIQUE
  requires_fastener_set_occur;
END_ENTITY;

ENTITY internal_spiv
  SUBTYPE OF (spiv);
END_ENTITY;

ENTITY ladder_rung_occur
  SUBTYPE OF (o_f_part_occurr);
END_ENTITY;

ENTITY lifeline_part_occ
  SUBTYPE OF (o_f_part_occurr);
END_ENTITY;

ENTITY lizard_assy_occ
  SUBTYPE OF (acc_ldr_maj_pt_occ);
END_ENTITY;
```

```
ENTITY medium_flow;
  has_flow_rate_value       : OPTIONAL flow_rate_value;
  has_cond_descr_medium_flow_cond : OPTIONAL medium_flow_cond;
  has_medium_flow_id        : medium_flow_id;
  has_medium_name           : medium_name;
  of_eq_sy_oper_cond        : OPTIONAL eq_sy_oper_cond;
  of_spec_equipment         : OPTIONAL spec_equipment;
UNIQUE
  has_medium_flow_id;
END_ENTITY;

ENTITY modular_sections;
  irb_mdlr_sections_id      : mdlr_sections_id;
  identified_by_modular_qty : modular_qty;
  of_spec_furnishing        : OPTIONAL SET [1:?] OF spec_furnishing;
UNIQUE
  irb_mdlr_sections_id;
END_ENTITY;

ENTITY n_approval_status
  SUBTYPE OF (approval_status);
  reps_approval_event       : OPTIONAL SET [1:?] OF approval_event;
END_ENTITY;

ENTITY n_date_and_time
  SUBTYPE OF (date_and_time);
  of_weight_condition       : OPTIONAL SET [1:?] OF weight_condition;
  reps_approval_event       : OPTIONAL SET [1:?] OF approval_event;
  of_reservation_event      : OPTIONAL SET [1:?] OF reservation_event;
  of_change_stat_event      : OPTIONAL SET [1:?] OF change_stat_event;
  of_cre_mod_del_event      : OPTIONAL SET [1:?] OF cre_mod_del_event;
  of_trans_event            : OPTIONAL SET [1:?] OF trans_event;
  of_promotion_event        : OPTIONAL SET [1:?] OF promotion_event;
END_ENTITY;

ENTITY n_ex_def_item
  SUBTYPE OF (ext_def_item);
  has_ref_type_ex_def_it_sh_r_t : ex_def_it_sh_r_t;
  has_sh_def_type_ex_def_it_sh_d_t : ex_def_it_sh_d_t;
  defines_external_spiv     : OPTIONAL external_spiv;
UNIQUE
  defines_external_spiv;
END_ENTITY;

ENTITY n_identifier
  SUBTYPE OF (identifier);
  reps_hull                 : OPTIONAL hull;
  reps_change               : OPTIONAL change;
  of_org_change_id          : OPTIONAL SET [1:?] OF org_change_id;
  reps_change_alternative   : OPTIONAL change_alternative;
```

```
UNIQUE
  reps_hull;
  reps_change;
  reps_change_alternative;
END_ENTITY;

ENTITY n_organization
  SUBTYPE OF (organization);
  authorizes_change        : OPTIONAL change;
  of_org_change_id         : OPTIONAL SET [1:?] OF org_change_id;
END_ENTITY;

ENTITY n_person_and_org
  SUBTYPE OF (person_and_org);
  of_weight_condition       : OPTIONAL SET [1:?] OF weight_condition;
  owner_of_config_spiv      : OPTIONAL SET [1:?] OF config_spiv;
  authorized_by_change      : OPTIONAL SET [1:?] OF change;
  performed_cre_mod_del_event : OPTIONAL SET [1:?] OF cre_mod_del_event;
  receiver_trans_event      : OPTIONAL SET [1:?] OF trans_event;
  checked_cre_mod_del_event : OPTIONAL SET [1:?] OF cre_mod_del_event;
END_ENTITY;

ENTITY n_s_bhd_att_pt_occ
  SUPERTYPE OF (post_occ ANDOR
              deflect_cover_occ)
  SUBTYPE OF (attach_part_occurr);
  of_n_s_bhd_attach_sys     : OPTIONAL n_s_bhd_attach_sys;
END_ENTITY;

ENTITY n_s_bhd_attach_sys;
  irb_n_s_bhd_att_sys_id    : n_s_bhd_att_sys_id;
  has_o_f_fab_part          : OPTIONAL SET [1:?] OF o_f_fab_part;
  has_n_s_bhd_att_pt_occ    : OPTIONAL SET [1:?] OF n_s_bhd_att_pt_occ;
  connects_n_s_bhd_sys_occur : OPTIONAL SET [1:?] OF n_s_bhd_sys_occur;
UNIQUE
  irb_n_s_bhd_att_sys_id;
END_ENTITY;

ENTITY n_s_bhd_panel_occ
  SUBTYPE OF (o_f_part_occurr);
  has_n_s_panel_type        : OPTIONAL SET [1:?] OF n_s_panel_type;
  is_occurr_of_spec_n_s_panel : spec_n_s_panel;
  of_n_s_bhd_sys_occur      : n_s_bhd_sys_occur;
END_ENTITY;

ENTITY n_s_bhd_sys_occur
  SUBTYPE OF (o_f_system_occurr);
  connects_via_n_s_bhd_attach_sys : OPTIONAL SET [1:?] OF n_s_bhd_attach_sys;
  has_n_s_bhd_panel_occ     : OPTIONAL SET [1:?] OF n_s_bhd_panel_occ;
  connected_to_n_s_bhd_sys_occur : OPTIONAL SET [1:?] OF n_s_bhd_sys_occur;
```

```
  is_conn_to_n_s_bhd_sys_occur : OPTIONAL SET [1:?] OF n_s_bhd_sys_occur;
  is_conn_to_eng_part_occur : OPTIONAL SET [1:?] OF eng_part_occur;
  is_conn_to_eng_part_external : OPTIONAL SET [1:?] OF eng_part_external;
END_ENTITY;

ENTITY o_f_assembly_occur
  SUBTYPE OF (assembly_occurr);
  has_assy_shop_dwg_no      : OPTIONAL assy_shop_dwg_no;
  has_assembly_name         : OPTIONAL assembly_name;
  of_o_f_assy_type          : o_f_assy_type;
  has_eng_part_occur        : OPTIONAL SET [1:?] OF eng_part_occur;
  has_assembly_end          : OPTIONAL SET [1:?] OF assembly_end;
  has_o_f_fab_part          : OPTIONAL SET [1:?] OF o_f_fab_part;
  has_assy_insul_instr      : OPTIONAL SET [1:?] OF assy_insul_instr;
  has_assy_coat_instruct    : OPTIONAL SET [1:?] OF assy_coat_instruct;
  has_assy_install_instr    : OPTIONAL SET [1:?] OF assy_install_instr;
  has_assy_assy_instruct    : OPTIONAL SET [1:?] OF assy_assy_instruct;
END_ENTITY;

ENTITY o_f_end_occur
  SUBTYPE OF (end_spiv_occurr);
  connects_eng_part_occur   : OPTIONAL eng_part_occur;
  of_assembly_end           : OPTIONAL SET [1:?] OF assembly_end;
  of_o_f_system_occurr      : OPTIONAL o_f_system_occurr;
  is_occur_of_spec_o_f_end  : spec_o_f_end;
  has_shape_of_of_end_occur_sh_rp : SET [1:?] OF of_end_occur_sh_rp;
  is_joined_by_o_f_interf_occurr : OPTIONAL o_f_interf_occurr;
  connects__o_f_intercon_occ : OPTIONAL o_f_intercon_occ;
  gets_loc_from_path_node   : path_node;
END_ENTITY;

ENTITY o_f_fab_part
  SUPERTYPE OF  (vert_ldr_rung_occ ANDOR
              vert_ldr_clip_occ ANDOR
              stan_cobb_sys_occ ANDOR
              port_ldr_st_att_oc ANDOR
              port_ldr_i_u_at_oc ANDOR
              insul_cov_occurr ANDOR
              incl_ldr_tread_occ ANDOR
              incl_ldr_shield_oc ANDOR
              incl_ldr_lug_occur ANDOR
              cl_saf_rl_bkt_occ ANDOR
              acc_ldr_att_pt_occ ANDOR
              (ONEOF(ofp_expl_geom_pt,
              ofp_std_sh_mac_pt)))
  SUBTYPE OF (o_f_part_occurr);
  irb_o_f_fab_part_id       : o_f_fab_part_id;
  of_door_att_sys           : OPTIONAL door_att_sys;
  of_false_deck_att_sys     : OPTIONAL false_deck_att_sys;
  of_ceiling_attach_sys     : OPTIONAL ceiling_attach_sys;
```

```
  of_n_s_bhd_attach_sys     : OPTIONAL n_s_bhd_attach_sys;
(*  of_o_f_assembly_occur     : o_f_assembly_occur;*)
UNIQUE
  irb_o_f_fab_part_id;
END_ENTITY;

ENTITY o_f_fab_piece;
  irb_o_f_fab_piece_id      : o_f_fab_piece_id;
  has_ofp_cut_geom          : OPTIONAL ofp_cut_geom;
  has_ofp_hole_lo_geom      : OPTIONAL ofp_hole_lo_geom;
  has_ofp_bend_bk_li_l_g    : OPTIONAL ofp_bend_bk_li_l_g;
  of_ofp_expl_geom_pt       : OPTIONAL ofp_expl_geom_pt;
UNIQUE
  irb_o_f_fab_piece_id;
END_ENTITY;

ENTITY o_f_intercon_occ
  SUBTYPE OF (interf_spiv_occurr);
  has_o_f_part_occurr       : OPTIONAL SET [1:?] OF o_f_part_occurr;
  of_o_f_system_occurr      : OPTIONAL o_f_system_occurr;
  of_o_f_intercon_occ       : OPTIONAL o_f_intercon_occ;
  has_o_f_intercon_occ      : OPTIONAL SET [1:?] OF o_f_intercon_occ;
  implements_attd_penet_obj : OPTIONAL SET [1:?] OF attd_penet_obj;
  connects_at_o_f_end_occur : SET [1:?] OF o_f_end_occur;
  gets_cl_geom_from_path_arc : SET [1:?] OF path_arc;
END_ENTITY;

ENTITY o_f_interf_occurr
  SUPERTYPE OF (of_interc_interf_o ANDOR
              o_f_sys_interf_occ ANDOR
              o_f_joint_occurr)
  SUBTYPE OF (interf_spiv_occurr);
  joins_o_f_end_occur       : SET [1:?] OF o_f_end_occur;
END_ENTITY;

ENTITY o_f_joint_occurr
  SUPERTYPE OF (of_jnt_occur_impl ANDOR
              of_jnt_occur_des)
  SUBTYPE OF (o_f_interf_occurr);
END_ENTITY;

ENTITY o_f_part_occurr
  SUPERTYPE OF (vert_ladder_occur ANDOR
              strips_occur ANDOR
              rail_occurrence ANDOR
              prot_coat_occurr ANDOR
              o_f_fab_part ANDOR
              n_s_bhd_panel_occ ANDOR
              ladder_rung_occur ANDOR
              incl_ladder_occurr ANDOR
```

```
            f_d_panel_occ ANDOR
            deck_cov_occurr ANDOR
            dec_chips_occ ANDOR
            ceiling_panel_occ ANDOR
            acc_ldr_maj_pt_occ ANDOR
            (ONEOF(bot_shl_dr_plug_oc,
            climb_saf_rail_occ,
            hull_ftg_occurr,
            lifeline_part_occ,
            port_ldr_occurr,
            safety_net_occurr,
            stow_part_occurr)))
  SUBTYPE OF (eng_part_occur);
  of_o_f_intercon_occ       : OPTIONAL o_f_intercon_occ;
  of_o_f_system_occurr      : OPTIONAL o_f_system_occurr;
  gets_cl_geom_from_path_arc : SET [1:?] OF path_arc;
END_ENTITY;

ENTITY o_f_sys_interf_occ
  SUBTYPE OF (o_f_interf_occurr);
END_ENTITY;

ENTITY o_f_system_occurr
  SUPERTYPE OF (stan_conn_sys_occ ANDOR
            of_sys_occ_design ANDOR
            deck_cov_sys_occur ANDOR
            (ONEOF (accomm_lad_sys_occ,
            ceiling_sys_occ,
            false_deck_sys_occ,
            handrail_sys_occur,
            n_s_bhd_sys_occur,
            prot_coat_sys_occu)))
  SUBTYPE OF (eng_system_occurr);
  has_o_f_intercon_occ      : OPTIONAL SET [1:?] OF o_f_intercon_occ;
  has_discr_part_occurr     : SET [1:?] OF discr_part_occurr;
  has_o_f_part_occurr       : SET [1:?] OF o_f_part_occurr;
  has_device_occurr         : SET [1:?] OF device_occurr;
  of_o_f_system_occurr      : OPTIONAL o_f_system_occurr;
  has_o_f_system_occurr     : OPTIONAL SET [1:?] OF o_f_system_occurr;
  has_o_f_end_occur         : SET [1:?] OF o_f_end_occur;
END_ENTITY;

ENTITY o_f_test;
  has_test_type             : OPTIONAL test_type;
  has_test_memo_number      : test_memo_number;
  has_test_memo_title       : test_memo_title;
  has_test_memo_rev         : test_memo_rev;
  has_o_f_test_element      : OPTIONAL SET [1:?] OF o_f_test_element;
UNIQUE
  has_test_memo_rev,
```

```
   has_test_memo_title,
   has_test_memo_number;
END_ENTITY;

ENTITY o_f_test_element
  SUPERTYPE OF (strength_tight_t_e ANDOR
              stat_load_drop_t_e ANDOR
              sound_fit_func_t_e ANDOR
              operational_t_e ANDOR
              elect_ins_res_t_e ANDOR
              compart_tight_t_e);
  irb_o_f_test_elem_id      : o_f_test_elem_id;
  of_o_f_test               : OPTIONAL o_f_test;
UNIQUE
  irb_o_f_test_elem_id;
END_ENTITY;

ENTITY occurrence_spi
  SUBTYPE OF (spi);
END_ENTITY;

ENTITY occurrence_spiv
  SUPERTYPE OF (ONEOF(
                      end_spiv_occurr,
              interf_spiv_occurr,
              product_spiv_occur,
              space_spiv_occurr))
   SUBTYPE OF (spiv);
  occurrence_of_specific_spiv : OPTIONAL specific_spiv;
  phy_manifested_by_phys_occurr_spiv : OPTIONAL SET [1:?] OF phys_occurr_spiv;
  is_applicable_to_hull     : OPTIONAL SET [1:?] OF hull;
END_ENTITY;

ENTITY of_end_occur_sh_rp;
  irb_of_end_occ_sh_r_id    : of_end_occ_sh_r_id;
  has_sh_rep_style_c        : sh_rep_style_c;
  has_o_f_end_loc_type      : o_f_end_loc_type;
  is_shape_of_o_f_end_occur : o_f_end_occur;
UNIQUE
  irb_of_end_occ_sh_r_id;
END_ENTITY;

ENTITY of_interc_interf_o
  SUBTYPE OF (o_f_interf_occurr);
END_ENTITY;

ENTITY of_jnt_occur_des
  SUBTYPE OF (o_f_joint_occurr);
  has_of_joining_type       : of_joining_type;
  has_jnt_insp_reqt_id      : OPTIONAL jnt_insp_reqt_id;
```

```
  has_jnt_test_reqt_id      : OPTIONAL jnt_test_reqt_id;
  has_jnt_joining_sp_id     : OPTIONAL jnt_joining_sp_id;
END_ENTITY;

ENTITY of_jnt_occur_impl
  SUBTYPE OF (o_f_joint_occurr);
  has_eng_distance_value    : OPTIONAL eng_distance_value;
  has_jnt_fab_reqt_id       : OPTIONAL jnt_fab_reqt_id;
  has_of_joint_join_type    : OPTIONAL of_joint_join_type;
  has_of_joint_tightness    : OPTIONAL of_joint_tightness;
  has_of_joint_seal_type    : OPTIONAL of_joint_seal_type;
END_ENTITY;

ENTITY of_joint_join_type;
  is_rep_by_joining_type_name : joining_type_name;
  determines_of_joint_tightness : OPTIONAL SET [1:?] OF of_joint_tightness;
  of_of_jnt_occur_impl      : OPTIONAL SET [1:?] OF of_jnt_occur_impl;
UNIQUE
  is_rep_by_joining_type_name;
END_ENTITY;

ENTITY of_joint_seal_type;
  is_rep_by_sealant_type_name : sealant_type_name;
  determines_of_joint_tightness : OPTIONAL SET [1:?] OF of_joint_tightness;
  of_of_jnt_occur_impl      : OPTIONAL SET [1:?] OF of_jnt_occur_impl;
UNIQUE
  is_rep_by_sealant_type_name;
END_ENTITY;

ENTITY of_joint_tightness;
  has_joint_tight_name      : joint_tight_name;
  is_determined_by_of_joint_join_type : of_joint_join_type;
  is_determined_by_of_joint_seal_type : of_joint_seal_type;
  of_of_jnt_occur_impl      : OPTIONAL SET [1:?] OF of_jnt_occur_impl;
UNIQUE
  has_joint_tight_name;
  is_determined_by_of_joint_join_type,
    is_determined_by_of_joint_seal_type;
END_ENTITY;

ENTITY of_sys_occ_design
  SUBTYPE OF (o_f_system_occurr);
  has_of_org_dwg_no         : OPTIONAL of_org_dwg_no;
  has_of_dwg_no_org_id      : OPTIONAL of_dwg_no_org_id;
  has_system_oper_cond      : OPTIONAL SET [1:?] OF system_oper_cond;
UNIQUE
  has_of_org_dwg_no;
  has_of_dwg_no_org_id;
END_ENTITY;
```

```
ENTITY ofp_bend_bk_li_l_g;
  of_o_f_fab_piece          : OPTIONAL SET [1:?] OF o_f_fab_piece;
END_ENTITY;

ENTITY ofp_cut_geom;
  of_o_f_fab_piece          : OPTIONAL SET [1:?] OF o_f_fab_piece;
END_ENTITY;

ENTITY ofp_expl_geom_pt
  SUBTYPE OF (o_f_fab_part);
  has_o_f_fab_piece         : SET [1:?] OF o_f_fab_piece;
END_ENTITY;

ENTITY ofp_hole_lo_geom;
  of_o_f_fab_piece          : OPTIONAL SET [1:?] OF o_f_fab_piece;
END_ENTITY;

ENTITY ofp_std_sh_mac_par;
  has_ofp_std_sh_mac_p_v    : ofp_std_sh_mac_p_v;
  has_ofp_st_sh_mac_p_n     : ofp_st_sh_mac_p_n;
  of_ofp_std_sh_mac_pt      : OPTIONAL ofp_std_sh_mac_pt;
UNIQUE
  has_ofp_st_sh_mac_p_n,
    has_ofp_std_sh_mac_p_v;
END_ENTITY;

ENTITY ofp_std_sh_mac_pt
  SUBTYPE OF (o_f_fab_part);
  has_ofp_std_sh_mac_id     : ofp_std_sh_mac_id;
  has_ofp_std_sh_mac_par    : OPTIONAL SET [1:?] OF ofp_std_sh_mac_par;
END_ENTITY;

ENTITY operational_t_e
  SUBTYPE OF (o_f_test_element);
  has_eng_part_occur        : SET [1:?] OF eng_part_occur;
END_ENTITY;

ENTITY org_change_id;
  of_change                 : OPTIONAL change;
  has_change_id_n_identifier : n_identifier;
  has_chg_org_n_organization : n_organization;
UNIQUE
  has_chg_org_n_organization,
    has_change_id_n_identifier;
END_ENTITY;

ENTITY organization
  SUPERTYPE OF (n_organization);
  with_organization_id      : organization_id;
UNIQUE
```

```
  with_organization_id;
END_ENTITY;

ENTITY part_env_occ
  SUPERTYPE OF (ins_env_occurr);
END_ENTITY;

ENTITY part_env_occ_sh_rp;
  irb_sh_rep_style_b        : sh_rep_style_b;
  irb_part_env_type_b       : part_env_type_b;
  irb_part_env_id_b         : part_env_id_b;
  is_env_of_eng_part_occur  : SET [1:?] OF eng_part_occur;
  geom_is_der_from_attd_penet_obj : OPTIONAL attd_penet_obj;
  geo_is_der_from_tot_pt_insul_thk : OPTIONAL tot_pt_insul_thk;
  env_shape_of_insul_part_occurr : SET [1:?] OF insul_part_occurr;
  geom_is_der_from_sp_part_env_sh_rep : OPTIONAL sp_part_env_sh_rep;
UNIQUE
  irb_part_env_id_b;
  geom_is_der_from_attd_penet_obj;
WHERE
  has_at_least_one_of (geom_is_der_from_attd_penet_obj,
                       geom_is_der_from_sp_part_env_sh_rep);
  has_at_most_one_of (geom_is_der_from_attd_penet_obj,
                      geom_is_der_from_sp_part_env_sh_rep);
END_ENTITY;

ENTITY path_arc;
  is_represented_by_path_arc_id : path_arc_id;
  is_represented_by_path_arc_type : path_arc_type;
  ends_at_path_node         : path_node;
  begins_at_path_node       : path_node;
  has_shape_of_path_arc_sh_rep : SET [1:?] OF path_arc_sh_rep;
  gives_cl_geom_to_o_f_part_occurr : OPTIONAL o_f_part_occurr;
  gives_cl_geom_to_o_f_intercon_occ : o_f_intercon_occ;
  is_occur_of_spec_path_arc : OPTIONAL spec_path_arc;
UNIQUE
  is_represented_by_path_arc_id;
WHERE
  has_at_most_one_of (gives_cl_geom_to_o_f_intercon_occ,
                      gives_cl_geom_to_o_f_part_occurr);
END_ENTITY;

ENTITY path_arc_sh_rep;
  is_represented_by_path_arc_sh_rep_id : path_arc_sh_rep_id;
  has_sh_rep_style          : sh_rep_style;
  is_shape_of_path_arc      : path_arc;
UNIQUE
  is_represented_by_path_arc_sh_rep_id;
END_ENTITY;
```

```
ENTITY path_node;
  is_represented_by_path_node_id : path_node_id;
  locates_path_split        : OPTIONAL path_split;
  occurs_at_path_split      : OPTIONAL path_split;
  gets_loc_from_path_node_sh_rep : path_node_sh_rep;
  gives_loc_to_o_f_end_occur : OPTIONAL SET [1:?] OF o_f_end_occur;
  ends_path_arc             : OPTIONAL SET [1:?] OF path_arc;
  begins_path_arc           : OPTIONAL SET [1:?] OF path_arc;
  gets_loc_from_spec_path_node : OPTIONAL spec_path_node;
UNIQUE
  is_represented_by_path_node_id;
  locates_path_split;
  gets_loc_from_path_node_sh_rep;
WHERE
  has_at_most_one_of (gets_loc_from_spec_path_node,
                      gets_loc_from_path_node_sh_rep);
END_ENTITY;

ENTITY path_node_sh_rep;
  is_represented_by_path_nd_sh_rep_id : path_nd_sh_rep_id;
  has_shape_rep_style_1     : shape_rep_style_1;
  gives_loc_to_path_node    : path_node;
UNIQUE
  is_represented_by_path_nd_sh_rep_id;
  gives_loc_to_path_node;
END_ENTITY;

ENTITY path_split;
  is_represented_by_path_split_id : path_split_id;
  is_located_by_path_node   : path_node;
  groups_path_node          : SET [1:?] OF path_node;
UNIQUE
  is_represented_by_path_split_id;
  is_located_by_path_node;
END_ENTITY;

ENTITY person_and_org
  SUPERTYPE OF (n_person_and_org);
  with_person_and_org_id    : person_and_org_id;
UNIQUE
  with_person_and_org_id;
END_ENTITY;

ENTITY phys_occurr_spiv
  SUBTYPE OF (spiv);
  used_at_physical_spiv     : OPTIONAL physical_spiv;
  phy_manifest_of_occurrence_spiv : occurrence_spiv;
  is_applicable_to_hull     : hull;
UNIQUE
  used_at_physical_spiv;
```

```
END_ENTITY;

ENTITY physical_occur_spi
  SUBTYPE OF (spi);
END_ENTITY;

ENTITY physical_spi
  SUBTYPE OF (spi);
END_ENTITY;

ENTITY physical_spiv
  SUBTYPE OF (spiv);
  phys_manifest_of_specific_spiv : specific_spiv;
  uses_phys_occurr_spiv     : OPTIONAL phys_occurr_spiv;
UNIQUE
  uses_phys_occurr_spiv;
END_ENTITY;

ENTITY pipe_occur
  SUBTYPE OF (fab_o_f_part_occ);
END_ENTITY;

ENTITY platform_occ
  SUBTYPE OF (acc_ldr_maj_pt_occ);
END_ENTITY;

ENTITY port_ldr_i_u_at_oc
  SUBTYPE OF (o_f_fab_part);
  of_port_ldr_occurr        : OPTIONAL SET [1:?] OF port_ldr_occurr;
END_ENTITY;

ENTITY port_ldr_occurr
  SUBTYPE OF (o_f_part_occurr);
  has_i_u_pt_ldr_loc_des    : OPTIONAL i_u_pt_ldr_loc_des;
  has_port_ldr_type         : port_ldr_type;
  has_port_ldr_condition    : port_ldr_condition;
  is_occur_of_specific_port_ldr : OPTIONAL specific_port_ldr;
  has_port_ldr_i_u_at_oc    : OPTIONAL port_ldr_i_u_at_oc;
  has_port_ldr_st_att_oc    : OPTIONAL port_ldr_st_att_oc;
END_ENTITY;

ENTITY port_ldr_st_att_oc
  SUBTYPE OF (o_f_fab_part);
  of_port_ldr_occurr        : OPTIONAL SET [1:?] OF port_ldr_occurr;
END_ENTITY;

ENTITY post_occ
  SUBTYPE OF (n_s_bhd_att_pt_occ);
  has_post_type             : post_type;
END_ENTITY;
```

```
ENTITY potential_spiv_chg;
  of_spiv                  : spiv;
  of_change_alternative     : change_alternative;
UNIQUE
  of_spiv,
    of_change_alternative;
END_ENTITY;

ENTITY power;
  has_power_value           : power_value;
  output_of_spec_equipment  : OPTIONAL spec_equipment;
  input_of_spec_equipment   : OPTIONAL spec_equipment;
  has_power_char            : power_char;
UNIQUE
  has_power_char,
    has_power_value;
END_ENTITY;

ENTITY power_char
  SUPERTYPE OF (ONEOF(ac_power_char,
                dc_power_char));
  has_power_type            : power_type;
  has_power_char_id         : power_char_id;
  of_power                  : OPTIONAL SET [1:?] OF power;
UNIQUE
  has_power_char_id;
END_ENTITY;

ENTITY product
  SUPERTYPE OF (spi);
  has_product_id            : product_id;
UNIQUE
  has_product_id;
END_ENTITY;

ENTITY product_spiv_occur
  SUPERTYPE OF (ONEOF(
                assembly_occurr,
                eng_part_occur,
                eng_system_occurr))
  SUBTYPE OF (occurrence_spiv);
END_ENTITY;

ENTITY product_version
  SUPERTYPE OF (spiv);
  has_prod_ver_id           : prod_ver_id;
UNIQUE
  has_prod_ver_id;
END_ENTITY;
```

```
ENTITY promotion_event;
  has_promotion_level       : promotion_level;
  event_occ_n_date_and_time : n_date_and_time;
  of_promotion_of_spiv      : OPTIONAL SET [1:?] OF promotion_of_spiv;
UNIQUE
  event_occ_n_date_and_time,
    has_promotion_level;
END_ENTITY;

ENTITY promotion_of_spiv;
  has_promotion_event       : promotion_event;
  of_spiv                   : spiv;
UNIQUE
  has_promotion_event,
    of_spiv;
END_ENTITY;

ENTITY prot_coat_occurr
  SUBTYPE OF (o_f_part_occurr);
  of_deck_cov_occurr        : OPTIONAL SET [1:?] OF deck_cov_occurr;
  of_prot_coat_sys_occu     : prot_coat_sys_occu;
END_ENTITY;

ENTITY prot_coat_sys_occu
  SUBTYPE OF (o_f_system_occurr);
  has_surface_prep          : surface_prep;
  has_prot_coat_area_v      : prot_coat_area_v;
  has_prot_coat_qty         : prot_coat_qty;
  coats_external_sp_eng_pt  : OPTIONAL external_sp_eng_pt;
  is_occurr_of_spec_prot_coat : OPTIONAL SET [1:?] OF spec_prot_coat;
  has_prot_coat_occurr      : OPTIONAL SET [1:?] OF prot_coat_occurr;
  coats_spec_eng_part       : spec_eng_part;
END_ENTITY;

ENTITY prot_coat_type;
  irb_prot_coat_type_id     : prot_coat_type_id;
  has_prot_coat_color       : OPTIONAL prot_coat_color;
  has_prot_coat_form_typ    : OPTIONAL prot_coat_form_typ;
  of_spec_prot_coat         : OPTIONAL SET [1:?] OF spec_prot_coat;
UNIQUE
  irb_prot_coat_type_id;
END_ENTITY;

ENTITY rail_occurrence
  SUBTYPE OF (o_f_part_occurr);
  is_occur_of_specific_rail : specific_rail;
  of_handrail_sys_occur     : handrail_sys_occur;
END_ENTITY;
```

```
ENTITY removal_rt_env_occ
  SUBTYPE OF (envelope_occurr);
  referred_to_by_eq_remov_rte_instr : OPTIONAL SET [1:?] OF eq_remov_rte_instr;
END_ENTITY;

ENTITY reservation_event;
  with_reservation_evt_id   : reservation_evt_id;
  has_reserv_flag           : OPTIONAL reserv_flag;
  has_reservation_desc      : OPTIONAL reservation_desc;
  has_n_date_and_time       : OPTIONAL n_date_and_time;
  of_spiv_relationship      : OPTIONAL SET [1:?] OF spiv_relationship;
UNIQUE
  with_reservation_evt_id;
END_ENTITY;

ENTITY ret_split_ring_occ
  SUBTYPE OF (fab_o_f_part_occ);
END_ENTITY;

ENTITY rope_occ
  SUBTYPE OF (acc_ldr_maj_pt_occ);
END_ENTITY;

ENTITY round_bar_occur
  SUBTYPE OF (fab_o_f_part_occ);
END_ENTITY;

ENTITY safety_net_occurr
  SUBTYPE OF (o_f_part_occurr);
END_ENTITY;

ENTITY shackle_occ
  SUBTYPE OF (acc_ldr_maj_pt_occ);
END_ENTITY;

ENTITY sheet_occur
  SUBTYPE OF (fab_o_f_part_occ);
END_ENTITY;

ENTITY socket_assy_occ
  SUBTYPE OF (acc_ldr_maj_pt_occ);
END_ENTITY;

ENTITY sound_fit_func_t_e
  SUBTYPE OF (o_f_test_element);
  has_eng_part_occur        : SET [1:?] OF eng_part_occur;
END_ENTITY;

ENTITY sp_acc_ldr_att_pt
  SUBTYPE OF (spec_attach_part);
```

```
  has_occur_of_acc_ldr_att_pt_occ : OPTIONAL SET [1:?] OF acc_ldr_att_pt_occ;
END_ENTITY;

ENTITY sp_acc_ldr_maj_pt
  SUBTYPE OF (spec_o_f_part);
END_ENTITY;

ENTITY sp_eng_part_open;
  irb_sp_eng_pt_open_id     : sp_eng_pt_open_id;
  has_spec_open_purpose     : spec_open_purpose;
UNIQUE
  irb_sp_eng_pt_open_id;
END_ENTITY;

ENTITY sp_eng_pt_sh_rep;
  has_shape_rep_style       : shape_rep_style;
  has_sp_eng_part_sha_id    : sp_eng_part_sha_id;
  has_shape_rep_type_2      : shape_rep_type_2;
  is_shape_of_spec_eng_part : spec_eng_part;
UNIQUE
  has_sp_eng_part_sha_id;
END_ENTITY;

ENTITY sp_open_shape_rep;
  irb_sp_open_sh_rep_id     : sp_open_sh_rep_id;
  of_spec_eng_part_open     : OPTIONAL SET [1:?] OF spec_eng_part_open;
UNIQUE
  irb_sp_open_sh_rep_id;
END_ENTITY;

ENTITY sp_part_env_sh_rep
  SUPERTYPE OF (spec_insulat_env);
  has_spec_part_env_id      : spec_part_env_id;
  has_shape_rep_type        : shape_rep_type;
  has_spec_part_env_type    : spec_part_env_type;
  is_shape_of_spec_eng_part : spec_eng_part;
  used_to_der_geom_part_env_occ_sh_rp : OPTIONAL SET [1:?] OF part_env_occ_sh_rp;
UNIQUE
  has_spec_part_env_id;
END_ENTITY;

ENTITY sp_path_arc_sh_rep;
  has_sp_pa_ar_sh_rep_id    : sp_pa_ar_sh_rep_id;
  has_sp_path_arc_sh_sty    : sp_path_arc_sh_sty;
  is_shape_of_spec_path_arc : spec_path_arc;
UNIQUE
  has_sp_pa_ar_sh_rep_id;
END_ENTITY;

ENTITY sp_path_node_sh_rp;
```

```
  is_rep_by_sp_pa_nd_sh_rep_st : sp_pa_nd_sh_rep_st;
  has_shape_rep_style_a     : shape_rep_style_a;
  gives_loc_to_spec_path_node : spec_path_node;
UNIQUE
  is_rep_by_sp_pa_nd_sh_rep_st;
END_ENTITY;

ENTITY space_end_occurr
  SUPERTYPE OF (compart_boundary)
  SUBTYPE OF (end_spiv_occurr);
END_ENTITY;

ENTITY space_spiv_occurr
  SUPERTYPE OF (ONEOF(
              compartment_occurr,
              envelope_occurr,
              zone_occurr))
  SUBTYPE OF (occurrence_spiv);
END_ENTITY;

ENTITY spec_acc_ldr_part;
  has_occur_of_acc_ldr_maj_pt_occ : OPTIONAL SET [1:?] OF acc_ldr_maj_pt_occ;
END_ENTITY;

ENTITY spec_access_dev
  SUPERTYPE OF (specific_grating ANDOR
              specific_door ANDOR
              spec_floor_plate)
  SUBTYPE OF (specific_device);
END_ENTITY;

ENTITY spec_attach_part
  SUPERTYPE OF (sp_acc_ldr_att_pt)
  SUBTYPE OF (spec_discrete_part);
END_ENTITY;

ENTITY spec_bot_shl_drn
  SUBTYPE OF (spec_o_f_part);
END_ENTITY;

ENTITY spec_ceiling_panel
  SUBTYPE OF (spec_o_f_part);
  has_occur_of_ceiling_panel_occ : OPTIONAL SET [1:?] OF ceiling_panel_occ;
END_ENTITY;

ENTITY spec_climb_saf_rl
  SUBTYPE OF (spec_o_f_part);
  has_occur_of_climb_saf_rail_occ : SET [1:?] OF climb_saf_rail_occ;
END_ENTITY;
```

```
ENTITY spec_deck_cover
  SUBTYPE OF (spec_o_f_part);
  has_deck_cover_color      : deck_cover_color;
  has_deck_cov_form_name    : deck_cov_form_name;
  has_deck_cov_grade_des    : deck_cov_grade_des;
  has_dk_cov_code_id        : dk_cov_code_id;
  has_occur_of_deck_cov_occurr : deck_cov_occurr;
UNIQUE
  has_dk_cov_code_id;
END_ENTITY;

ENTITY spec_deck_rigging
  SUBTYPE OF (spec_equipment);
END_ENTITY;

ENTITY spec_discrete_part
  SUPERTYPE OF (specific_fastener ANDOR
              spec_attach_part)
  SUBTYPE OF (spec_eng_part);
END_ENTITY;

ENTITY spec_end_spiv
  SUPERTYPE OF (spec_o_f_end)
  SUBTYPE OF (specific_spiv);
END_ENTITY;

ENTITY spec_eng_fab_part
  SUBTYPE OF (spec_eng_part);
END_ENTITY;

ENTITY spec_eng_part
  SUPERTYPE OF (specific_device ANDOR
              spec_o_f_part ANDOR
              spec_eng_part_impl ANDOR
              spec_eng_part_des ANDOR
              spec_eng_fab_part ANDOR
              spec_discrete_part)
  SUBTYPE OF (spec_product_spiv);
  cut_by_spec_eng_part_open : OPTIONAL SET [1:?] OF spec_eng_part_open;
  has_spec_path_arc         : OPTIONAL spec_path_arc;
  has_shape_of_sp_eng_pt_sh_rep : OPTIONAL SET [1:?] OF sp_eng_pt_sh_rep;
  has_shape_of_sp_part_env_sh_rep : OPTIONAL SET [1:?] OF sp_part_env_sh_rep;
  connects_at_spec_o_f_end  : OPTIONAL SET [1:?] OF spec_o_f_end;
  has_occur_of_eng_part_occur : SET [1:?] OF eng_part_occur;
  is_coated_by_prot_coat_sys_occu : OPTIONAL SET [1:?] OF prot_coat_sys_occu;
  occurs_at_attd_penet_obj  : OPTIONAL SET [1:?] OF attd_penet_obj;
UNIQUE
  has_spec_path_arc;
END_ENTITY;
```

```
ENTITY spec_eng_part_des
  SUBTYPE OF (spec_eng_part);
  has_e_p_matl_spec        : OPTIONAL e_p_matl_spec;
  has_e_p_material         : OPTIONAL e_p_material;
  has_e_p_specification    : OPTIONAL e_p_specification;
  has_e_p_description      : OPTIONAL e_p_description;
END_ENTITY;

ENTITY spec_eng_part_impl
  SUBTYPE OF (spec_eng_part);
  has_ep_density_value     : OPTIONAL ep_density_value;
  has_specif_standard      : OPTIONAL specif_standard;
  has_all_parts_list_no    : OPTIONAL all_parts_list_no;
  has_navsea_dwg_no        : OPTIONAL navsea_dwg_no;
  has_ep_manuf_part_no     : OPTIONAL ep_manuf_part_no;
  has_ep_manuf_name        : OPTIONAL ep_manuf_name;
  has_fed_stock_no         : OPTIONAL fed_stock_no;
  has_mil_std_number       : OPTIONAL mil_std_number;
  has_sepi_thick_value     : OPTIONAL sepi_thick_value;
  has_sepi_length_value    : OPTIONAL sepi_length_value;
  has_sepi_width_value     : OPTIONAL sepi_width_value;
  has_ep_identifier        : OPTIONAL ep_identifier;
  has_weight_condition     : OPTIONAL SET [1:?] OF weight_condition;
UNIQUE
  has_all_parts_list_no;
  has_fed_stock_no;
  has_mil_std_number;
END_ENTITY;

ENTITY spec_eng_part_open;
  has_sp_open_shape_rep    : sp_open_shape_rep;
  cutting_spec_eng_part    : spec_eng_part;
END_ENTITY;

ENTITY spec_equipment
  SUPERTYPE OF (spec_window_wiper ANDOR
                spec_furnishing ANDOR
                spec_deck_rigging)
  SUBTYPE OF (specific_device);
  has_equipment_source     : OPTIONAL equipment_source;
  has_eq_mnfr_dwg_no       : OPTIONAL eq_mnfr_dwg_no;
  has_equip_fdn_finish     : OPTIONAL equip_fdn_finish;
  has_ang_tol_value        : OPTIONAL ang_tol_value;
  has_flat_tol_lngth_val   : OPTIONAL flat_tol_lngth_val;
  has_eq_safety_descr      : OPTIONAL eq_safety_descr;
  has_eq_shock_qual_stat   : OPTIONAL eq_shock_qual_stat;
  has_rated_medium_flow    : OPTIONAL SET [1:?] OF medium_flow;
  has_output_of_power      : OPTIONAL SET [1:?] OF power;
  has_input_power_power    : OPTIONAL SET [1:?] OF power;
  has_eq_interchange       : SET [1:?] OF eq_interchange;
```

```
  has_occur_of_equip_occurr : OPTIONAL SET [1:?] OF equip_occurr;
END_ENTITY;

ENTITY spec_f_d_panel;
  has_occ_of_f_d_panel_occ  : OPTIONAL SET [1:?] OF f_d_panel_occ;
END_ENTITY;

ENTITY spec_f_d_panel_occ
  SUBTYPE OF (spec_o_f_part);
END_ENTITY;

ENTITY spec_fastener_set;
  is_rep_by_spec_fast_set_id : spec_fast_set_id;
  has_comp_of_fastener_set_usage : SET [1:?] OF fastener_set_usage;
  occur_at_fastener_set_occur : OPTIONAL SET [1:?] OF fastener_set_occur;
UNIQUE
  is_rep_by_spec_fast_set_id;
END_ENTITY;

ENTITY spec_floor_plate
  SUBTYPE OF (spec_access_dev);
  has_floor_plate_type      : OPTIONAL floor_plate_type;
  has_occur_of_floor_plate_occ : SET [1:?] OF floor_plate_occ;
END_ENTITY;

ENTITY spec_furnishing
  SUBTYPE OF (spec_equipment);
  has_lock_type             : OPTIONAL lock_type;
  has_surface_finish        : OPTIONAL surface_finish;
  has_modular_sections      : OPTIONAL modular_sections;
END_ENTITY;

ENTITY spec_hull_ftg
  SUBTYPE OF (spec_o_f_part);
END_ENTITY;

ENTITY spec_incl_ladder
  SUBTYPE OF (spec_o_f_part);
  has_occurr_of_incl_ladder_occurr : OPTIONAL SET [1:?] OF incl_ladder_occurr;
END_ENTITY;

ENTITY spec_insul_part
  SUBTYPE OF (attach_end_occurr);
  has_therm_coeff           : OPTIONAL therm_coeff;
  has_insul_type            : insul_type;
  occurs_at_insul_part_occurr : OPTIONAL SET [1:?] OF insul_part_occurr;
  has_tot_pt_insul_thk      : tot_pt_insul_thk;
UNIQUE
  has_tot_pt_insul_thk;
END_ENTITY;
```

```
ENTITY spec_insulat_env
  SUBTYPE OF (sp_part_env_sh_rep);
END_ENTITY;

ENTITY spec_interf_spiv
  SUBTYPE OF (specific_spiv);
END_ENTITY;

ENTITY spec_ladder_rung
  SUBTYPE OF (spec_o_f_part);
END_ENTITY;

ENTITY spec_lifeline_part
  SUBTYPE OF (spec_o_f_part);
END_ENTITY;

ENTITY spec_n_s_panel
  SUBTYPE OF (spec_o_f_part);
  has_occurr_of_n_s_bhd_panel_occ : OPTIONAL SET [1:?] OF n_s_bhd_panel_occ;
END_ENTITY;

ENTITY spec_o_f_end
  SUBTYPE OF (spec_end_spiv);
  has_spec_of_end_type      : spec_of_end_type;
  has_shape_of_spec_of_end_sh_rep : OPTIONAL SET [1:?] OF spec_of_end_sh_rep;
  of_spec_eng_part          : spec_eng_part;
  has_occurr_of_o_f_end_occur : OPTIONAL SET [1:?] OF o_f_end_occur;
  gets_rel_loc_from_spec_path_node : spec_path_node;
END_ENTITY;

ENTITY spec_o_f_fastener;
  has_of_fastener_type      : of_fastener_type;
  is_used_by_fastener_usage : SET [1:?] OF fastener_usage;
END_ENTITY;

ENTITY spec_o_f_part
  SUPERTYPE OF  (specific_rail ANDOR
              spec_prot_coat ANDOR
              spec_n_s_panel ANDOR
              spec_f_d_panel_occ ANDOR
              spec_deck_cover ANDOR
              spec_ceiling_panel ANDOR
              sp_acc_ldr_maj_pt ANDOR
              (ONEOF (spec_bot_shl_drn,
              spec_climb_saf_rl,
              spec_hull_ftg,
              spec_incl_ladder,
              spec_ladder_rung,
              spec_lifeline_part,
```

```
            spec_safe_net_part,
            spec_stow_part,
            spec_vert_ladder,
            specific_port_ldr)))
  SUBTYPE OF (spec_eng_part);
END_ENTITY;

ENTITY spec_of_end_sh_rep;
  irb_sp_of_end_sh_re_id    : sp_of_end_sh_re_id;
  has_shape_rep_style_2     : shape_rep_style_2;
  is_shape_of_spec_o_f_end  : spec_o_f_end;
UNIQUE
  irb_sp_of_end_sh_re_id;
END_ENTITY;

ENTITY spec_open_sh_rep;
  has_open_sh_rep_type      : open_sh_rep_type;
END_ENTITY;

ENTITY spec_path_arc;
  is_represented_by_spec_path_arc_id : spec_path_arc_id;
  has_spec_path_arc_type    : spec_path_arc_type;
  of_spec_eng_part          : spec_eng_part;
  has_shape_of_sp_path_arc_sh_rep : SET [1:?] OF sp_path_arc_sh_rep;
  has_occur_of_path_arc     : OPTIONAL SET [1:?] OF path_arc;
  ends_at_spec_path_node    : spec_path_node;
  begins_at_spec_path_node  : spec_path_node;
UNIQUE
  is_represented_by_spec_path_arc_id;
  of_spec_eng_part;
END_ENTITY;

ENTITY spec_path_node;
  has_spec_path_node_id     : spec_path_node_id;
  gets_loc_from_sp_path_node_sh_rp : SET [1:?] OF sp_path_node_sh_rp;
  gives_loc_to_path_node    : OPTIONAL SET [1:?] OF path_node;
  gives_rel_loc_to_spec_o_f_end : OPTIONAL SET [1:?] OF spec_o_f_end;
  ends_spec_path_arc        : OPTIONAL SET [1:?] OF spec_path_arc;
  begins_spec_path_arc      : OPTIONAL SET [1:?] OF spec_path_arc;
UNIQUE
  has_spec_path_node_id;
END_ENTITY;

ENTITY spec_product_spiv
  SUPERTYPE OF (spec_eng_part)
  SUBTYPE OF (specific_spiv);
END_ENTITY;

ENTITY spec_prot_coat
  SUBTYPE OF (spec_o_f_part);
```

```
  has_prot_coat_thk_val     : prot_coat_thk_val;
  has_prot_coat_type        : prot_coat_type;
  occurr_at_prot_coat_sys_occu : prot_coat_sys_occu;
END_ENTITY;

ENTITY spec_safe_net_part
  SUBTYPE OF (spec_o_f_part);
END_ENTITY;

ENTITY spec_space_spiv
  SUBTYPE OF (specific_spiv);
END_ENTITY;

ENTITY spec_stow_part
  SUBTYPE OF (spec_o_f_part);
END_ENTITY;

ENTITY spec_vert_ladder
  SUBTYPE OF (spec_o_f_part);
  has_occur_of_vert_ladder_occur : OPTIONAL SET [1:?] OF vert_ladder_occur;
END_ENTITY;

ENTITY spec_window
  SUBTYPE OF (specific_device);
END_ENTITY;

ENTITY spec_window_wiper
  SUBTYPE OF (spec_equipment);
END_ENTITY;

ENTITY specific_device
  SUPERTYPE OF (spec_access_dev ANDOR
                spec_equipment ANDOR
                spec_window)
  SUBTYPE OF (spec_eng_part);
END_ENTITY;

ENTITY specific_door
  SUBTYPE OF (spec_access_dev);
  has_occ_of_door_occurrence : OPTIONAL SET [1:?] OF door_occurrence;
END_ENTITY;

ENTITY specific_fastener
  SUBTYPE OF (spec_discrete_part);
  of_fastener_usage         : OPTIONAL SET [1:?] OF fastener_usage;
END_ENTITY;

ENTITY specific_grating
  SUBTYPE OF (spec_access_dev);
  has_dist_betw_bear_bar    : OPTIONAL dist_betw_bear_bar;
```

```
  has_dist_bet_cross_bar    : OPTIONAL dist_bet_cross_bar;
  has_grating_type          : OPTIONAL grating_type;
  has_occur_of_grating_occurrence : SET [1:?] OF grating_occurrence;
END_ENTITY;

ENTITY specific_port_ldr
  SUBTYPE OF (spec_o_f_part);
  has_occur_of_port_ldr_occurr : SET [1:?] OF port_ldr_occurr;
END_ENTITY;

ENTITY specific_rail
  SUBTYPE OF (spec_o_f_part);
  has_occur_of_rail_occurrence : OPTIONAL SET [1:?] OF rail_occurrence;
END_ENTITY;

ENTITY specific_spi
  SUBTYPE OF (spi);
END_ENTITY;

ENTITY specific_spiv
  SUPERTYPE OF (ONEOF(
              spec_end_spiv,
              spec_interf_spiv,
              spec_product_spiv,
              spec_space_spiv))
  SUBTYPE OF (spiv);
  phys_manifest_by_physical_spiv : OPTIONAL SET [1:?] OF physical_spiv;
  occurs_at_occurrence_spiv : OPTIONAL SET [1:?] OF occurrence_spiv;
  may_be_used_in_hull       : OPTIONAL SET [1:?] OF hull;
END_ENTITY;

ENTITY spi
  SUPERTYPE OF (user_def_coll_spi ANDOR
              specific_spi ANDOR
              physical_spi ANDOR
              physical_occur_spi ANDOR
              occurrence_spi ANDOR
              generic_spi ANDOR
              context_spi ANDOR
              component_spi)
  SUBTYPE OF (product);
  irb_spi_id                : spi_id;
  has_version_of_spiv       : OPTIONAL SET [1:?] OF spiv;
UNIQUE
  irb_spi_id;
END_ENTITY;

ENTITY spiv
  SUPERTYPE OF ((user_def_coll_spiv ANDOR
              context_spiv ANDOR
```

```
            component_spiv ANDOR
            (ONEOF(generic_spiv,
            occurrence_spiv,
            phys_occurr_spiv,
            physical_spiv,
            specific_spiv)))
            AND
           (ONEOF(external_spiv,
             internal_spiv)))
  SUBTYPE OF (product_version);
  has_ref_def_source        : ref_def_source;
  has_version               : version;
  potent_impacted_by_potential_spiv_chg : OPTIONAL SET [1:?] OF potential_spiv_chg;
  baseline_in_cre_mod_del_event : OPTIONAL SET [1:?] OF cre_mod_del_event;
  is_cre_mod_del_thr_cre_mod_del_event : OPTIONAL SET [1:?] OF cre_mod_del_event;
  has_promotion_of_spiv     : OPTIONAL SET [1:?] OF promotion_of_spiv;
  has_transfer_of_spiv      : OPTIONAL SET [1:?] OF transfer_of_spiv;
  is_version_for_spi        : spi;
UNIQUE
  is_version_for_spi,
    has_version;
END_ENTITY;

ENTITY spiv_relationship
  SUPERTYPE OF (approval_relat);
  has_spiv_relat_context    : spiv_relat_context;
  has_spiv_relat_type       : spiv_relat_type;
  has_reservation_event     : OPTIONAL reservation_event;
  has_context_of_context_spiv : context_spiv;
  has_component_of_component_spiv : component_spiv;
UNIQUE
  has_spiv_relat_type,
    has_component_of_component_spiv,
    has_context_of_context_spiv;
END_ENTITY;

ENTITY stan_cobb_sys_occ
  SUBTYPE OF (o_f_fab_part);
END_ENTITY;

ENTITY stan_conn_sys_occ
  SUBTYPE OF (o_f_system_occurr);
  connects_handrail_sys_occur : handrail_sys_occur;
END_ENTITY;

ENTITY stat_load_drop_t_e
  SUBTYPE OF (o_f_test_element);
  has_stat_l_d_hgt_value    : OPTIONAL stat_l_d_hgt_value;
  has_load_weight_value     : OPTIONAL load_weight_value;
  has_eng_part_occur        : SET [1:?] OF eng_part_occur;
```

```
END_ENTITY;

ENTITY stow_part_occurr
  SUBTYPE OF (o_f_part_occurr);
END_ENTITY;

ENTITY strength_tight_t_e
  SUBTYPE OF (o_f_test_element);
  has_eng_part_occur        : SET [1:?] OF eng_part_occur;
END_ENTITY;

ENTITY strips_occur
  SUBTYPE OF (o_f_part_occurr);
  of_deck_cov_sys_occur     : OPTIONAL SET [1:?] OF deck_cov_sys_occur;
END_ENTITY;

ENTITY structural_part;
  with_structural_part_id   : structural_part_id;
  is_conn_to_door_occurrence : OPTIONAL SET [1:?] OF door_occurrence;
  is_connected_to_handrail_sys_occur : OPTIONAL SET [1:?] OF handrail_sys_occur;
  conn_to_cl_saf_rl_bkt_occ : OPTIONAL cl_saf_rl_bkt_occ;
  is_connected_by_vert_ldr_clip_occ : OPTIONAL vert_ldr_clip_occ;
  is_connected_to_incl_ldr_lug_occur : OPTIONAL SET [1:?] OF incl_ldr_lug_occur;
  is_connected_to_false_deck_sys_occ : OPTIONAL SET [1:?] OF false_deck_sys_occ;
  is_connected_to_ceiling_sys_occ : OPTIONAL SET [1:?] OF ceiling_sys_occ;
  implements_attd_penet_obj : OPTIONAL SET [1:?] OF attd_penet_obj;
  implements_attach_penet_obj : OPTIONAL SET [1:?] OF attach_penet_obj;
UNIQUE
  with_structural_part_id;
  is_connected_by_vert_ldr_clip_occ;
END_ENTITY;

ENTITY surface_finish;
  irb_surface_finish_id     : surface_finish_id;
  has_color_id              : color_id;
  located_by_surf_fin_location : surf_fin_location;
  of_spec_furnishing        : OPTIONAL SET [1:?] OF spec_furnishing;
UNIQUE
  irb_surface_finish_id;
END_ENTITY;

ENTITY system_oper_cond;
  has_oper_cond_descript    : OPTIONAL oper_cond_descript;
  irb_sys_oper_cond_id      : sys_oper_cond_id;
  of_of_sys_occ_design      : OPTIONAL of_sys_occ_design;
  has_eq_sy_oper_cond       : OPTIONAL SET [1:?] OF eq_sy_oper_cond;
UNIQUE
  irb_sys_oper_cond_id;
END_ENTITY;
```

```
ENTITY tending_line_occ
  SUBTYPE OF (acc_ldr_maj_pt_occ);
END_ENTITY;

ENTITY tot_pt_insul_thk;
  with_tot_pt_insl_thk_id   : tot_pt_insl_thk_id;
  has_pt_insul_thk_value    : pt_insul_thk_value;
  used_to_der_geo_of_part_env_occ_sh_rp : OPTIONAL SET [1:?] OF part_env_occ_sh_rp;
  of_spec_insul_part        : OPTIONAL spec_insul_part;
UNIQUE
  with_tot_pt_insl_thk_id;
  of_spec_insul_part;
END_ENTITY;

ENTITY trans_event;
  sent_to_n_person_and_org  : n_person_and_org;
  has_n_date_and_time       : n_date_and_time;
  has_transfer_of_spiv      : OPTIONAL SET [1:?] OF transfer_of_spiv;
UNIQUE
  sent_to_n_person_and_org,
    has_n_date_and_time;
END_ENTITY;

ENTITY transfer_of_spiv;
  of_trans_event            : trans_event;
  of_spiv                   : spiv;
UNIQUE
  of_trans_event,
    of_spiv;
END_ENTITY;

ENTITY transp_dolly_occ
  SUBTYPE OF (acc_ldr_maj_pt_occ);
END_ENTITY;

ENTITY user_def_coll_spi
  SUBTYPE OF (spi);
END_ENTITY;

ENTITY user_def_coll_spiv
  SUBTYPE OF (spiv);
END_ENTITY;

ENTITY vector_w_magnitude;
  with_vect_w_mag_id        : vect_w_mag_id;
  of_eq_shk_move_dir        : OPTIONAL SET [1:?] OF eq_shk_move_dir;
UNIQUE
  with_vect_w_mag_id;
END_ENTITY;
```

```
ENTITY vert_ladder_occur
  SUBTYPE OF (o_f_part_occurr);
  has_vert_ldr_rung_occ     : OPTIONAL SET [1:?] OF vert_ldr_rung_occ;
  is_occur_of_spec_vert_ladder : spec_vert_ladder;
  connected_by_attachment_occurr : OPTIONAL SET [1:?] OF attachment_occurr;
  connected_by_vert_ldr_clip_occ : OPTIONAL SET [1:?] OF vert_ldr_clip_occ;
WHERE
  has_all_or_none_of (connected_by_attachment_occurr,
                      connected_by_vert_ldr_clip_occ);
END_ENTITY;

ENTITY vert_ldr_clip_occ
  SUBTYPE OF (o_f_fab_part);
  connected_by_attachment_occurr : attachment_occurr;
  connects_structural_part  : structural_part;
  connects_vert_ladder_occur : OPTIONAL vert_ladder_occur;
UNIQUE
  connected_by_attachment_occurr;
  connects_structural_part;
WHERE
  has_all_or_none_of (connected_by_attachment_occurr,
                      connects_structural_part);
END_ENTITY;

ENTITY vert_ldr_rung_occ
  SUBTYPE OF (o_f_fab_part);
  has_vert_ldr_rung_qty     : vert_ldr_rung_qty;
  of_vert_ladder_occur      : OPTIONAL SET [1:?] OF vert_ladder_occur;
END_ENTITY;

ENTITY vertex
  SUBTYPE OF (attachment_config);
END_ENTITY;

ENTITY vertical_extent;
  with_vertical_extent_id   : vertical_extent_id;
  defined_by_ceiling_sys_occ : OPTIONAL SET [1:?] OF ceiling_sys_occ;
UNIQUE
  with_vertical_extent_id;
END_ENTITY;

ENTITY weight_condition;
  has_wgt_cond_wgt_value    : OPTIONAL wgt_cond_wgt_value;
  has_weight_type           : weight_type;
  has_weight_context        : weight_context;
  has_c_o_g_context_type    : OPTIONAL SET [1:?] OF c_o_g_context_type;
  has_n_date_and_time       : n_date_and_time;
  has_n_person_and_org      : n_person_and_org;
  has_c_o_g                 : OPTIONAL c_o_g;
  of_spec_eng_part_impl     : OPTIONAL spec_eng_part_impl;
```

```
UNIQUE
  has_weight_context,
    has_weight_type,
    has_n_person_and_org,
    has_n_date_and_time;
END_ENTITY;

ENTITY weight_line_occ
  SUBTYPE OF (acc_ldr_maj_pt_occ);
END_ENTITY;

ENTITY window_occurr
  SUBTYPE OF (device_occurr);
END_ENTITY;

ENTITY zone_occurr
  SUBTYPE OF (space_spiv_occurr);
END_ENTITY;

(*RULE concatenated_attr_exclusion FOR (path_arc,
                                path_node);*)
(* to be written *)

(*
  for each
     (path_arc.ends_at_path_node,
      path_node.ends_path_arc) pair
  there must not be an
     (path_arc.begins_at_path_node,
      path_node.begins_path_arc) pair
*)
(*END_RULE;*)

(*RULE concatenated_attr_exclusion FOR (spec_path_arc,
                                spec_path_node);*)
(* to be written *)

(*
  for each
     (spec_path_arc.ends_at_spec_path_node,
      spec_path_node.ends_spec_path_arc) pair
  there must not be an
     (spec_path_arc.begins_at_spec_path_node,
      spec_path_node.begins_spec_path_arc) pair
*)
(*END_RULE;*)


FUNCTION
  has_at_most_one_of ( arg1, arg2 : generic) : logical;
```

```
  RETURN ((EXISTS(arg1) AND (NOT (EXISTS(arg2))))
        OR
        (NOT (EXISTS(arg1)) AND EXISTS(arg2)));
END_FUNCTION;

FUNCTION
  has_at_least_one_of ( arg1, arg2 : generic) : logical;
  RETURN (EXISTS(arg1) AND (EXISTS(arg2)));
END_FUNCTION;

FUNCTION
  has_all_or_none_of ( arg1, arg2 : generic) : logical;
  RETURN ((EXISTS(arg1) AND (EXISTS(arg2)))
        OR
        (NOT(EXISTS(arg1) AND (NOT(EXISTS(arg2))))));
END_FUNCTION;


            END_SCHEMA; -- end of o_and_f
```

6. Implementation and Conformance Testing Guidelines

The successful use of this Applications Protocol requires that the translation processors used conform to this AP specification. The purpose of conformance testing is to increase the confidence that different implementations of the AP will be able to exchange information successfully.

This AP requires that the functionality of the outfit & furnishing (O&F) system constructs of the ARM be preserved in the translation into and out of the AIM-specified format. Therefore to support this AP, a system must support the constructs in the ARM in order to be compliant. An AP compliant processor must convert each O&F construct of the ARM into specified STEP Physical File construct of the AIM, with the required attributes and values. An AP compliant postprocessor must convert each STEP Physical File construct of the AIM into native constructs which replicate the geometry, attributes and relationships of the O&F constructs specified in the ARM. The functionality of the ARM O&F constructs must be preserved through these translation processes.

Because of the complexity of this AP it is not feasible to exhaustively test all functionality features of all possible ARM constructs.

6.1 Processor Conformance Requirements

The conformance requirements for implementation of this AP are:

<u>Preprocessor</u>

a) The neutral files created by a compliant preprocessor shall conform to the STEP Physical File format specification NO TAG.

b) The neutral files created by a compliant preprocessor shall contain only those STEP Physical File constructs defined in the AIM (section 5).

c) A compliant preprocessor shall convert each construct of the ARM into the corresponding construct(s) specified in the AIM.

<u>Postprocessor</u>

a) A compliant processor shall read and process files that adhere to the STEP Physical File format specification NO TAG.

b) A compliant postprocessor shall read and interpret files that contain the constructs specified by the AIM (section 5).

c) A compliant postprocessor shall convert each construct of the AIM into native constructs representing the ARM constructs (entities, attributes and relationships) from which the AIM construct was originally produced.

6.2 NIDDESC O&F Application Protocol Test Groups

The NIDDESC O&F Application Protocol test cases are divided into the following test groups:

TG-1: O&F System Structure
TG-2: O&F System Test
TG-3: Engineering Part Data
TG-4: Connectivity
TG-5: Attachments
TG-6: Insulation
TG-7: O&F Paths
TG-8: O&F Assembly
TG-9: O&F Joints

Each test group contains one or more test cases which are composed of a test purpose and a prose description of the test procedure organized into one or more test groups. When these prose descriptions are converted to a formal language and parameter values (identifiers and attribute values) are provided for the constructs described in the test cases in a set of test data, they can be used to generate an executable test case.

6.3 NIDDESC O&F Application Protocol Test Case Descriptions

This section describes the test cases in the various test groups in terms of their purpose and procedural description. These descriptions are phrased in terms appropriate to a postprocessor operation (e.g., "list", "retrieve", "find", etc) The corresponding preprocessor operations (e.g., "encode", "store", etc.) are to be substituted for preprocessor test formulation.

6.3.1 TG-1: O&F System Structure

Test Purposes: The purposes of this test(s) are to demonstrate the ability of the translator to process the product structure of a candidate O&F system model and represent the data associated with the O&F system.

a) For a given O&F System Occurrence, list its O&F_drawing_number_organization_ID and O&F_organization_drawing_number.

b) For the given O&F System Occurrence in (a), list its first level:

— Engineering Parts

6.3.2 TG-2: O&F System Test

Test Purposes: The purpose of this test(s) are to demonstrate the ability of the translator to process the data and structure of an O&F System Test entity.

a) For the O&F System System Occurrence in Section 6.3.1 (a) retrieve its O&F System Test entity and list its test_memo_number, test_memo_title and test_memo_ revision.

b) For the O&F System Test from (a), list all of its O&F_System_Occurrence_IDs.

6.3.3 TG-3: Engineering Part Data

Test Purposes: The purposes of this test(s) are to demonstrate the ability of the translator to process the data associated with the various principal subtypes of Engineering Part.

a) For an Equipment Occurrence, retrieve and list its:

— engineering_part_description
— engineering_part_specification
— engineering_part_material
— engineering_part_material_specification
— engineering_part_part_number_organization_ID
— engineering_part_organization_part_number
— engineering_part_drawing_number_organization_ID
— engineering_part_organization_drawing_number
— engineering_part_organization_drawing_find_number
— engineering_part_weight
— engineering_part_maximum_allowable_weight
— engineering_part_center_of_gravity
— engineering_part_manufacturer_name
— engineering_part_manufacturer_part_number
— NAVSEA_drawing_number
— allowance_parts_list_number
— specification_standard
— thickness
— width
— length
— functional_group_code
— engineering_part_location_description
— engineering_part_required_shock_class
— equipment_source
— equipment_manufacturer_drawing_number
— equipment_shock_qualification_status
— equipment_interchangeability
— equipment_input_power_at_rated_condition
— equipment_output_power
— equipment_rated_capacity
— equipment_safety_consideration_description
— equipment_foundation_finish
— equipment_alignment_flatness_tolerance
— equipment_alignment_angularity_tolerance
— each of its Equipment Installation Instruction installation_instruction_ID's
— each of its Equipment Removal Route Instruction instruction_ID's
— each Equipment Applicable Specification specification_ID
— equipment_name
— equipment_required_insulation_type
— equipment_required_insulation_thickness
— equipment_design_pressure
— equipment_design_temperature
— each of its Equipment Required Test test_ID's

— equipment_system_conformance_specification_ID
— each of its Equipment Operating Conditions
  — system_operating_condition_ID
  — equipment_heat_dissipation_to_air
  — equipment_heat_dissipation_to_FW
  — equipment_heat_dissipation_to_SW
  — equipment_vibration_frequency
  — equipment_vibration_amplitude
  — - equipment operating_condition_description
  — equipment_operating_condition_ID
  — equipment_flow_rate
— its Equipment Resilient Mount Data equipment_ resilient_mount_specification_ID and, for each of its Equipment Shock Movement Directions their:
  — equipment_inertia
  — equipment_product_of_inertia
  — equipment_shock_movement_direction
  — equipment_shock_movement_magnitude

b) For a Protective Coat System Occurrence, retrieve and list its:
— protective_coat_quantity
— protective_coat_coverage_area
— surface_protection
— protective_coat_formula_type
— protective_coat_color
— coat_thickness
— engineering_part_density
— engineering_part_description for the part that it coats

c) For a Nonstructural Bulkhead Attaching System, retrieve and list its:
— nonstructural_panel_type
— the engineering_part_description for all parts that connect two panels

d) For an Inclined Ladder, retrieve and list its:
— inclined_ladder_handrail_type
— inclined_ladder_angle_with_deck
— inclined_ladder_tread_spacing
— inclined_ladder_tread_location
— inclined_ladder_tread_width_value for the top tread
— inclined_ladder_tread_width_value for a non-top tread
— for an upper inclined_ladder_lug_type, give the engineering_part_description that it attaches to
— for an lower inclined_ladder_lug_type, give the engineering_part_description that it attaches to

e) For a Vertical Ladder, retrieve and list its:
— vertical_ladder_clip_occurrence
— the engineering_part_description for all parts connected to the vertical_ladder_clip
— vertical_ladder_rung_quantity

f) For a Climber Safety Rail, retrieve and list its:

— climber_safety_rail_bracket occurrences
— the engineering_part_description for all parts connected to the climber_safety_rail bracket_occurrences

g) For a Portable Ladder, retrieve and list its:
— portable_ladder_type
— for its in-use condition:
— portable_ladder_in-use_location_description
— its in-use_center_of_gravity

h) For an Accommodation Ladder, retrieve and list its:
— accommodation_ladder_tread_quantity
— for each of its Major Parts:
— its engineering_parts_description
— in-use_center_of_gravity
— its in-use_location_description

i) For a Deck Covering System Occurrence, retrieve and list its:
— engineering_parts_description for:
— decorative chips occurrence
— strips occurrence
— deck_covering_layer_quantity
— deck_covering_coverage_area
— deck_covering_edge_requirement
— surface_preparation
— for a particular layer,
— deck_covering_layer_number
— deck_covering_code_ID
— deck_covering_grade_description
— deck_covering_formula_name
— deck_covering_color
— - thickness

j) For a Grating, retrieve and list its:
— grating_type
— distance_between_cross_bars
— distance_between_bearing_bars

k) For a Floor Plate Occurrence, retrieve and list its floor_plate_type

l) For a Handrail Occurrence, retrieve and list its:
— rail_design_type
— for its stanchion_connection_system list the engineering_part_descriptions

6.3.4 TG-4: Connectivity

Test Purposes: The purposes of this test(s) are to demonstrate the ability of the translator to process a connected set of Engineering parts and to verify their compatibility.

a) For the O&F System identified in Section 6.3.1 (a), retrieve its first/next Engineering Part Occurrence.

b) For this Engineering Part Occurrence, retrieve its first/next O&F End Occurrence

c) For the O&F End Occurrence in (b), retrieve its O&F Interface Occurrence

   c.1) If the O&F End Occurrence has no O&F Interface Occurrence, list the engineering_part_description, the engineering_part_occurrence_ID (SPIV_ID) and the message "Free End"

   c.2) If the O&F Interface Occurrence in (c) is not of the type O&F Joint Occurrence, return to (b)

   c.3) If all of the O&F End Occurrence associated with the Engineering Part Occurrence have been examined and none have an associated O&F Interface Occurrence of type O&F Joint Occurrence, print the Engineering Part Occurrence's engineering_part_description, engineering_part_occurrence_ID (SPIV_ID) and the message "Part has no joint connections." and return to (a).

d) For the O&F Joint Occurrence of c.1., retrieve its other O&F End Occurrence

e) Retrieve and list for both O&F End Occurrences at the O&F Joint Occurrence its Engineering Part Occurrence.

f) Using the Engineering Part Occurrence from (e), continue with step (b) unless all Engineering Part Occurrences in the O&F System Occurrence from (a) have been traversed.

6.3.5 TG-5: Attachments

Test Purposes: The purposes of this test(s) are to demonstrate the ability of the translator to process the structure and data elements associated with an Attachment entity.

a) For the O&F System identified in Section 6.3.1 (a), retrieve an (other) Engineering Part Occurrence having an Attachment End Occurrence.

b) For the Attachment End Occurrence in (a) retrieve its Attachment Occurrence, its other Attachment End Occurrence and the entity to which that end is associated.

c) If the entity from (b) is not of a type Attaching Part Occurrence, return to (a).

d) For the Attachment Occurrence in (a), list the following:

   — its associated attached/penetrating)object_ID (SPIV_ID of the O&F item)
   — its attachment_configuration_dimensionality
   — its attachment_configuration_function

6.3.6 TG-6: Insulation

Test Purposes: The purposes of this test(s) are to demonstrate the ability of the translator to process the structure and data elements associated with the insulation of an Engineering Part.

a) For the O&F System identified in Section 6.3.1 (a), retrieve an Engineering Part Occurrence having an Attachment End Occurrence. For this Attachment/Insulation End Occurrence retrieve its Attachment Occurrence.

b) For the Attachment Occurrence from (a) retrieve its opposite Attachment End Occurrence and its associated Attaching/Penetrated Object.

c) If the Attaching/Penetrated Object is not of type Insulation Part Occurrence, return to (a).

d) For the O&F Part Occurrence from (a), retrieve its required_thermal_insulation_specification_ID. If this value is null, return to (a).

e) For the Insulation Part Occurrence of (c), retrieve its specific_insulation_part_ID (SPIV_ID) and its total_part_insulation_thickness, insulation_type and thermal_coefficient.

f) For the O&F Part Occurrence from (a):

    f.1) If it has a non-null role with Insulation Envelope Occurrence, list its insulation_occurrence_envelope_ID and the message "Occurrence-Defined Insulation Geometry" and proceed to (a) to find the fixed geometry-type object unless one has already been found in which case terminate the test.

    f.2) If it has a non-null role with Specific Engineering Part, proceed to (g).

g) Retrieve the Specific Engineering Part of the Engineering Part Occurrence from (a).

h) Retrieve the Specific Part Envelope of the Specific Engineering Part from (g).

    h.1) If the Specific Part Envelope from (g) is not of type Specific Insulation Envelope and all Specific Part Envelopes for this part have been examined, print the message "Fixed Geometry Object part requiring insulation has no Specific Insulation Envelope" and return to try another part at (a).

    h.2) If the Specific Part Envelope is of type Specific Insulation Envelope, print its insulation_envelope_occurrence_ID and the message "Fixed-Geometry Insulation Envelope".

6.3.7 TG-7: O&F Paths

Test Purposes: The purposes of this test(s) are to demonstrate the ability of the translator to process the path geometry information associated with the O&F Part Occurrences.

a) For the O&F System identified in Section 6.3.1 (a), retrieve its first/next O&F Interconnection Occurrence. If all O&F Interconnections have been processed, proceed to (e).

b) For the O&F Interconnection Occurrence retrieve its first/next Path Arc.

b.1) If the O&F Interconnection Occurrence has no Path Arc, print its O&F_interconnection_ID (SPIV_ID) and the message "Missing Path Arc" and return to (a).

b.2) If all Path Arcs for this O&F Interconnection Occurrence have been processed, return to (a).

c) For the Path Arc from (b) retrieve its beginning and ending path_node_IDs.

c.1) If the path_node_IDs are identical, print the path_arc_ID, the path_node_ID and the message "Error: Identical start and end path node for Path Arc" and return to (b).

d) For the Path Arc from (b) retrieve and print the following and return to (b):

— O&F_interconnection_ID (SPIV_ID)
— path_arc_ID
— path_arc_type_value
— path_arc_center_data
— path_arc_radius_data
— start path_node_ID
— end path_node_ID

e) For the same O&F System Occurrence, retrieve its first/next O&F Part Occurrence. If all O&F Part Occurrences have been processed, stop.

f) For the O&F Part Occurrence from (e), retrieve its first/next Path Arc.

f.1) If it has none, print the O&F_part_Occurrence_ID and the message "O&F Part Occurrence missing Path Arc" and return to (e).

f.2) If all have been processed, return to (e).

g) For the Path Arc from (f), retrieve its beginning and ending path_node_IDs. If the path_node_IDs are identical, print the path_arc_ID, the path_node_ID and the message: "Error: Identical start and end path node for Path Arc" and return to (f).

h) For the Path Arc from (f), retrieve and print the following and return to (f):

— O&F_part_ID
— path_arc_ID
— path_arc_type_value
— path_arc_center_data
— path_arc_radius_data
— start path_node_ID
— end path_node_ID

6.3.8 TG-8: O&F Assembly

Test Purposes: The purposes of this test(s) are to demonstrate the ability of the translator to process the structure and data associated with the O&F Assembly entity.

a) For a given O&F Assembly Occurrence, retrieve and list the following:

- assembly_name
- O&F_assembly_type
- O&F_shop_drawing_number
- each Assembly Installation Instruction's assembly_instruction_number and assembly_instruction_description
- each Assembly Assembly Instruction's assembly_instruction_number and assembly_instruction_description
- each Assembly Coating Instruction's assembly_instruction_number and assembly_instruction_description
- each Assembly Insulation Instruction's assembly_instruction_number and assembly_instruction_description
-

b) For the O&F Assembly of (a) retrieve and list each of its member engineering_part_occurrence_IDs.

c) For the O&F Assembly in (a), retrieve and identify for each of its assembly_end_IDs (SPIV_ID) and their assembly_end_preparation.

d) For the O&F Assembly in (a), retrieve and identify for each of its O&F Fabrication Part whether it is of type macro part or explicit geometry part.

- If the O&F Fabrication Part is of type macro, list the following:
  - its OFP_standard_macro_ID
  - each of its OFP_standard_shape_macro_parameters
- If the O&F Fabrication Part is of type explicit geometry, list the following:
  - each of its O&F_fabrication_piece_IDs

6.3.9 TG-9: O&F Joints

Test Purposes: The purposes of this test(s) are to demonstrate the ability of the translator to process the structure and data associated with an O&F Joint entity.

a) For a given O&F Joint Occurrence, retrieve and list its:

- O&F_joint_type
- joint_joining_specification_ID
- joint_test_requirements_ID
- joint_inspection_requirement_ID
- joint_fabrication_specification_ID
- engagement_distance_value
- sealant_type_name
- joining_type_name
- joint_tightness_name

b) For the O&F Joint Occurrence of (a), retrieve its fastener_set_occurrence_ID and fastener_set_type and print these values.

c) For the Fastener Set Occurrence from (b), retrieve its Specific Fastener Set.

d) For the Specific Fastener Set from (c), retrieve all fastener Usages and for each print its:

- specific_fastener_ID
- fastener_quantity_value

Annex A

(Normative)

AIM EXPRESS expanded listing

This Section will be developed in future versions of the AP

Annex B

(Normative)

AIM Short Names

The following table gives the abbreviated forms for names defined in this Application Protocol. In addition to the full and short names, the table also shows the entity type (i.e. External NOLOT, LOT or AIM Implementation Points)

FULL NAME	ABBREVIATED NAME	Type
AC_POWER_CHARACTERSTIC	AC-POWER-CHAR	N
ACCESS_DEVICE_OCCURRENCE	ACCESS-DEV-OCCURR	N
ACCOMMODATION_LADDER_ATTACHING_PART_OCCURRENCE	ACC-LDR-ATT-PT-OCC	N
ACCOMMODATION_LADDER_IN_USE_PART_LOCATION	ACC-LDR-IU-PT-LOC	L
ACCOMMODATION_LADDER_MAJOR_PART_OCCURRENCE	ACC-LDR-MAJ-PT-OCC	N
ACCOMMODATION_LADDER_OCCURRENCE	ACCOM-LDR-OCC	N
ACCOMMODATION_LADDER_PART_OCCURRENCE	ACC-LDR-PART-OCC	N
ACCOMMODATION_LADDER_SYSTEM_OCCURRENCE	ACCOMM-LAD-SYS-OCC	N
ACCOMMODATION_LADDER_TREAD_QUANTITY	ACC-LDR-TREAD-QTY	L
AIR_HEAT_RATE	AIR-HEAT-RATE	N
AIR_HEAT_RATE_VALUE	AIR-HEAT-RATE-VAL	L
ALLOWANCE_PARTS_LIST_NUMBER	ALL-PARTS-LIST-NO	L
ANGLE_TOLERANCE	ANGLE-TOLERANCE	N
ANGLE_TOLERANCE_VALUE	ANG-TOL-VALUE	L
APPROVAL_RELATIONSHIP	APPROVAL-RELAT	N
APPROVAL_EVENT	APPROVAL_EVENT	N
APPROVAL_STATUS	APPROVAL-STATUS	A
ASSEMBLY_ASSEMBLY_INSTRUCTION	ASSY-ASSY-INSTRUCT	N
ASSEMBLY_COATING_INSTRUCTION	ASSY-COAT-INSTRUCT	N
ASSEMBLY_END	ASSEMBLY-END	N
ASSEMBLY_END_PREPARATION	ASSY-END-PREP	L
ASSEMBLY_INSTALLATION_INSTRUCTION	ASSY-INSTALL-INSTR	N
ASSEMBLY_INSTRUCTION	ASSY-INSTRUCTION	N
ASSEMBLY_INSTRUCTION_DESCRIPTION	ASSY-INSTR-DESCRIP	L
ASSEMBLY_INSTRUCTION_NUMBER	ASSY-INSTR-NO	L
ASSEMBLY_INSTRUCTION_TYPE	ASSY-INSTR-TYPE	L
ASSEMBLY_INSULATION_INSTRUCTION	ASSY-INSUL-INSTR	N
ASSEMBLY_NAME	ASSEMBLY-NAME	L
ASSEMBLY_OCCURRENCE	ASSEMBLY-OCCURR	N
ASSEMBLY_SHOP_DRAWING_NUMBER	ASSY-SHOP-DWG-NO	L
ATTACHED_PENETRATING_OBJECT	ATTD-PENET-OBJ	N
ATTACHING_PART_OCCURRENCE	ATTACH-PART-OCCURR	N
ATTACHING_PENETRATED_OBJECT	ATTACH-PENET-OBJ	N
ATTACHMENT_CONFIGURATION	ATTACHMENT-CONFIG	N
ATTACHMENT_CONFIGURATION_DIMENSIONALITY	ATT-CONF-DIM	L
ATTACHMENT_CONFIGURATION_FUNCTION	ATTACH-CONFIG-FUNC	L
ATTACHMENT_CONFIGURATION_IDENTIFICATION	ATTACH-CONFIG-ID	L
ATTACHMENT_END_OCCURRENCE	ATTACH-END-OCCURR	N
ATTACHMENT_OCCURRENCE	ATTACHMENT-OCCURR	N
ATTACHMENT_POSITIONAL_DEPENDENCY	ATTACH-POSIT-DEP	N
BOTTOM_SHELL_DRAIN_PLUG_OCCURRENCE	BOT-SHL-DR-PLUG-OC	N
BRACKET_ASSEMBLY_OCCURRENCE	BRACKET-ASSY-OCC	N
BRIDLE_ASSEMBLY_OCCURRENCE	BRIDLE-ASSY-OCC	N
CATALOG	CATALOG	N
CATALOG_KEY_FIELD	CATALOG-KEY-FIELD	N

FULL NAME	ABBREVIATED NAME	Type
CATALOG_NAME	CATALOG-NAME	L
CATALOG_REFERENCE_DEFINITION	CATALOG-REF-DEFIN	L
CATALOG_REFERENCE_ELEMENT	CATALOG-REFER-ELEM	N
CATALOG_REFERENCE_ELEMENT_VALUE	CATAL-REF-ELEM-VAL	L
CATALOG_REFERENCE_IDENTIFIER	CATALOG-REFER-ID	N
CATALOG_REFERENCE_IDENTIFIER_VALUE	CATALOG-REF-ID-VAL	L
CEILING-ATTACHMENT-SYSTEM	CEILING-ATTACH-SYS	N
CEILING-PANEL-OCCURRENCE	CEILING-PANEL-OCC	N
CEILING-SYSTEM-OCCURRENCE	CEILING-SYS-OCC	N
CENTER-OF-GRAVITY	C-O-G	N
CENTER-OF-GRAVITY-CONTEXT	C-O-G-CONTEXT	N
CENTER-OF-GRAVITY-IDENTIFIER	C-O-G-CONTEXT-ID	L
CHANGE	CHANGE	N
CHANGE_ALTERNATIVE	CHANGE-ALTERNATIVE	N
CHANGE_REVISION_STATUS	CHG-REV-STATUS	L
CHANGE_STATUS	CHANGE-STATUS	L
CHANGE_STATUS_EVENT	CHANGE-STAT-EVENT	N
CHANGE_TYPE	CHANGE-TYPE	L
CLIMBER_SAFETY_RAIL_BRACKET_OCCURRENCE	CL-SAF-RL-BKT-OCC	N
CLIMBER_SAFETY_RAIL_OCCURRENCE	CLIMB-SAF-RAIL-OCC	N
COLOR_IDENTIFIER	COLOR-ID	L
COMPARTMENT_BOUNDARY	COMPART-BOUNDARY	N
COMPARTMENT_BOUNDARY_SIDE	COMP-BOUNDARY-SIDE	L
COMPARTMENT_EXTERIOR_BOUNDARY	COMP-EXT-BOUNDARY	N
COMPARTMENT_EXTERIOR_BOUNDARY_NAME	COMP-EXT-BOUND-NAM	L
COMPARTMENT_HEIGHT	COMP-HEIGHT	N
COMPARTMENT_HEIGHT_VALUE	COMP-HEIGHT-VAL	L
COMPARTMENT_INTERFACE	COMPARTMENT-INTERF	N
COMPARTMENT_NAME	COMPARTMENT-NAME	L
COMPARTMENT_NUMBER	COMPART-NUMBER	L
COMPARTMENT_OCCURRENCE	COMPARTMENT-OCCURR	N
COMPARTMENT_TIGHTNESS_CRITERIA	COMPART-TIGHT-CRIT	L
COMPARTMENT_TIGHTNESS_TEST_ELEMENT	COMPART-TIGHT-T-E	N
COMPARTMENT_WIDTH	COMP-WIDTH	N
COMPARTMENT_WIDTH_VALUE	COMP-WIDTH-VAL	L
COMPONENT_SHIP_PRODUCT_ITEM	COMPONENT-SPI	N
COMPONENT_SHIP_PRODUCT_ITEM_VERSION	COMPONENT-SPIV	N
CONFIGURATION_CHANGE	CONFIGURATION-CHG	N
CONFIGURATION_SHIP_PRODUCT_ITEM	CONFIG-SPI	N
CONFIGURATION_SHIP_PRODUCT_ITEM_VERSION	CONFIG-SPIV	N
CONTEXT_SHIP_PRODUCT_ITEM	CONTEXT-SPI	N
CONTEXT_SHIP_PRODUCT_ITEM_VERSION	CONTEXT-SPIV	N
COST	COST	L
CREATION_MODIFICATION_DELETION_EVENT	CRE-MOD-DEL-EVENT	N
DATE_AND_TIME	DATE-AND-TIME	A
DC_POWER_CHARACTERISTIC	DC-POWER-CHAR	N
DAVIT_OCCURRENCE	DAVIT-OCC	N
DECK_COVERING_CODE_IDENTIFIER	DK-COV-CODE-ID	L
DECK_COVERING_COLOR	DECK-COVER-COLOR	L
DECK_COVERING_COVERAGE_AREA	DK-COVER-COV-AREA	L
DECK_COVERING_EDGE_REQUIREMENT	DECK-COV-EDGE-RQT	L
DECK_COVERING_FORMULA_NAME	DECK-COV-FORM-NAME	L
DECK_COVERING_GRADE_DESCRIPTION	DECK-COV-GRADE-DIS	L
DECK_COVERING_LAYER_NUMBER	DECK-COV-LAYER-NO	L
DECK_COVERING_LAYER_QUANTIT	DK-COV-LAYER-QTY	L
DECK_COVERING_OCCURRENCE	DECK-COV-OCCURR	N
DECK_COVERING_SURFACE_PREPARATION	DK-COV-SURF-PREP	L
DECK_COVERING_SYSTEM_OCCURRENCE	DECK-COV-SYS-OCCUR	N
DECK_COVERING_THICKNESS	DK-COV-THK	N
DECK_COVERING_THICKNESS_VALUE	DK-COV-THK-VAL	L
DECORATIVE_CHIPS_OCCURRENCE	DEC-CHIPS-OCC	N
DEFLECTION_COVER_OCCURRENCE	DEFLECT-COVER-OCC	N
DEPENDENT_ATTACHMENT_END	DEPEND_ATTACH_END	N
DESIGN_PRESSURE	DESIGN-PRESSURE	N
DESIGN_PRESSURE_VALUE	DES-PRESSURE-VALUE	L
DESIGN_TEMPERATURE	DESIGN-TEMPERATURE	N
DESIGN_TEMPERATURE_VALUE	DES-TEMP-VALUE	L

FULL NAME	ABBREVIATED NAME	Type
DEVICE_OCCURRENCE	DEVICE-OCCURR	N
DISCRETE_PART_OCCURRENCE	DISCR-PART-OCCURR	N
DISCRETE_SYSTEM_OCCURRENCE	DISC-SYSTEM-OCCURR	N
DISTANCE_BETWEEN_BEARING_BARS	DIST-BETW-BEAR-BAR	L
DISTANCE_BETWEEN_CROSS_BARS	DIST-BET-CROSS-BAR	L
DOOR_ATTACHMENT_SYSTEM	DOOR-ATT-SYS	N
DOOR_OCCURRENCE	DOOR-OCCURRENCE	N
DROP_HEIGHT_VALUE	DROP-HEIGHT-VALUE	L
ELECTRICAL_INSULATION_RESISTANCE_TEST_ELEMEN	ELECT-INS-RES-T-E	N
END_SHIP_PRODUCT_ITEM_VERSION_OCCURRENCE	END-SPIV-OCCURR	N
ENGAGING_DISTANCE	ENG-DISTANCE	N
ENGAGING_DISTANCE_VALUE	ENG-DISTANCE-V	L
ENGINEERING PART (EXTERNAL REFERENCE)	ENG-PART-EXTERNAL	N
ENGINEERING_PART_CENTER_OF_GRAVITY	EP-CNTR-OF-GRAVITY	A
ENGINEERING_PART_DENSITY_VALUE	EP-DENSITY-VALUE	N
ENGINEERING_PART_DENSITY_VALUE (LOT)	EP-DENSITY-VALUE-L	L
ENGINEERING_PART_DESCRIPTION	E-P-DESCRIPTION	L
ENGINEERING_PART_IDENTIFIER	EP-IDENTIFIER	N
ENGINEERING_PART_LOCATION_DESCRIPTION	EP-LOCATION-DESCR	L
ENGINEERING_PART_MANUFACTURER_NAME	EP-MANUF-NAME	L
ENGINEERING_PART_MANUFACTURER_PART_NUMBER	EP-MANUF-PART-NO	L
ENGINEERING_PART_MATERIAL	E-P-MATERIAL	L
ENGINEERING_PART_MATERIAL_SPECIFICATION	E-P-MATL-SPEC	L
ENGINEERING_PART_MAXIMUM_ALLOCATED_WEIGHT_VALUE	EP-MAX-ALL-WT-VAL	L
ENGINEERING_PART_MAXIMUM_ALLOCATED_WEIGHT_VALUE	EP-MAX-ALL-WT-VAL	L
ENGINEERING_PART_NUMBER_ORGANIZATION_IDENTIFIER	EP-DWG-NO-ORG-ID	L
ENGINEERING_PART_OCCURRENCE	ENG-PART-OCCUR	N
ENGINEERING_PART_OCCURRENCE (EXTERNAL REFERENCE)	ENG-PART-OCCUR-EXT	E
ENGINEERING_PART_OCCURRENCE_DESIGN	ENG-PART-OCC-DES	N
ENGINEERING_PART_OCCURRENCE_IMPLEMENTATION	ENG-PART-OCC-IMP	N
ENGINEERING_PART_OCCURRENCE_SHAPE_REPRESENTATION	EP-OCC-SH-REP	A
ENGINEERING_PART_OCCURRENCE_SHAPE_REPRESENTATION_IDENTIFIER	EP-OCC-SHAP-REP-ID	L
ENGINEERING_PART_OCCURRENCE_SHAPE_REPRESENTATION_TYPE	EP-OCC-SH-REP-TYPE	L
ENGINEERING_PART_ORGANIZATION_DRAWING_FIND_NUMBER	EP-ORG-DWG-FN	L
ENGINEERING_PART_ORGANIZATION_DRAWING_NUMBER	EP-ORG-DWG-NO	L
ENGINEERING_PART_ORGANIZATION_PART_NUMBER	EP-ORG-PART-NO	L
ENGINEERING_PART_PART_NUMBER_ORGANIZATION_IDENTIFIER	EP-PART-NO-ORG-ID	L
ENGINEERING_PART_REQUIRED_SHOCK_CLASS	EP-RQD-SHOCK-CLASS	L
ENGINEERING_PART_SPECIFICATION	E-P-SPECIFICATION	L
ENGINEERING_SYSTEM_OCCURRENCE	ENG-SYSTEM-OCCURR	N
ENVELOPE_OCCURRENCE	ENVELOPE-OCCURR	N
EQUIPMENT_APPLICABLE_SPECIFICATIONS	EQUIP-APPL-SPECS	N
EQUIPMENT_DESCRIPTION	EQ-DESCRIPTION	L
EQUIPMENT_FIXED_MOUNT_DATA	EQ-FIX-MOUNT-DATA	N
EQUIPMENT_FIXED_MOUNT_TYPE	EQ-FIX-MOUNT-TYPE	L
EQUIPMENT_FOUNDATION_FINISH	EQUIP-FDN-FINISH	L
EQUIPMENT_INSTALLATION_INSTRUCTION	EQ-INSTALL-INST	N
EQUIPMENT_INTERCHANGABILITY	EQ-INTERCHANGE	N
EQUIPMENT_MANUFACTURER_DRAWING_NUMBER	EQ-MNFR-DWG-NO	L
EQUIPMENT_MOUNT_DATA_IDENTIFIER	EQ-MNT-DATA-ID	L
EQUIPMENT_MOUNTING	EQUIP-MOUNTING	N
EQUIPMENT_MOUNTING_DATA	EQUIP-MOUNT-DATA	N
EQUIPMENT_NAME	EQUIP-NAME	L
EQUIPMENT_OCCURRENCE	EQUIP-OCCURR	N
EQUIPMENT_OCCURRENCE_DESIGN	EQUIP-OCC-DESIGN	N
EQUIPMENT_OCCURRENCE_IMPLEMENTATION	EQUIP-OCC-IMPLEM	N
EQUIPMENT_OPERATING_CONDITION	EQUIP-OPER-COND	N
EQUIPMENT_OPERATIONAL_CONDITION_DESCRIPTION	EQ-OPER-COND-DESC	L
EQUIPMENT_OPERATIONAL_CONDITION_IDENTIFIER	EQ-OPER-COND-ID	L
EQUIPMENT_POWER	EQUIPMENT-POWER	N
EQUIPMENT_POWER	EQUIPMENT-POWER-N	N
EQUIPMENT_REMOVAL_INSTRUCTION_IDENTIFIER	EQ-REM-INSTR-ID	L
EQUIPMENT_REMOVAL_ROUTE_INSTRUCTION	EQ-REMOV-RTE-INSTR	N
EQUIPMENT_REQUIRED_INSULATION_TYPE	EQ-REQD-INSUL-TYPE	L
EQUIPMENT_REQUIRED_TEST	EQUIP-REQD-TEST	N
EQUIPMENT_RESILIENT_MOUNTING_DATA	EQ-RES-MOUNT-DATA	N
EQUIPMENT_RESILIENT_MOUNTING_SPECIFICATION_ID	EQ-RES-MT-SPEC-ID	L

FULL NAME	ABBREVIATED NAME	Type
EQUIPMENT_SAFETY_DESCRIPTION	EQ-SAFETY-DESCR	L
EQUIPMENT_SHOCK_MOVEMENT_DIRECTION	EQ-SHK-MOVE-DIR	N
EQUIPMENT_SHOCK_MOVEMENT_DIRECTION_IDENTIFIER	EQ-SHK-MOV-DIR-ID	L
EQUIPMENT_SHOCK_QUALIFICATION_STATUS	EQ-SHOCK-QUAL-STAT	L
EQUIPMENT_SOURCE	EQUIPMENT-SOURCE	L
EQUIPMENT_SPECIFICATION_ID	EQUIP-SPEC-ID	L
EQUIPMENT_SYSTEM_CONFORMANCE_SPECIFICATION_IDENTIFIER	EQ-SY-CONF-SPEC-ID	L
EQUIPMENT_SYSTEM_OPERATING_CONDITION	EQ-SY-OPER-COND	N
EQUIPMENT_TEST_ID	EQUIP-TEST-ID	L
EVENT_DESCRIPTION	EVENT-DESCRIPTION	L
EVENT_TYPE	EVENT-TYPE	L
EXTERNALLY_DEFINED_ITEM	EX_DEF_ITEM	N
EXTERNALLY_DEFINED_ITEM_LABEL	EX_DEF_ITEM_LABEL	L
EXTERNALLY_DEFINED_ITEM_SHAPE_REFERENCE_TYPE	EX_DEF_IT_SH_R_T	L
EXTERNALLY_DEFINED_ITEM_SHAPE_DEFINITION_TYPE	EX_DEF_IT_SH_D_T	L
EXTERNAL_SOURCE	EXTERNAL_SOURCE	N
EXTERNAL_SOURCE_LABEL	EXTERNAL_SOURCE	L
EXTERNAL_SPIV	EXTERNAL_SPIV	N
EXTERIOR_INSULATION_ENVELOPE	EXT-INSUL-ENV	N
FACE	FACE	N
FALSE_DECK_ATTACHMENT_SYSTEM	FALSE-DECK-ATT-SYS	N
FALSE-DECK_PANEL_OCCURRENCE	F-D-PANEL-OCC	N
FALSE_DECK_SYSTEM_OCCURRENCE	FALSE-DECK-SYS-OCC	N
FASTENER_OCCURRENCE	FASTENER-OCCURR	N
FASTENER_QUANTITY	FASTENER-QUANTITY	N
FASTENER_QUANTITY_VALUE	FASTENER-QTY-VALUE	L
FASTENER_SET_OCCURRENCE	FASTENER-SET-OCCUR	N
FASTENER_SET_OCCURRENCE_IDENTIFIER	FAST-SET-OCCUR-ID	L
FASTENER_SET_TYPE	FASTENER-SET-TYPE	L
FASTENER_SET_USAGE	FASTENER-SET-USAGE	N
FASTENER_USAGE	FASTENER-USAGE	N
FEDERAL_STOCK_NUMBER	FED-STOCK-NO	L
FENDER_OCCURRENCE	FENDER-OCC	N
FUNCTIONAL_GROUP_CODE	FUNCT-GROUP-CODE	L
FUNCTIONAL_IDENTIFIER	FUNCT_ID	N
FUNCTIONAL_IDENTIFIER_CODE_BASE	FUNCT_ID_CODE	L
FLATNESS_TOLERANCE_LENGTH	FLAT-TOL-LENGTH	N
FLATNESS_TOLERANCE_LENGTH_VALUE	FLAT-TOL-LNGTH-VAL	L
FLOOR_PLATE_OCCURRENCE	FLOOR-PLATE-OCC	N
FLOOR_PLATE_TYPE	FLOOR-PLATE-TYPE	L
FLOW_RATE_CONDITION_VALUE	FLOW-RATE-COND-V	L
FRESH_WATER_HEAT_RATE	FW-HEAT-RATE	N
FRESH_WATER_HEAT_RATE_VALUE	FW-HEAT-RATE-VAL	L
GENERIC_END_SHIP_PRODUCT_ITEM_VERSION	GENERIC-END-SPIV	N
GENERIC_INTERFACE_SHIP_PRODUCT_ITEM_VERSION	GEN-INTERFACE-SPIV	N
GENERIC_PRODUCT_SHIP_PRODUCT_ITEM_VERSION	GENERIC-PROD-SPIV	N
GENERIC_SHIP_PRODUCT_ITEM	GENERIC-SPI	N
GENERIC_SHIP_PRODUCT_ITEM_VERSION	GENERIC-SPIV	N
GENERIC_SPACE_SHIP_PRODUCT_ITEM_VERSION	GENERIC-SPACE-SPIV	N
GRATING_OCCURRENCE	GRATING-OCCURRENCE	N
GRATING_TYPE	GRATING-TYPE	L
HANDRAIL_SYSTEM_OCCURRENCE	HANDRAIL-SYS-OCCUR	N
HINGE_OCCURRENCE	HINGE-OCCUR	N
HOIST_OCCURRENCE	HOIST-OCC	N
HULL	HULL	N
HULL_FITTING_OCCURRENCE	HULL-FTG-OCCURR	N
IDENTIFIER	IDENTIFIER	A
INCLINED_LADDER_ANGLE_WITH_DECK	INCL-LDR-ANG-DK	L
INCLINED_LADDER_HANDRAIL_TYPE	INCL-LDR-HANDRL-TY	L
INCLINED_LADDER_LUG_OCCURRENCE	INCL-LDR-LUG-OCCUR	N
INCLINED_LADDER_LUG_TYPE	INCL-LDR-LUG-TYPE	L
INCLINED_LADDER_OCCURRENCE	INCL-LADDER-OCCURR	N
INCLINED_LADDER_SHIELD_OCCURRENCE	INCL-LDR-SHIELD-OC	N
INCLINED_LADDER_TREAD_LOCATION	INCL-LDR-TRD-LOC	L
INCLINED_LADDER_TREAD_OCCURRENCE	INCL-LDR-TREAD-OCC	N
INCLINED_LADDER_TREAD_SPACE	INCL-LDR-TRD-SPACE	L
INCLINED_LADDER_TREAD_WIDTH	INCL-LDR-TRD-WIDTH	N

FULL NAME	ABBREVIATED NAME	Type
INCLINED_LADDER_TREAD_WIDTH_VALUE	I-TRD-WIDTH-VAL	L
INDEPENDENT_ATTACHMENT_END	IND_ATT_END	N
INERTIA	INERTIA	N
INERTIA_VALUE	INERTIA-VALUE	L
INSTALLATION_INSTRUCTION_IDENTIFIER	INST-INSTRUCT-ID	L
INSULATION_COVERING_OCCURRENCE	INSUL-COV-OCCURR	N
INSULATION_ENVELOPE_OCCURRENCE	INS-ENV-OCCURR	N
INSULATION_LENGTH	INSUL-LENGTH	N
INSULATION_LENGTH_VALUE	INSUL-LENGTH-VALUE	L
INSULATION_PART_OCCURRENCE	INSUL-PART-OCCURR	N
INSULATION_SHEATHING_OCCURRENCE	INS-SHEATH-OCC	N
INSULATION_SHEATHING_PERFORATIONS	INS-SHEATH-PERF	N
INSULATION_SHEET_OCCURRENCE	INS-SHEET-OCC	N
INSULATION_THICKNESS_VALUE	INSUL-THICK-VALUE	L
INSULATION_THICKNESS_VALUE	INSUL-THICKNESS	N
INSULATION_TYPE	INSUL-TYPE	L
INTERFACE_SHIP_PRODUCT_ITEM_VERSION_OCCURRENCE	INTERF-SPIV-OCCURR	N
INTERIOR_INSULATION_ENVELOPE	INT-INSUL-ENV	N
JOINING_TYPE_NAME	JOINING-TYPE-NAME	L
JOINT_FABRICATION_REQUIREMENT_IDENTIFIER	JNT-FAB-REQT-ID	L
JOINT_INSPECTION_REQUIREMENT_IDENTIFIER	JNT-INSP-REQT-ID	L
JOINT_JOINING_SPECIFICATION_IDENTIFIER	JNT-JOINING-SP-ID	L
JOINT_TEST_REQUIREMENT_IDENTIFIER	JNT-TEST-REQT-ID	L
JOINT_TIGHTNESS_NAME	JOINT-TIGHT-NAME	L
KEY_FIELD	KEY-FIELD	N
KEY_FIELD_NAME	KEY-FIELD-NAME	L
LABEL	LABEL	L
LADDER_RUNG_OCCURRENCE	LADDER-RUNG-OCCUR	N
LENGTH_VALUE	LENGTH-VALUE-L	N
LENGTH_VALUE	LENGTH-VALUE-LL	L
LENGTH_VALUE	LENGTH-VALUE-T	N
LENGTH_VALUE	LENGTH-VALUE-TL	L
LENGTH_VALUE	LENGTH-VALUE-W	N
LENGTH_VALUE	LENGTH-VALUE-W-L	L
LINEAL_ATTACHMENT_CONFIGURATION	LINEAL-ATTACH-CONF	A
LIZARD_ASSEMBLY_OCCURRENCE	LIZARD-ASSY-OCC	N
LIFELINE_PART_OCCURRENCE	LIFELINE-PART-OCC	N
LOAD_WEIGHT_VALUE	LOAD-WEIGHT-VALUE	L
LOCK_TYPE	LOCK-TYPE	L
MAINTENANCE_WORTHY	MAINT_WORTH	L
MEDIUM_FLOW	MEDIUM-FLOW	N
MEDIUM_FLOW_CONDITION	MEDIUM-FLOW-COND	N
MEDIUM_FLOW_IDENTIFIER	MEDIUM-FLOW-ID	L
MEDIUM_NAME	MEDIUM-NAME	L
MIL_STD_NUMBER	MIL-STD-NUMBER	L
MODULAR_QUANTITY	MODULAR-QTY	L
MODULAR_SECTIONS	MODULAR-SECTIONS	N
MOUNTING_LENGTH	MOUNT-LENGTH	N
MOUNTING_LENGTH_VALUE	MOUNT-LENGTH-VALUE	L
NAVSEA_DRAWING_NUMBER	NAVSEA-DWG-NO	L
NAVY_APPROVAL_STATUS	N-APPROVAL-STATUS	N
NAVY_DATE_AND_TIME	N-DATE-AND-TIME	N
NAVY_EXTERNALLY_DEFINED_ITEM	N_EX_DEF_ITEM	N
NAVY_IDENTIFIER	N-IDENTIFIER	N
NAVY_ORGANIZATION	N-ORGANIZATION	N
NAVY_PERSON_AND_ORGANIZATION	N-PERSON-AND-ORG	N
NON_STRUCTURAL_BULKHEAD_ATTACHING_PART_OCCURRENCE	N-S-BHD-ATT-PT-OCC	N
NON_STRUCTURAL_BULKHEAD_ATTACHING_SYSTEM	N-S-BHD-ATTACH-SYS	N
NON_STRUCTURAL_BULKHEAD_PANEL_OCCURRENCE	N-S-BHD-PANEL-OCC	N
NON_STRUCTURAL_BULKHEAD_SYSTEM_OCCURRENCE	N-S-BHD-SYS-OCCUR	N
NON_STRUCTURAL_PANEL_TYPE	N-S-PANEL-TYPE	L
NUMBER_OF_PHASES	NUMBER-OF-PHASES	N
OCCURRENCE_SHIP_PRODUCT_ITEM	OCCURRENCE-SPI	N
OCCURRENCE_SHIP_PRODUCT_ITEM_VERSION	OCCURRENCE-SPIV	N
OPENING_SHAPE_REPRESENTATION_TYPE	OPEN-SH-REP-TYPE	L
OPERATING_CONDITION_DESCRIPTION	OPER-COND-DESCRIPT	L
OPERATIONAL_TEST_ELEMENT	OPERATIONAL-T-E	N

FULL NAME	ABBREVIATED NAME	Type
ORGANIZATION	ORGANIZATION	A
ORGANIZATION_CHANGE_IDENTIFIER	ORG-CHANGE-ID	N
O&F_ASSEMBLY_OCCURRENCE	O-F-ASSEMBLY-OCCUR	N
O&F_ASSEMBLY_TYPE	O-F-ASSY-TYPE	L
O&F_DRAWING_NUMBER_ORGANIZATION_IDENTIFIER	OF-DWG-NO-ORG-ID	L
O&F_END_LOCATION_TYPE	O-F-END-LOC-TYPE	L
O&F_END_OCCURRENCE	O-F-END-OCCUR	N
O&F_END_OCCURRENCE_SHAPE_REPRESENTATION	OF-END-OCCUR-SH-RP	A
O&F_END_OCCURRENCE_SHAPE_REPRESENTATION_IDENTIFIER	OF-END-OCC-SH-R-ID	L
O&F_END_OCCURRENCE_SHAPE_REPRESENTATION_STYLE	OF-END-OCCUR-ST-RP	L
O&F_FABRICATION_PART	O-F-FAB-PART	N
O&F_FABRICATION_PART_BEND_BREAK_LINE_LAYOUT_CUTTING_GEOMETRY	OFP-BEND-BK-LI-L-G	N
O&F_FABRICATION_PART_CUTTING_GEOMETRY	OFP-CUT-GEOM	N
O&F_FABRICATION_PART_EXPLICIT_GEOMETRY_PART	OFP-EXPL-GEOM-PT	N
O&F_FABRICATION_PART_HOLE_PUNCH_LAYOUT_GEOMETRY	OFP-HOLE-LO-GEOM	N
O&F_FABRICATION_PART_IDENTIFIER	O-F-FAB-PART-ID	L
O&F_FABRICATION_PART_STANDARD_SHAPE_MACRO_IDENTIFIER	OFP-STD-SH-MAC-ID	L
O&F_FABRICATION_PART_STANDARD_SHAPE_MACRO_PARAMETER_NAME	OFP-ST-SH-MAC-P-N	L
O&F_FABRICATION_PART_STANDARD_SHAPE_MACRO_PART	OFP-STD-MAC-PT	N
O&F_FABRICATION_PART_STANDARD_SHAPE_MACRO_PARAMETER	OFP-STD-SH-MAC-PAR	N
O&F_FABRICATION_PART_STANDARD_SHAPE_MACRO_PARAMETER_VALUE	OFP-STD-SH-MAC-P-V	L
O&F_FABRICATION_PART_STANDARD_SHAPE_MACRO_PART	OFP-STD-SH-MAC-PT	N
O&F_FABRICATION_PIECE	O-F-FAB-PIECE	N
O&F_FABRICATION_PIECE_IDENTIFIER	O-F-FAB-PIECE-ID	L
O&F_FASTENER_TYPE	OF-FASTENER-TYPE	L
O&F_INTERCONNECTION_INTERFACE_OCCURRENCE	OF-INTERC-INTERF-O	N
O&F_INTERCONNECTION_OCCURRENCE	O-F-INTERCON-OCC	N
O&F_INTERFACE_OCCURRENCE	O-F-INTERF-OCCURR	N
O&F_JOINT_TYPE	OF-JOINING-TYPE	L
O&F_JOINT_JOINING_TYPE	OF-JOINT-JOIN-TYPE	N
O&F_JOINT_OCCURRENCE	O-F-JOINT-OCCURR	N
O&F_JOINT_OCCURRENCE_DESIGN	OF-JNT-OCCUR-DES	N
O&F_JOINT_OCCURRENCE_IMPLEMENTATION	OF-JNT-OCCUR-IMPL	N
O&F_JOINT_SEAL_TYPE	OF-JOINT-SEAL-TYPE	N
O&F_ORGANIZATION_DRAWING_NUMBER	OF-ORG-DWG-NO	L
O&F_PART_OCCURRENCE	O-F-PART-OCCURR	N
O&F_SYSTEM_INTERFACE_OCCURRENCE	O-F-SYS-INTERF-OCC	N
O&F_SYSTEM_OCCURRENCE	O-F-SYSTEM-OCCURR	N
O&F_SYSTEM_OCCURRENCE_DESIGN	OF-SYS-OCC-DESIGN	N
O&F_TEST	O-F-TEST	N
O&F_TEST_ELEMENT	O-F-TEST-ELEMENT	N
O&F_TEST_ELEMENT_IDENTIFIER	O-F-TEST-ELEM-ID	L
O&F_TIGHTNESS	OF-JOINT-TIGHTNESS	N
PARAMETER_SET	PARAMETER_SET	N
PART_ENVELOPE_IDENTIFIER	PART-ENV-ID-B	L
PART_ENVELOPE_OCCURREMCE	PART-ENV-OCC	N
PART_ENVELOPE_OCCURRENCE_SHAPE_REPRESENTATION	PART-ENV-OCC-SH-RP	A
PART_ENVELOPE_TYPE	PART-ENV-TYPE-B	L
PATH_ARC	PATH-ARC	N
PATH_ARC_IDENTIFIER	PATH-ARC-ID	L
PATH_ARC_SHAPE_REPRESENTATION	PATH-ARC-SH-REP	A
PATH_ARC_SHAPE_REPRESENTATION_IDENTIFIER	PATH-ARC-SH-REP-ID	L
PATH_ARC_TYPE	PATH-ARC-TYPE	L
PATH_NODE	PATH-NODE	N
PATH_NODE_IDENTIFIER	PATH-NODE-ID	L
PATH_NODE_SHAPE_REPRESENTATION	PATH-NODE-SH-REP	A
PATH_NODE_SHAPE_REPRESENTATION_ID	PATH-ND-SH-REP-ID	L
PATH_SPLIT	PATH-SPLIT	N
PATH_SPLIT_IDENTIFIER	PATH-SPLIT-ID	L
PERFORATION_LENGTH_VALUE	PER-LENGTH-VALUE	L
PERFORATION_LENGTH	PERF-LENGTH	N
PERSON_AND_ORGANIZATION	PERSON-AND-ORG	A
PHYSICAL_OCCURRENCE_SHIP_PRODUCT_ITEM	PHYSICAL-OCCUR-SPI	N
PHYSICAL_OCCURRENCE_SHIP_PRODUCT_ITEM_VERSION	PHYS-OCCURR-SPIV	N
PHYSICAL_SHIP_PRODUCT_ITEM	PHYSICAL-SPI	N
PHYSICAL_SHIP_PRODUCT_ITEM_VERSION	PHYSICAL-SPIV	N
PLATFORM_OCCURRENCE	PLATFORM-OCC	N

FULL NAME	ABBREVIATED NAME	Type
POINT_ATTACHMENT_CONFIGURATION	POINT-ATTACH-CONF	A
PORTABLE_LADDER_CONTITION	PORT-LDR-CONDITION	L
PORTABLE_LADDER_IN_USE_ATTACHMENT_OCCURRENCE	PORT-LDR-I-U-AT-OC	N
PORTABLE_LADDER_IN_USE_LOCATION_DESCRIPTION	I-U-PT-LDR-LOC-DESC	L
PORTABLE_LADDER_OCCURRENCE	PORT-LDR-OCCURR	N
PORTABLE_LADDER_STOWED_ATTACHMENT_OCCURRENCE	PORT-LDR-ST-ATT-OC	N
PORTABLE_LADDER_TYPE	PORT-LDR-TYPE	L
POST_OCCURRENCE	POST-OCC	N
POST_TYPE	POST-TYPE	L
POTENTIAL_SHIP_PRODUCT_ITEM_VERSION_CHANGE	POTENTIAL-SPIV-CHG	N
POWER_CHARACTERISTICS	POWER-CHAR	N
POWER_CHARACTERISTICS_ID	POWER-CHAR-ID	L
POWER_TYPE	POWER-TYPE	L
POWER_VALUE	POWER-VALUE	L
PRODUCT	PRODUCT	N
PRODUCT_IDENTIFIER	PRODUCT-ID	L
PRODUCT_OF_INERTIA	PROD-OF-INERTIA	N
PRODUCT_OF_INERTIA_VALUE	PROD-OF-INERTIA-V	L
PRODUCT_SHIP_PRODUCT_ITEM_VERSION_OCCURRENCE	PRODUCT-SPIV-OCCUR	N
PRODUCT_VERSION	PRODUCT-VERSION	N
PRODUCT_VERSION_IDENTIFIER	PROD-VER-ID	L
PROMOTION_EVENT	PROMOTION-EVENT	N
PROMOTION_LEVEL	PROMOTION-LEVEL	L
PROMOTION_OF_SHIP_PRODUCT_ITEM_VERSION	PROMOTION-OF-SPIV	N
PROTECTIVE_COATING_AREA_VALUE	PROT-COAT-AREA-V	L
PROTECTIVE_COATING_COAT_QUANTITY	PROT-COAT-QTY	L
PROTECTIVE_COATING_COLOR	PROT-COAT-COLOR	L
PROTECTIVE_COATING_COVERAGE_AREA	PROT-COAT-COV-AREA	N
PROTECTIVE_COATING_FORMULA_TYPE	PROT-COAT-FORM-TYP	L
PROTECTIVE_COATING_OCCURRENCE	PROT-COAT-OCCURR	N
PROTECTIVE_COATING_SYSTEM_OCCURRENCE	PROT-COAT-SYS-OCCU	N
PROTECTIVE_COATING_THICKNESS	PROT-COAT-THK	N
PROTECTIVE_COATING_THICKNESS_VALUE	PROT-COAT-THK-VAL	L
PROTECTIVE_COATING_TYPE	PROT-COAT-TYPE	N
RAIL_DESIGN_TYPE	RAIL-DESIGN-TYPE	L
RAIL_OCCURRENCE	RAIL-OCCURRENCE	N
REFERENCE_DEFINITION_SOURCE	REF_DEF_SOURCE	L
REMOVAL_ROUTE_ENVELOPE_OCCURRENCE	REMOVAL-RT-ENV-OCC	N
RESERVATION_DESCRIPTION	RESERVATION_DESC	L
RESERVATION_EVENT	RESERVATION_EVENT	N
RESERVATION_FLAG	RESERV_FLAG	L
ROPE_OCCURRENCE	ROPE-OCC	N
SAFETY_NET_OCCURRENCE	SAFETY-NET-OCCURR	N
SEALANT_TYPE_NAME	SEALANT-TYPE-NAME	L
SEA_WATER_HEAT_RATE	SW-HEAT-RATE	N
SEA_WATER_HEAT_RATE_VALUE	SW-HEAT-RATE-VAL	L
SHACKLE_OCCURRENCE	SHACKLE-OCC	N
SHAPE_REPRESENTATION_STYLE	SH-REP-STYLE	L
SHAPE_REPRESENTATION_STYLE	SH-REP-STYLE-B	L
SHAPE_REPRESENTATION_STYLE	SH-REP-STYLE-C	L
SHAPE_REPRESENTATION_STYLE	SHAPE-REP-STYLE	L
SHAPE_REPRESENTATION_STYLE	SHAPE-REP-STYLE-1	L
SHAPE_REPRESENTATION_STYLE	SHAPE-REP-STYLE-2	L
SHAPE_REPRESENTATION_STYLE	SHAPE-REP-STYLE-3	L
SHAPE_REPRESENTATION_STYLE	SHAPE-REP-STYLE-A	L
SHAPE_REPRESENTATION_TYPE	SHAPE-REP-TYPE	L
SHAPE_REPRESENTATION_TYPE	SHAPE-REP-TYPE-2	L
SHEATHING_PERFORATION_DENSITY	SHEATH-PER-DENSITY	N
SHEATHING_PERFORATION_DENSITY_VALUE	SH-PERF-DEN-VALUE	L
SHIP_PRODUCT_ITEM	SPI	N
SHIP_PRODUCT_ITEM_IDENTIFIER	SPI-ID	L
SHIP_PRODUCT_ITEM_VERSION	SPIV	N
SHIP_PRODUCT_ITEM_VERSION_RELATIONSHIP	SPIV-RELATIONSHIP	N
SHIP_PRODUCT_ITEM_VERSION_RELATIONSHIP_CONTEXT	SPIV-RELAT-CONTEXT	L
SHIP_PRODUCT_ITEM_VERSION_RELATIONSHIP_TYPE	SPIV-RELAT-TYPE	L
SOCKET_ASSEMBLY_ASSEMBLY_OCCURRENCE	SOCKET-ASSY-OCC	N
SOUNDNESS_FIT_FUNCTION_TEST_ELEMENT	SOUND-FIT-FUNC-T-E	N

FULL NAME	ABBREVIATED NAME	Type
SPACE_END_OCCURRENCE	SPACE-END-OCCURR	N
SPACE_SPIV_OCCURRENCE	SPACE-SPIV-OCCURR	N
SPECIFIC_ACCESS_DEVICE	SPEC-ACCESS-DEV	N
SPECIFIC_ACCOMMODATION_LADDER_ATTACHMENT_PART	SP-ACC-LDR-ATT-PT	N
SPECIFIC_ACCOMMODATION_LADDER_MAJOR_PART	SP-ACC-LDR-MAJ-PT	N
SPECIFIC_ACCOMMODATION_LADDER_PART	SPEC-ACC-LDR-PART	N
SPECIFIC_ATTACHING_PART	SPEC-ATTACH-PART	N
SPECIFIC_BOTTOM_SHELL_DRAIN_PLUG_TYPE	SPEC-BOT-SHL-DRN	N
SPECIFIC_CEILING_PANEL	SPEC-CEILING-PANEL	N
SPECIFIC_CLIMBERS_SAFETY_RAIL	SPEC-CLIMB-SAF-RL	N
SPECIFIC_DECK_COVERING	SPEC-DECK-COVER	N
SPECIFIC_DECK_RIGGING	SPEC-DECK-RIGGING	N
SPECIFIC_DEVICE	SPECIFIC-DEVICE	N
SPECIFIC_DISCRETE_PART	SPEC-DISCRETE-PART	N
SPECIFIC_DOOR	SPECIFIC-DOOR	N
SPECIFIC_END_SHIP_PRODUCT_ITEM_VERSION	SPEC-END-SPIV	N
SPECIFIC_ENGINEERING_FABRICATED_PART	SPEC-ENG-FAB-PART	N
SPECIFIC_ENGINEERING_PART	SPEC-ENG-PART	N
SPECIFIC_ENGINEERING_PART (EXTERNAL)	EXTERNAL-SP-ENG-PT	E
SPECIFIC_ENGINEERING_PART_DESIGN	SPEC-ENG-PART-DES	N
SPECIFIC_ENGINEERING_PART_IMPLEMENTATION	SPEC-ENG-PART-IMPL	N
SPECIFIC_ENGINEERING_PART_OPENING	SP-ENG-PART-OPEN	N
SPECIFIC_ENGINEERING_PART_OPENING	SPEC-ENG-PART-OPEN	N
SPECIFIC_ENGINEERING_PART_SHAPE_IDENTIFIER	SP-ENG-PART-SHA-ID	L
SPECIFIC_ENGINEERING_PART_SHAPE_REPRESENTATION	SP-ENG-PT-SH-REP	A
SPECIFIC_EQUIPMENT	SPEC-EQUIPMENT	N
SPECIFIC_FALSE_DECK_PANEL	SPEC-F-D-PANEL	N
SPECIFIC_FASTENER	SPEC-FASTENER	N
SPECIFIC_FASTENER	SPECIFIC-FASTENER	N
SPECIFIC_FASTENER_SET	SPEC-FASTENER-SET	N
SPECIFIC_FASTENER_SET_IDENTIFIER	SPEC-FAST-SET-ID	L
SPECIFIC_FLOOR_PLATE	SPEC-FLOOR-PLATE	N
SPECIFIC_FURNISHING	SPEC-FURNISHING	N
SPECIFIC_GRATING	SPECIFIC-GRATING	N
SPECIFIC_HULL_FITTING	SPEC-HULL-FTG	N
SPECIFIC_INCLINED_LADDER	SPEC-INCL-LADDER	N
SPECIFIC_INCLINED_LADDER_SHIELD	SP-INCL-LDR-SHIELD	N
SPECIFIC_INCLINED_LADDER_TREAD	SPEC-INCL-LDR-TRD	N
SPECIFIC_INSULATION_ENVELOPE	SPEC-INSULAT-ENV	N
SPECIFIC_INSULATION_PART	SPEC-INSUL-PART	N
SPECIFIC_INTERFACE_SHIP_PRODUCT_ITEM_VERSION	SPEC-INTERF-SPIV	N
SPECIFIC_LADDER_RUNG	SPEC-LADDER-RUNG	N
SPECIFIC_LIFELINE_PART	SPEC-LIFELINE-PART	N
SPECIFIC_NON_STRUCTURAL_BULKHEAD_PART	SPEC-N-S-PANEL	N
SPECIFIC_OPENING_PURPOSE	SPEC-OPEN-PURPOSE	L
SPECIFIC_OPENING_SHAPE_IDENTIFIER	SP-OPEN-SHAPE-ID	L
SPECIFIC_OPENING_SHAPE_REPRESENTATION	SP-OPEN-SHAPE-REP	A
SPECIFIC_OPENING_SHAPE_REPRESENTATION	SPEC-OPEN-SH-REP	N
SPECIFIC_O&F_END	SPEC-O-F-END	N
SPECIFIC_O&F_END_SHAPE_REPRESENTATION	SP-OF-END-SH-REP	A
SPECIFIC_O&F_END_SHAPE_REPRESENTATION	SPEC-OF-END-SH-REP	N
SPECIFIC_O&F_END_TYPE	SPEC-OF-END-TYPE	L
SPECIFIC_O&F_FASTENER	SPEC-O-F-FASTENER	N
SPECIFIC_O&F_PART	SPEC-O-F-PART	N
SPECIFIC_O&F_SHAPE_REPRESENTATION_IDENTIFIER	SP-OF-END-SH-RE-ID	L
SPECIFIC_PART_ARC_SHAPE_REPRESENTATION	SP-PATH-ARC-SH-REP	N
SPECIFIC_PART_ARC_SHAPE_STYLE	SP-PATH-ARC-SH-STY	L
SPECIFIC_PART_ENVELOPE_IDENTIFIER	SPEC-PART-ENV-ID	L
SPECIFIC_PART_ENVELOPE_SHAPE_REPRESENTATION	SP-PART-ENV-SH-REP	A
SPECIFIC_PART_ENVELOPE_TYPE	SPEC-PART-ENV-TYPE	L
SPECIFIC_PATH_ARC	SPEC-PATH-ARC	N
SPECIFIC_PATH_ARC_IDENTIFIER	SPEC-PATH-ARC-ID	L
SPECIFIC_PATH_ARC_SHAPE_REPRESENTATION_IDENTIFIER	SP-PA-AR-SH-REP-ID	L
SPECIFIC_PATH_ARC_TYPE	SPEC-PATH-ARC-TYPE	L
SPECIFIC_PATH_NODE	SPEC-PATH-NODE	N
SPECIFIC_PATH_NODE_IDENTIFIER	SPEC-PATH-NODE-ID	L
SPECIFIC_PATH_NODE_SHAPE_REPRESENTATION	SP-PATH-NODE-SH-RP	A

FULL NAME	ABBREVIATED NAME	Type
SPECIFIC_PATH_NODE_SHAPE_REPRESENTATION_STYLE	SP-PA-ND-SH-REP-ST	L
SPECIFIC_PORTABLE_LADDER	SPECIFIC-PORT-LDR	N
SPECIFIC_PRODUCT_SHIP_PRODUCT_ITEM_VERSION	SPEC-PRODUCT-SPIV	N
SPECIFIC_PROTECTIVE_COAT	SPEC-PROT-COAT	N
SPECIFIC_RAIL	SPECIFIC-RAIL	N
SPECIFIC_SAFETY_NET_PART	SPEC-SAFE-NET-PART	N
SPECIFIC_SHIP_PRODUCT_ITEM	SPECIFIC-SPI	N
SPECIFIC_SHIP_PRODUCT_ITEM_VERSION	SPECIFIC-SPIV	N
SPECIFIC_SPACE_SPIV	SPEC-SPACE-SPIV	N
SPECIFIC_STANDARD	SPECIF-STANDARD	L
SPECIFIC_STOWAGE_PART	SPEC-STOW-PART	N
SPECIFIC_VERTICAL_LADDER	SPEC-VERT-LADDER	N
SPECIFIC_WINDOW	SPEC-WINDOW	N
SPECIFIC_WINDOW_WIPER	SPEC-WINDOW-WIPER	N
STANCHION_CONNECTION_SYSTEM_OCCURRENCE	STAN-CONN-SYS-OCC	N
STATIC_LOAD_DROP	STAT-LOAD-DROP	N
STATIC_LOAD_DROP_TEST_ELEMENT	STAT-LOAD-DROP-T-E	N
STOWAGE_PART_OCCURRENCE	STOW-PART-OCCURR	N
STRENGTH_AND _SOUNDNESS_TIGHTNESS_TEST_ELEMENT	STRENGTH-TIGHT-T-E	N
STRIPS_OCCURRENCE	STRIPS-OCCUR	N
STRUCTURAL_PART	STRUCTURAL-PART	E
SURFACE_ATTACHMENT_CONFIGURATION	SURF-ATTACH-CONF	A
SURFACE_FINISH	SURFACE-FINISH	N
SURFACE_FINISH_LOCATION	SURF-FIN-LOCATION	L
SURFACE_PREPARATION	SURFACE-PREP	L
SYSTEM_OPERATING_CONDITION	SYSTEM-OPER-COND	N
SYSTEM_OPERATING_CONDITION_IDENTIFIER	SYS-OPER-COND-ID	L
TENDING_LINE_OCCURRENCE	TENDING-LINE-OCC	N
TEST_MEMO_NUMBER	TEST-MEMO-NUMBER	L
TEST_MEMO_REVISION	TEST-MEMO-REV	L
TEST_MEMO_TITLE	TEST-MEMO-TITLE	L
TEST_TYPE	TEST-TYPE	L
THERMAL_COEFFICIENT	THERM-COEFF	L
TOTAL_PART_INSULATION_THICKNESS	TOT-PT-INSUL-THK	N
TRANSFER_EVENT	TRANS_EVENT	N
TRANSFER_OF_SPIV	TRANSFER_OF_SPIV	L
TRANSPORT_DOLLY_OCCURRENCE	TRANSP-DOLLY-OCC	N
USER_DEFINED_COLLECTION_SHIP_PRODUCT_ITEM	USER-DEF-COLL-SPI	N
USER_DEFINED_COLLECTION_SHIP_PRODUCT_ITEM_VERSION	USER-DEF-COLL-SPIV	N
VECTOR_WITH_MAGNITUDE	VECTOR-W-MAGNITUDE	A
VERSION	VERSION	L
VERTICAL_EXTENT	VERTICAL-EXTENT	E
VERTICAL_LADDER_CLIP_OCCURRENCE	VERT-LDR-CLIP-OCC	N
VERTICAL_LADDER_OCCURRENCE	VERT-LADDER-OCCUR	N
VERTICAL_LADDER_RUNG_OCCURRENCE	VERT-LDR-RUNG-OCC	N
VERTICAL_LADDER_RUNG_QUANTITY	VERT-LDR-RUNG-QTY	L
VERTEX	VERTEX	N
VIBRATION_FREQUENCY	VIB-FREQUENCY	N
VIBRATION_FREQUENCY_VALUE	VIB-FREQ-VALUE	L
VIBRATION_LENGTH	VIBRATION-LENGTH	N
VIBRATION_LENGTH_VALUE	VIB-LENGTH-VALUE	L
WEIGHT_LINE_OCCURRENCE	WEIGHT-LINE-OCC	N
WEIGHT_CONDITION	WEIGHT-CONDITION	N
WEIGHT_CONTEXT	WEIGHT-CONTEXT	L
WEIGHT_VALUE	WEIGHT-V	N
WEIGHT_VALUE	WEIGHT-VAL	L
WINDOW_OCCURRENCE	WINDOW-OCCURR	N
ZONE_OCCURRENCE	ZONE-OCCURR	

Annex C

(Normative)

Implementation method specific requirements

This section will be developed in future versions of the AP.

Annex D

(Normative)

Protocol Implementation Conformance Statement proforma

This section will be developed in future versions of the AP.

Annex E

(Informative)

Application Activity Model

These figures contain models of activities in the "IDEFO" format wherein each activity is represented as a box having Inputs, Outputs, Controls and Mechanisms used in performing the activity.

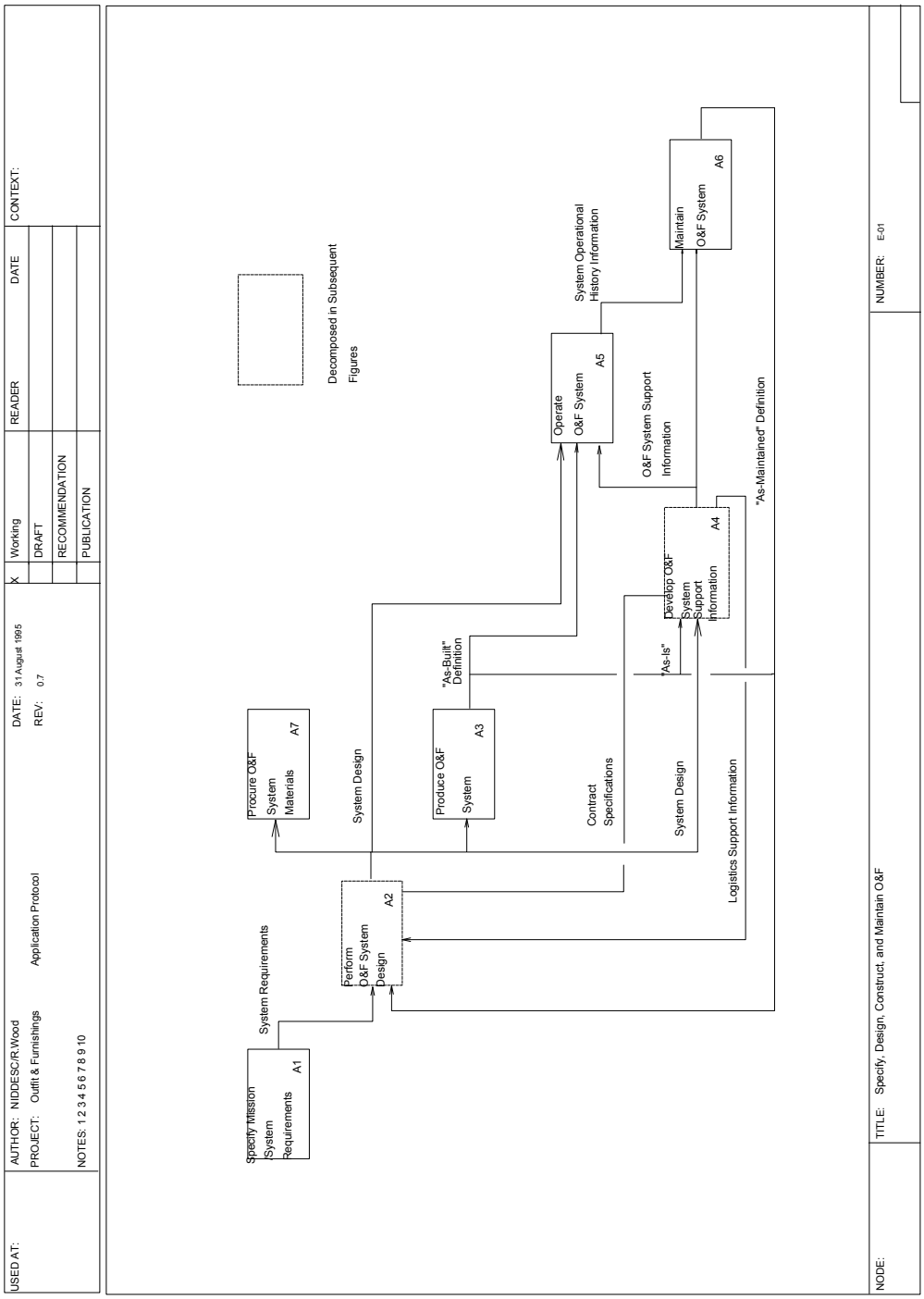

Figure E. 1 Specify, Design, Construct, and Maintain O&F

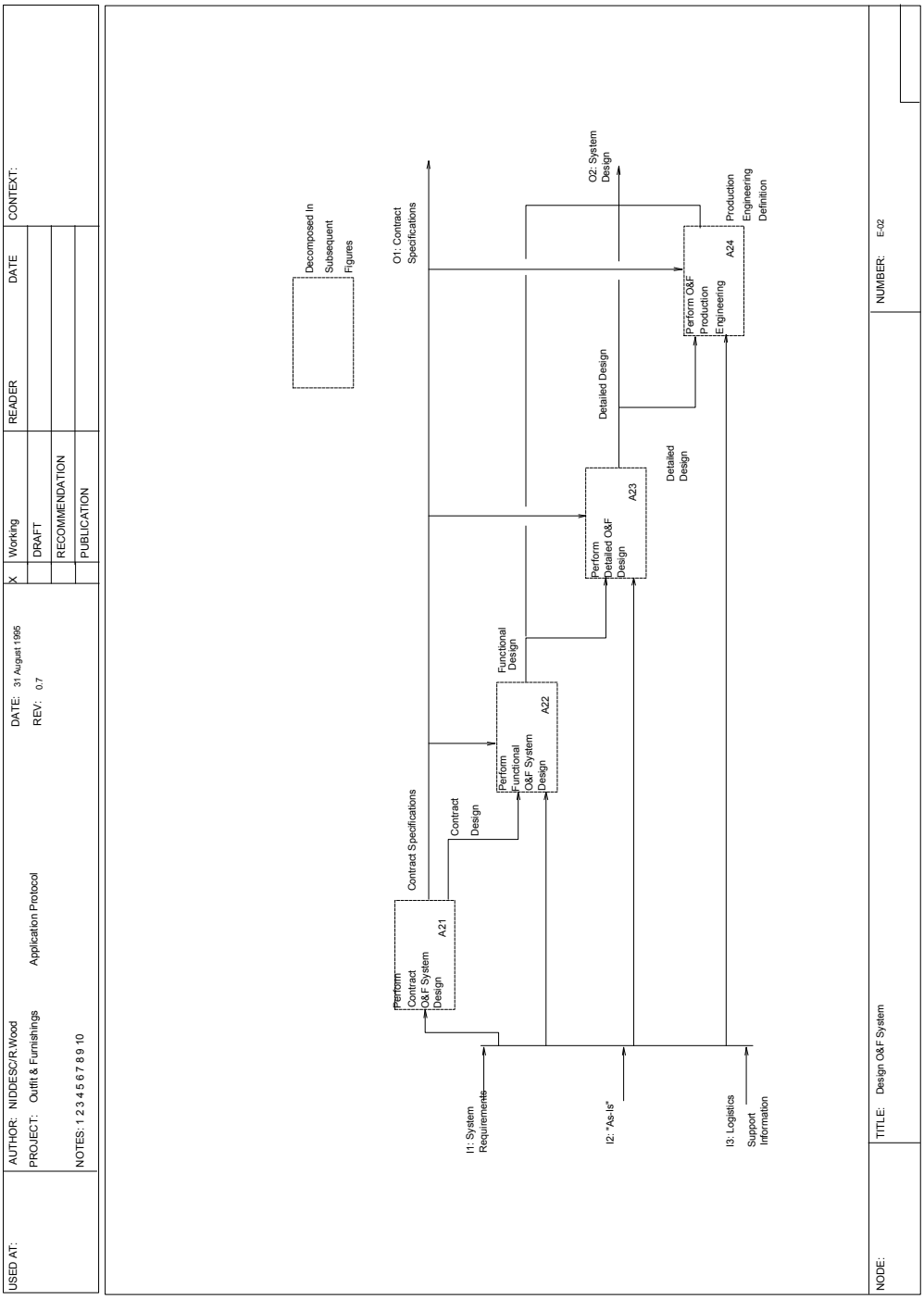

Figure E. 2 Design O&F System

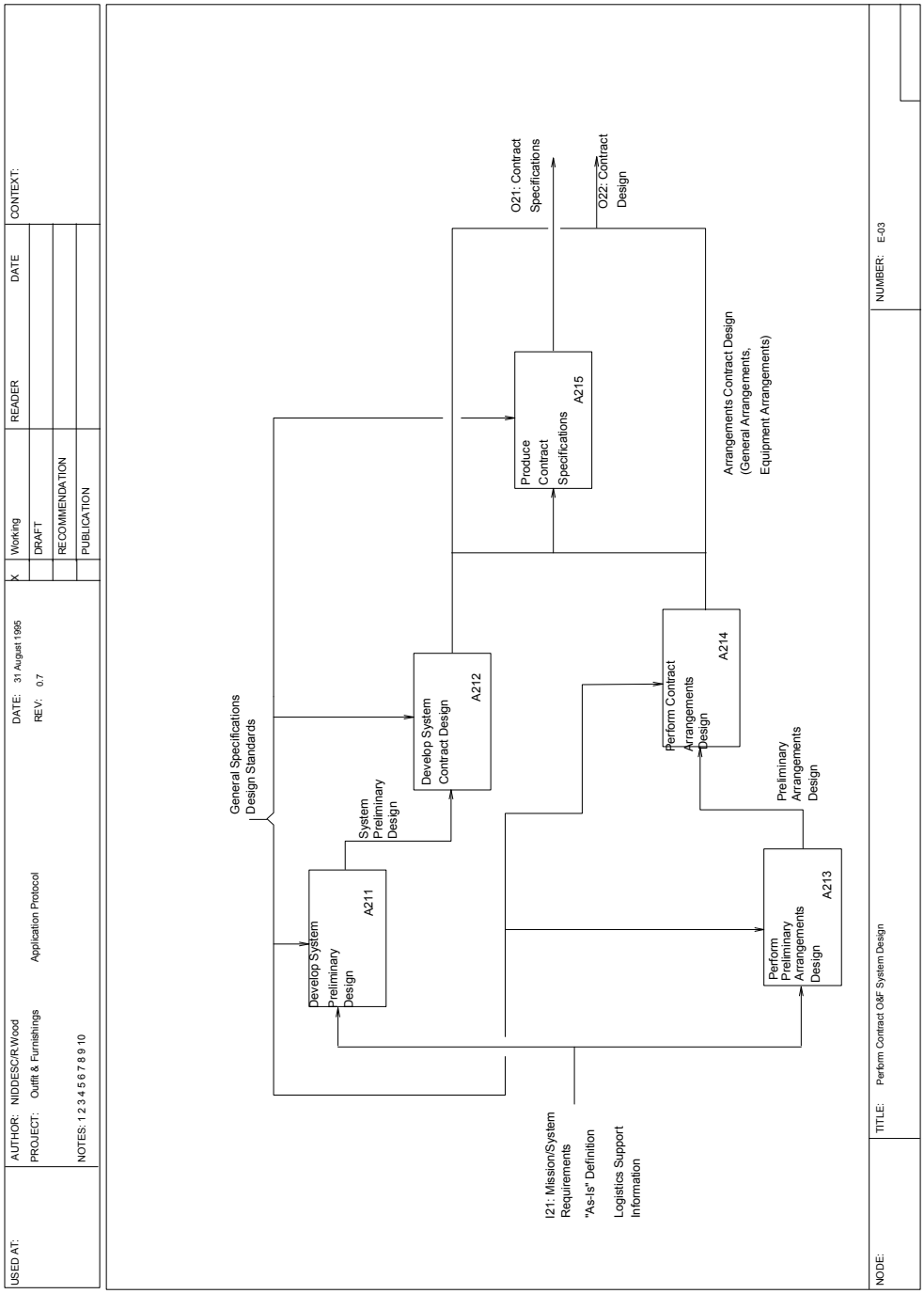

Figure E. 3 Perform Contract O&F System Design

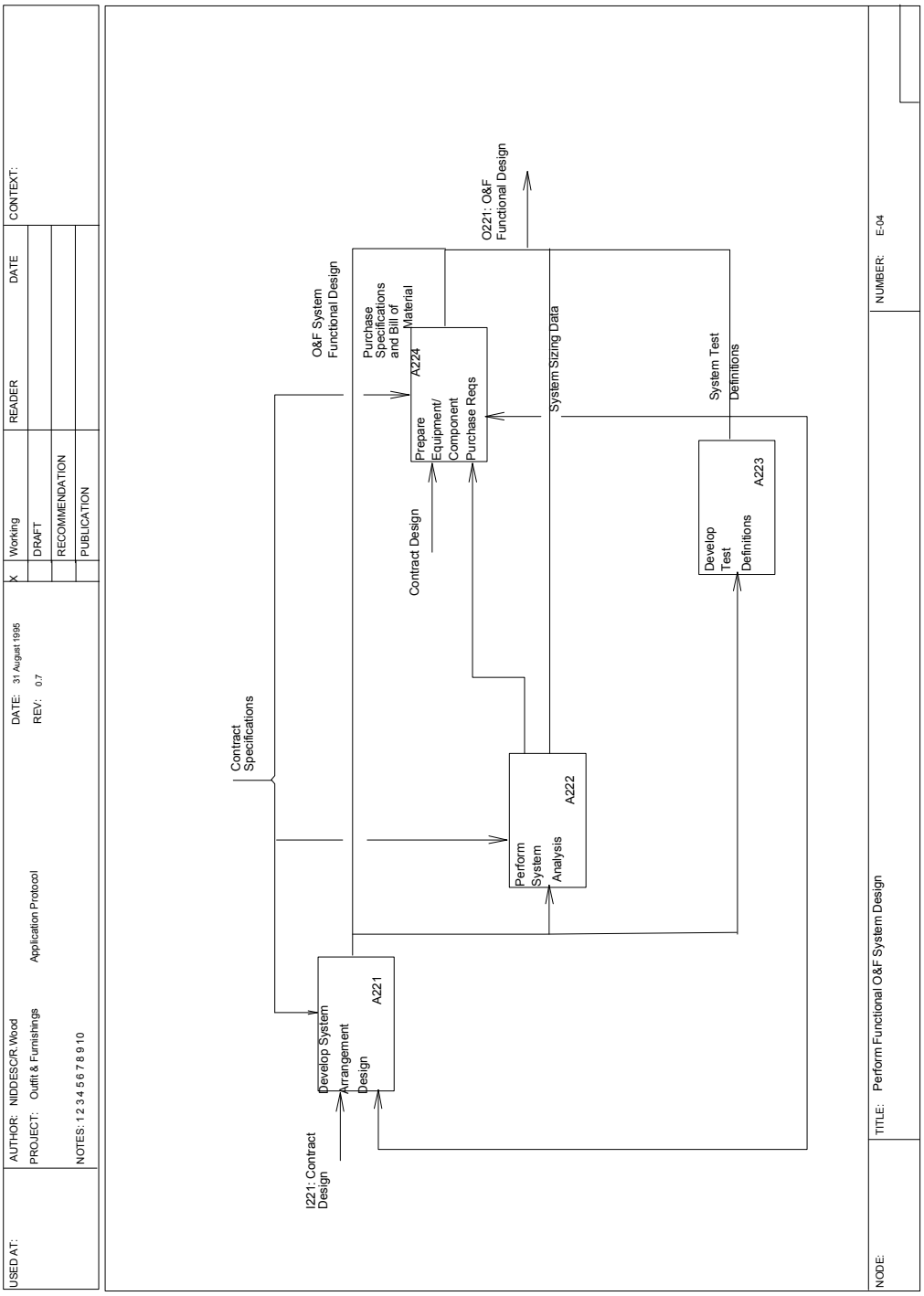

Figure E. 4 Perform Functional O&F System Design

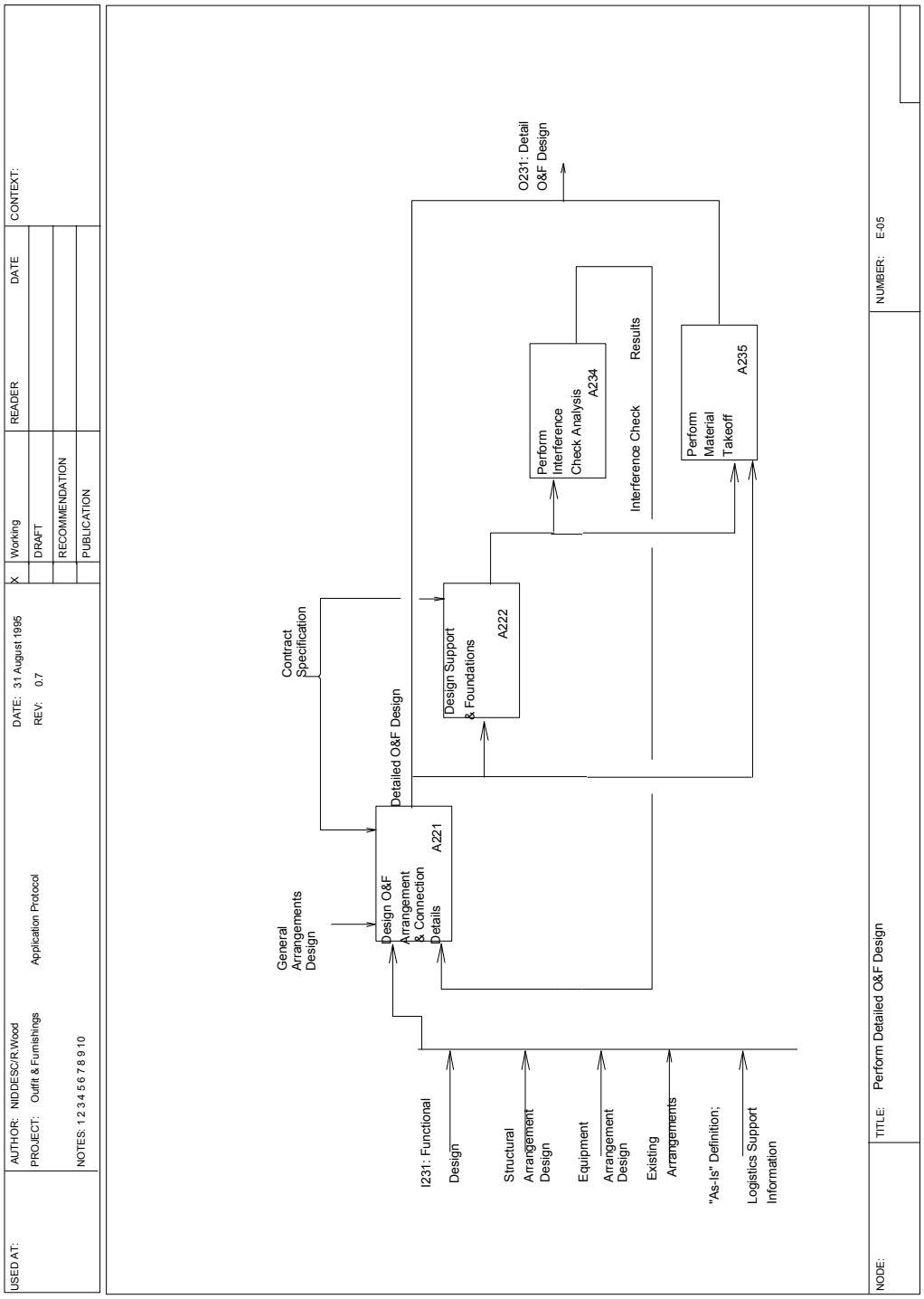

Figure E. 5 Perform Detailed O&F Design

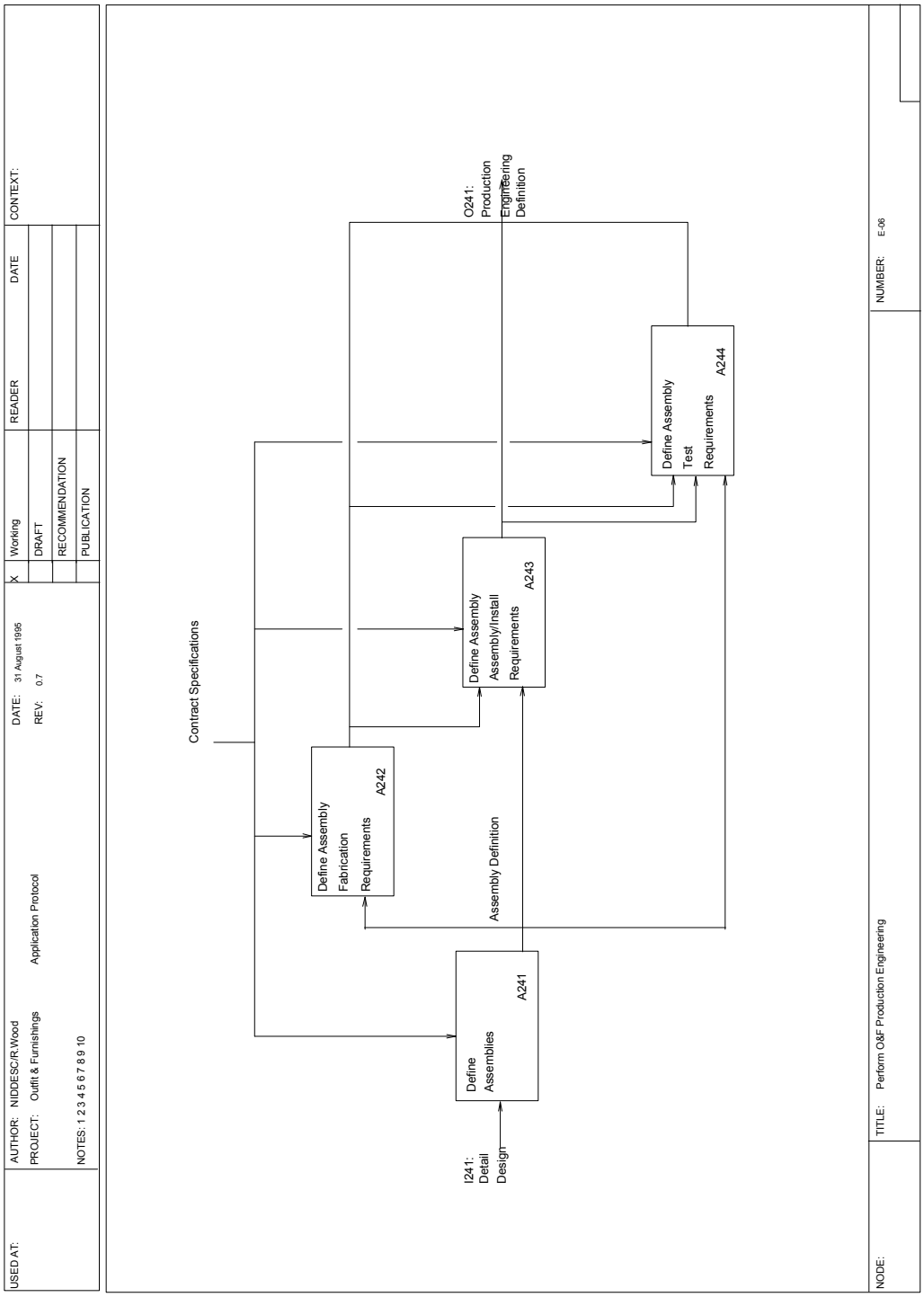

Figure E. 6 Perform O&F Production Engineering

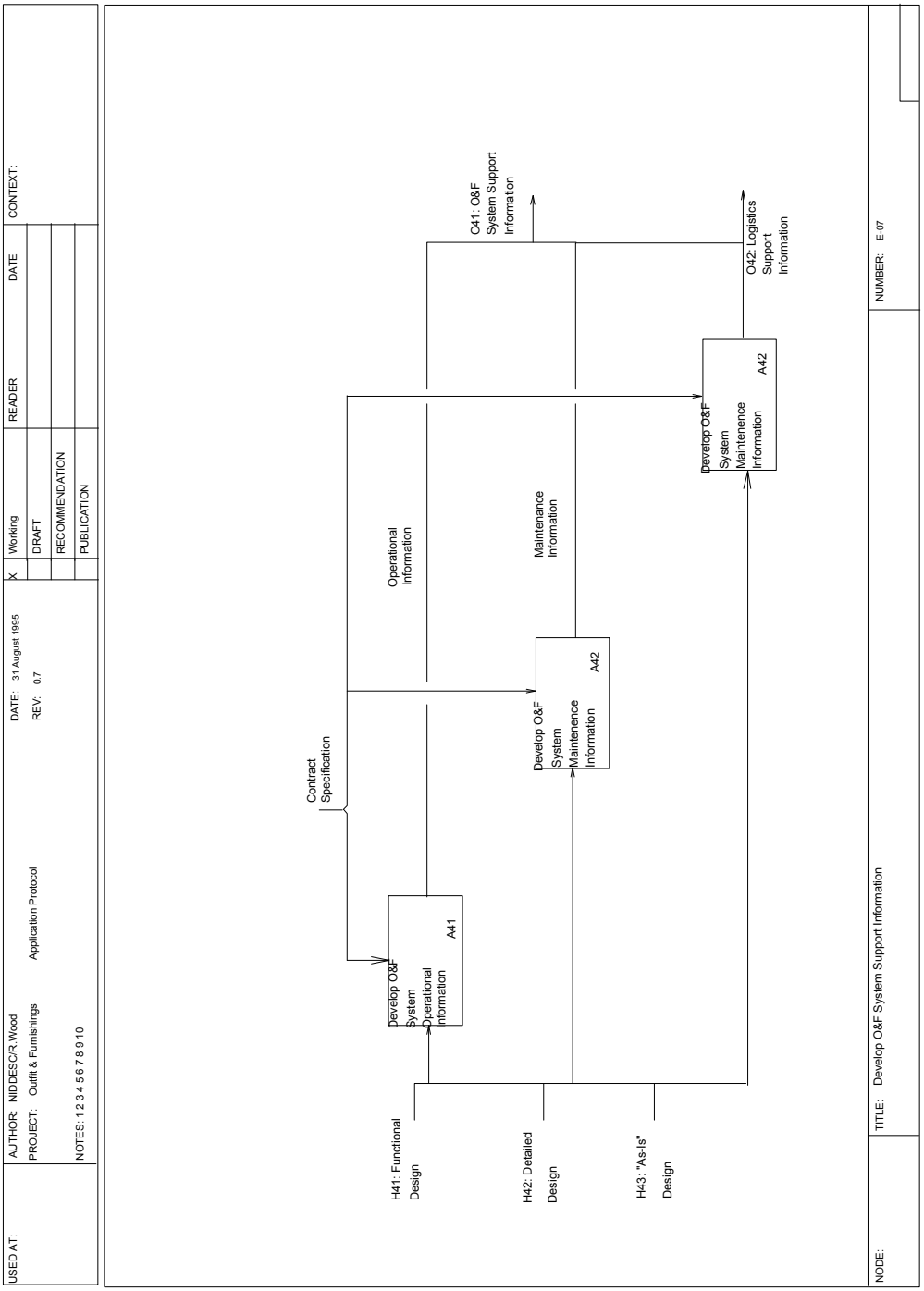

Figure E. 7 Develop O&F System Support Information

Annex F

(Informative)

Application Reference Model

The Application Reference Model for O&F has three levels of information. The highest level models define basic product information which is true across all Ship Product Items. The reader must also refer to [2] and [3] to develop a full understanding of the external library and configuration management functionality used by this AP at this top level. The next lower level models describe basic product information for all O&F Systems. The lowest level models describe O&F specific information. In the context of these higher level models, these three levels of model are described in sections 1 through 3 in this annex respectively.

F.1 Ship Product Item Reference Models

The reference models in this section provide the following utility functionality:

- Top Level Subtypes (Figure F-01)
- Item Identification (Figure F-02)
- Ship Product Item Product Structure Definitions (Figure F-02)

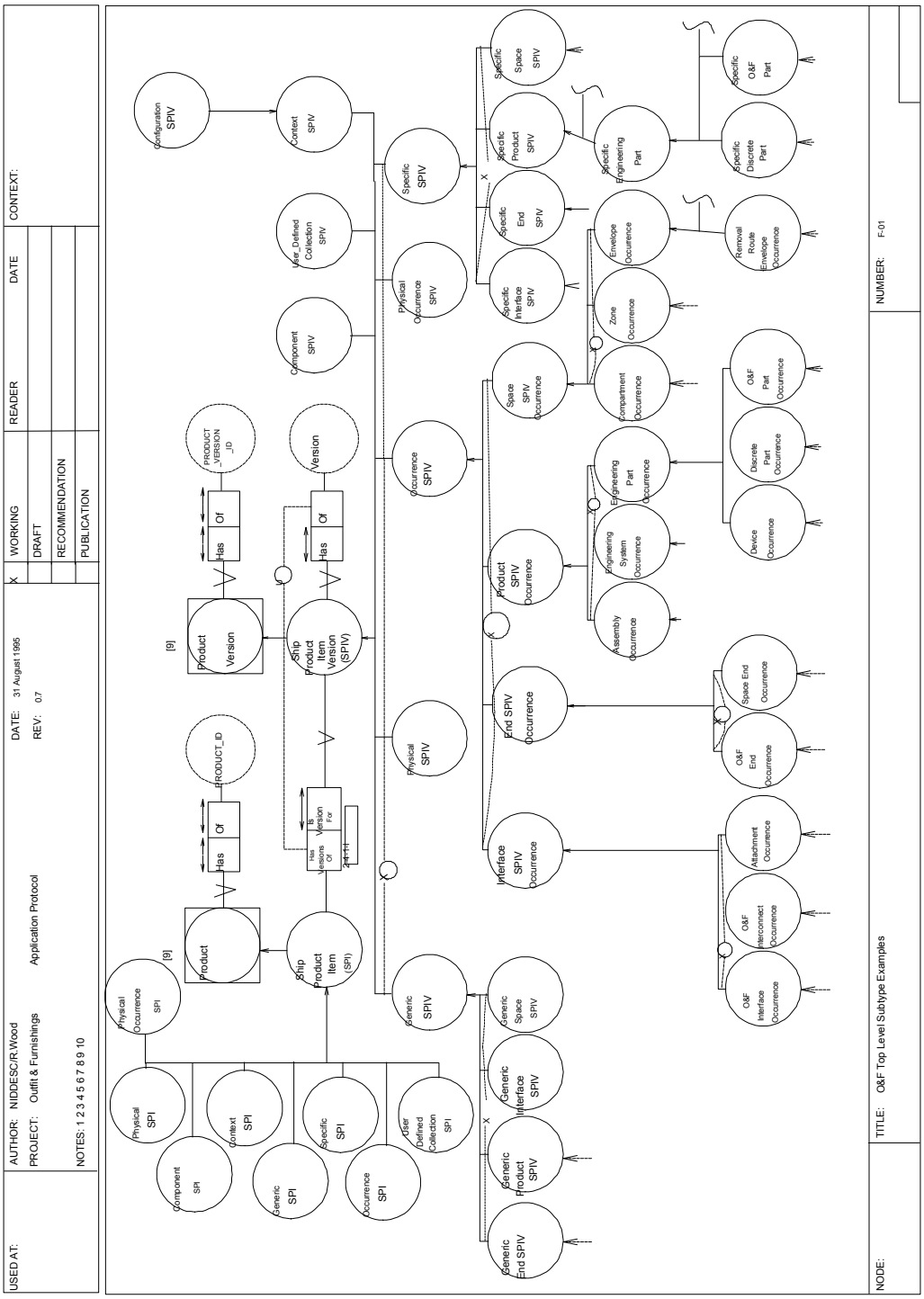

Figure F. 1 O&F Top Level Subtype Examples

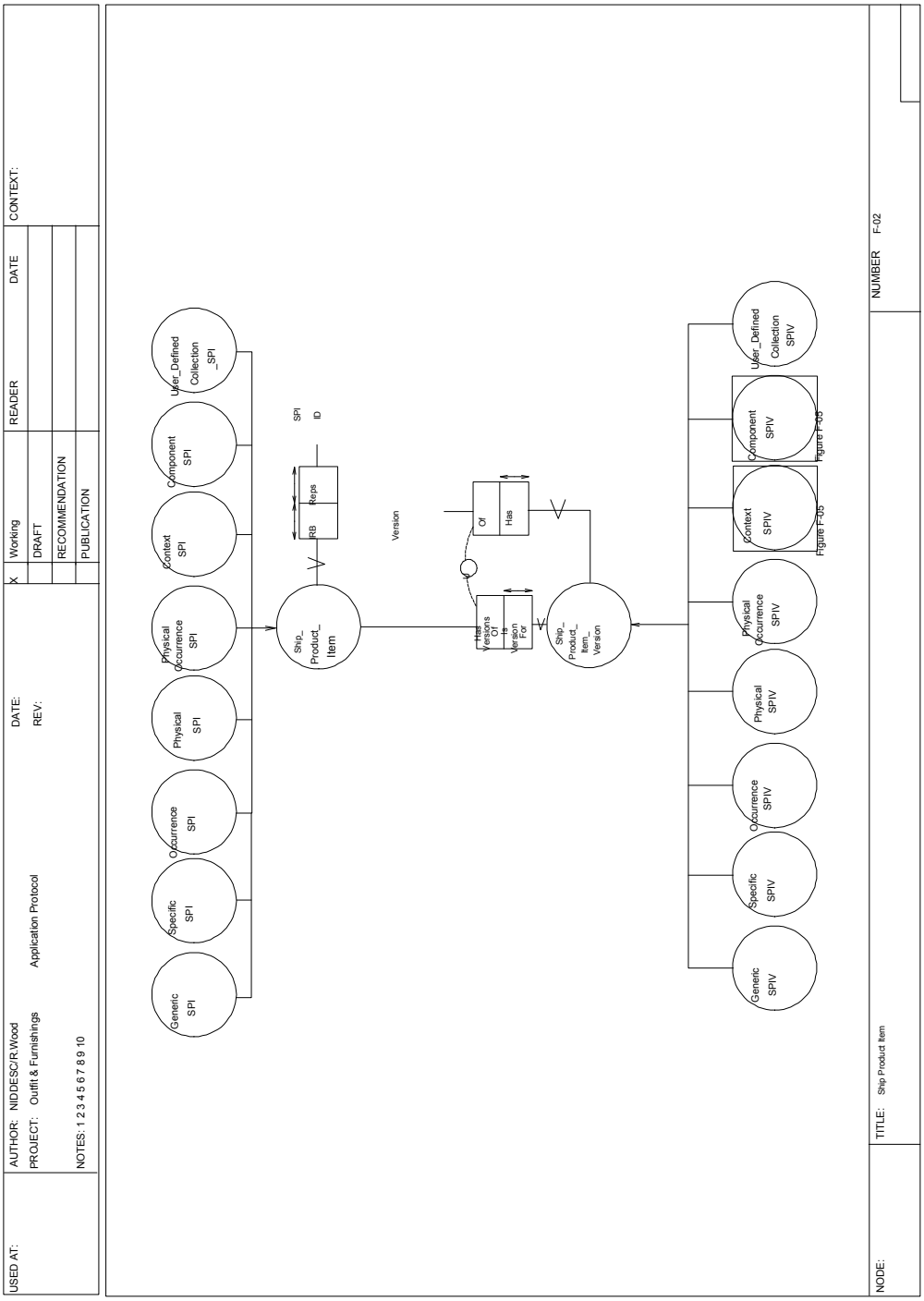

Figure F. 2 Ship Product Item

F.1.1 Ship Product Item Configuration Management

F.1.1.1 Purpose

The NIDDESC Configuration Management Model provides the information structures necessary to exchange ship configuration status accounting data between enterprises. This includes the control of change to the thousands of Ship Product Items and their interrelationships contained in a ship's product model. The model supports the entire ship life cycle including design, construction, operation and maintenance. The model provides information structures for product versioning, hull applicability, product approval, product promotion, and product structuring and is intended as a common template for NIDDESC Application Protocols.

F.1.1.2 Scope

The scope of the NIDDESC Configuration Management Model is the exchange of configuration status accounting data as part of the ship product model data exchange. The scope includes the entire ship life cycle. The scope does not include the sharing of configuration status accounting data in a shared data base environment. Data exchange in this context refers to the use of a neutral data format and translators to transfer data between dissimilar CAD systems. Data sharing in this context refers to the use of a common database that dissimilar CAD systems can access directly. This eliminates the need for the model to support data access control, change notification, or partial promotion. Access control includes authorization for read or write access to data. Change notification includes automatic notification of related data owners that significant modifications have occurred. Partial promotion includes the need to promote a portion of an item while allowing other portions to continue to be modified.

F.1.1.3 Fundamental Concepts

a) Product Versioning

The basic building block of the NIDDESC Configuration Management Model is the Ship Product Item (SPI). SPI is an abstract entity that is further specified through the definition of its subtypes in each of the NIDDESC Application Protocol (AP). An SPI is a place holder for any entity in an AP whose configuration needs to be managed. Each SPI has one or more versions or Ship Product Item Versions (SPIV).

An SPIV is a unique variation of an SPI identified by the concatenation of the SPI's identifier and a specific Version. For example, a drawing is an SPI and every drawing revision is an SPIV. A new version of an SPI is created as a result of a need to modify an existing version of the SPI. However, not every modification requires a new version to be created. The determination of when to create a new version is governed by the rules of section 1.1.6 of this annex.

The SPIV is also used to support the exchange of design alternatives. For example, if version A exists of an SPI and two alternative designs for the same SPI are started, then one alternative would be designated as version B and the other version C. This allows the alternatives to be versioned separately. The parentage of the versions is explicitly maintained by the entity Creation, Modification, Deletion Event rather than implicitly by sequential versions.

b) Product Structuring

Product structure in the context of this model goes beyond the traditional concept of assemblies of parts to form a final product. It is used in this model to identify relationships between SPIVs for assembly definition, system definition, zone or space definition, or any other grouping of purpose.

A product structure, in this model, consists of a Context SPIV and one or more Component SPIVs. Each Component SPIV is related to the Context SPIV through the role "Is_Component_In/Is_Context_For". This role is itself an entity called SPIV Relationship. For example, an sub-assembly (A1) consists of several parts. The sub-assembly (A1) is a Context SPIV and each part is a Component SPIV. The relationship between each part and the sub-assembly is a SPIV Relationship. The sub-assembly (A1) may also be a component in a higher level assembly. In this situation the sub-assembly is a Component SPIV and the assembly is a Context SPIV. Therefore, an SPIV can be both a Component SPIV and a Context SPIV. A part that is a Component SPIV in sub-assembly (A1) can also be a Component SPIV in another Context SPIV such as a system. Therefore, an SPIV can be a Component SPIV in more than one Context SPIV.

c) Significant Change

In a product structure the SPIV Relationship between the Context SPIV and each of its Component SPIVs has an SPIV Relationship Context. This entity defines what is significant about the Context SPIV and Component SPIV in their relationship. For example, a valve (V1) is a component in two product structures, system (SYS1) and space (SP1). In the relationship between the valve and the space only the shape, position and orientation aspects of the valve are significant. That is, the shape, position and orientation of the valve are important to the space and therefore can not change without consequence to the space. The functional aspects of the valve, such as maximum operating pressure, are not significant to the space but they are to the system. Therefore, if the maximum operating pressure changes it is of no consequence to the space but it may have dramatic consequences to the system.

The concept of significant change is very important in a shared database environment where automatic change notification and partial promotion will occur. It is of less importance in a transfer where neither of these occur. In a transfer situation the SPIV Relationship Context provides the sender of the exchange file a place to identify what was significant about the Component SPIV and Context SPIV in their relationship and allows the receiver of the exchange to determine the impact of future changes.

d) Product Structure and Version Propagation

When a change occurs, that causes a new version of a component in a product structure, the decision to create a new Context SPIV is one that must be made by the creator of the change. This decision is based on the significance of the change to the higher level entity. If this was not true than any version change at the lowest level would cause the highest level version to change. For example, a bolt is a component in a pre-assembly which is a component in a assembly which is a component in an module which is a component in a ship. If the version of the bolt changes than the version of ship would also change. This is clearly impractical. Theoretically the ship is different but the change to the bolt is insignificant in the context of the entire ship and therefore the propagation of the version change would stop before it got to the ship level.

The above paragraph addresses version propagation from the bottom up. The same is true, however, for version propagation from the top down. For example, if the operating pressure of a system changes, this change is significant to the components of the system and may cause new versions of the components to be created.

When a new SPIV is created every SPIV Relationship that the old SPIV is a "context for" or a "component of" must be evaluated to determine if the relationship should be copied to the new SPIV. The decision to copy the relationship is based on the significance of the change, the promotion level of the opposite SPIV and the hull applicability of both the opposite and new SPIV. Opposite SPIV here refers to the SPIV on the other side of the SPIV relationship from the old SPIV.

e) Product Approval

Another basic building block of the NIDDESC Configuration Management model is the entity Configuration SPIV. A Configuration SPIV is a type of product structure that groups SPIVs together for the purpose of approval. Without it each SPIV in a product structure would have to be approved individually. It employs a special type of SPIV Relationship called an Approval Relationship. For example, in many enterprises today a drawing revision is used as the approval mechanism for the portion of the product that it represents. A drawing revision that represents 20 structural parts, all of which are SPIVs, is approved or rejected as a whole rather than each individual part being approved or rejected individually. The drawing revision, in this example, is a Configuration SPIV that is the approval context for each structural parts. In the above example the Configuration SPIV was a drawing, but a Configuration SPIV does not have to be a document. It can be any product structure such as an assembly, a system, or a space.

A Configuration SPIV has an Approval Relationship with each SPIV that it is the context for. The Approval Relationship carries an attribute that identifies the approval status of the SPIV, "unapproved", "approved", or "rejected" (see Section 4.1.1.6), in the context of the Configuration SPIV and the date and time that this status was achieved. Configuration SPIVs will be project specific and therefore should not be defined in an Application Protocol.

In the traditional drawing review cycle several signatures (i.e. approvals), each from a different perspective may be required before a drawing can be issued. For example, an arrangement drawing may require piping system's owner, HVAC system's owner, equipment owner's and the foundation owners' signatures before it may be issued. The NIDDESC Configuration Model is designed to support shared approval authority i.e. ownership of the SPIVs.

For example, a pipe may have shared ownership. The functional aspect of the pipe is owned by the system product structure, its shape and orientation aspects may be owned by the space product structure, and its assembly aspects may be owned by the assembly product structure. Therefore, a Component SPIV may be a component in more than one Approval Relationship. In this example, the system, zone, and assembly are all separate Configuration SPIVs with an Approval Relationship with the pipe. A Configuration SPIV has an Approval Relationship with each SPIV that it has context for. The Approval Relationship has one or more Approval Events. The Approval Event carries an attribute that identifies the approval status of the SPIV, "unapproved", "approved", "rejected", or "reserved" (see section 1.1.6 of this annex), in the context of the Configuration SPIV and the date and time that this status was achieved. The collection of all the Approval Events of an Approval Relationship is the approval history of the relationship.

f) Product Promotion

Product promotion works hand-in-hand with product approval. It establishes three basic levels of approval for an SPIV and identifies the approval level to the receiver of the product data. The three level of approval are defined in F.1.1.6.b.

An analogy for product promotion is found in the drawing development process. While a drawing is being created changes are occurring relatively quickly and anyone that needs information from the drawing knows that the data is subject to change. This is the "working" level of promotion. Once the drawing is completed it must be checked and signed by one or more persons in authority. While it is going through this approval process it is subject to change, but if it is significantly changed it must start the approval process again, i.e. its Approval Flags must all be reset. This is the "preliminary" level of promotion. Once the drawing has been checked and signed by all the necessary parties it is considered issued and anyone needing information from the drawing knows that the data will not be changed until the next revision of the drawing. This is the "issued" level of promotion.

g) Hull Applicability

In the marine industry the concept of hull applicability is extremely important to configuration management. The hull represents a single ship. Hull applicability defines the relationship between an SPIV and one or more hulls. Using hull applicability the receiver of the product data can unambiguously determine which version of each SPI is used for each hull. Also, the receiver can unambiguously determine on which hull or hulls an individual SPIV is used or designed to be used. Conceptually a hull is just another Configuration SPIV, however because of the complexity of an entire hull the concept of versioning the hull is of little use. A hull is instead today defined by a list of drawing/revisions which, in the context of the NIDDESC Configuration Model, are Configuration SPIVs.

In this model, hull applicability is accomplished by the entity Hull and its roles to Occurrence SPIVs and Physical Occurrence SPIVs. An Occurrence SPIV may be applicable to one or more Hulls but a Physical Occurrence SPIV may be applicable to one and only one Hull.

h) Activity Diagram

Figure 1 of reference [2] is an IDEF0 activity diagram that represents the activities that this model is intended to support. Figures 2, 3 and 4 of reference [2] are traditional flow diagrams that further describe the rules that govern the change control process.

F.1.1.4 Fundamental Requirements

The minimum functional requirements that the model is intended to fulfill are described in the following sections.

a) Configuration Status Accounting

Provide a template for configuration status accounting for the NIDDESC Application Protocols. This includes changes during the entire life cycle for both formal changes and design iteration changes.

b) Product Versioning

Provide a template for product versioning to support change management, multiple hulls and multiple design versions.

Required Data for each Ship Product Item
Identification
Version
Creation, Modification, Deletion Description and Date/Time
Change Identifier
SPIV Relationships and Relationship Context
Hull Applicability
Promotion Level
Transfer Status

c) Hull Applicability

Provide a template for hull applicability for the NIDDESC Application Protocols.
Required Data for each Ship Product Item
Identification
Version
Hull Identifier
d) Product Approval

Provide a template for product approval and product reservation for the NIDDESC Application Protocols.

Required Data for each Ship Product Item
Identification
Version
Approval Relationships and Relationship Context
Approval Flag and Date/Time
Change Identifier
Creation, Modification, Deletion Description and Date/Time

e) Product Promotion

Provide a template for product promotion for the NIDDESC Application Protocols.

Required Data for each Ship Product Item
Identification
Version
Creation, Modification, Deletion Description and Date/Time
Promotion Level and Date/Time
SPIV Relationships and Relationship Context
Approval Flag and Date/Time
Change Identifier
Change Element Identifier

f) Product Structuring

Provide a template for product structuring for the NIDDESC Application Protocols. The product structuring must support assembly views, system views, and space arrangement views.

Required Data for each Ship Product Item
Identification
Version
SPIV Relationships

F.1.1.5 Business Rules

a) Versioning of Ship Product Item Versions

As discussed in section 1.1.3 of this annex, the decision to create a new version, and what to do with the SPIV Relationships, in response to a change is the responsibility of the creator/sender of the product data. There are a few exceptions to this rule. These decisions are based on the following rules:

New SPIV Rules:

- If an SPIV is at the promotion level of "issued", any significant change requires a new version to be created.
- If an SPIV is at the promotion level of "preliminary", a new version is optional. To modify a "preliminary" SPIV it must first be demoted to "working".
- If an SPIV has been transferred, a new version must be created if it has been significantly changed since the transfer, regardless of the SPIV's promotion level. In effect, the SPIV must be treated as if it was "issued" anytime it is transferred between enterprises.

SPIV Relationship Rules:

- If the change is not significant in the SPIV Relationship and the hull applicability is consistent, then the relationship should be copied between the new SPIV and opposite SPIV. Any Approval Events should be copied unchanged.
- If the change is not significant in the SPIV Relationship and the hull applicability is not consistent, then the relationship should not be copied between the new SPIV and the opposite SPIV. The new version of the opposite SPIV may be necessary.
- If the change is significant in the SPIV Relationship and the opposite SPIV is at the "preliminary" promotion level, then a new version of the opposite SPIV is optional. If a new version is not desired, the opposite SPIV must be demoted to "working". The SPIV Relationship should be copied between the new SPIV and the opposite SPIV. Any Approval Events should not be copied.
- If the change is significant in the SPIV Relationship and the Opposite SPIV is at the "working" promotion level, then a new version of the opposite SPIV is optional. The SPIV Relationship should be copied between the new SPIV and the opposite SPIV. Any Approval Events should not be copied.

b) Promotion Rules for Ship Product Item Versions

The promotion of SPIV is accomplished by raising the Promotion Level to the next highest level. The Promotion Level is an indicator of where a specific SPIV is in the approval process. The following are the allowed Promotion Levels:

- Working - Indicates that the item is still under development and therefore subject to significant change. Only "working" SPIVs may be significantly changed.

- Preliminary - Indicates that the item has started the approval process. "Preliminary" SPIVs can not be significantly changed. However, a "working" SPIV can be repromoted and replace a "preliminary" SPIV. If this occurs all Approval Flags must be reset to "unapproved".

- Issued - Indicates that the item has completed the approval process. Once an SPIV has reached the "issued" promotion level, it can never be deleted or significantly changed.

The following rules apply to promotion:

- A Context SPIV may not be promoted until all the SPIVs that it is the context for have been promoted to at least the promotion level requested for the Context SPIV or had their Reservation Flag set to "reserved". (See Figure 5 in [2]).

  The Reservation Flag is used to allow a Context SPIV to be promoted even if its Component SPIVs are not. It allows for exception to the rule stated above.

An example of when this is necessary is when a system is ready to be issued except for a small portion which is waiting for official customer approval. Ideally the system should not be issued, but in the real world the system could be issued with a reservation of the parts in question. This allows the manufacturing of the system to get started while waiting for official notification of the small portion.

- A Component SPIV may not be promoted to "issue" until all Approval Relationships that it is a component in have Approval Flags set to "approved" and there are no "reserved" Reservation Flags set to "Approved and there are no "reserved" Reservation Flags. (see figure 5 in [2]). The "reserved" Reservation Flag has the same affect on the promotion of a component "SPIV" in an Approval Relationship as the "unapproved flag". That is it may not be promoted to "issued" until all Reservation Flags are removed and its Approval Flag set to "approved".

- Once an SPIV has been promoted to "preliminary" or "issued" it can not be significantly changed. If a significant change to a "preliminary" SPIV is required, it must be demoted to "working", be changed, and then repromoted to "preliminary". This action must cause all its "approved" Approval Flags to be reset to "unapproved".

- If a Configuration SPIV is "issued" with a reservation against one of its Component SPIVs, the Approval Flag on the Component SPIV must remain "unapproved" until the Reservation Flag is set to "unreserved". If the component SPIV is unacceptable

in the context of the Configuration SPIV, this constitutes a significant change to the Configuration SPIV. Therefore, a new version of the Configuration SPIV must be created and the old one remains with a reservation against the Component SPIV.

c) Approval rules for Ship Product Item Versions

The approval of a Component SPIV, within the context of a Configuration SPIV (see section F.1.1.3.e) is indicated by setting the Approval Flag of the latest Approval Event of an Approval Relationship to "approved". The Approval Flag works hand in hand with SPIV promotion (see sections F.1.1.3.f and F.1.1.6.b. and is only used between the "preliminary" and "issued" level of promotion. A single Component SPIV may have an Approval Relationship with many Configuration SPIVs. Therefore, it may not be promoted to "issued" until all the Approval Relationships that it is a component in, have Approval Flags set to "approved" (see figures 4, 5, and 6 in [2]). The allowed Approval Flag values are:

— Unapproved - This indicates that the Component SPIV has not been review or is in the process of being reviewed for approval in the context of the Configuration SPIV.

— Approved - This indicates that the Component SPIV has been approved in the context of the Configuration SPIV.

— Rejected - This indicates that the Component SPIV has been rejected in the context of the Configuration SPIV.

The following rule applies to approval:

— A Component SPIV may not be promoted to "issued" until all the Approval Relationships that it is a component in have Approval Flags set to "approved" (See Figure 4 in [2]).

— A Component SPIV may not be promoted to "issued" until all the Reservation Flags against the Component SPIV have been set to "unreserved".

d) Deletion Rules for Ship Product Item Versions

The deletion of an SPIV is always considered a significant change. The following rules apply to the deletion of an SPIV:

— A "working" or "preliminary" SPIV can simply be erased, unless it has been transferred.

— An "issued" SPIV or one that has been transferred must not be erased. A new version must be created and then the new version flagged as deleted.

e) Deletion Rules for Ship Product Versions

Only "preliminary" SPIVs may be demoted. Once an SPIV is "issued" it may not be demoted to "preliminary" or "working".

The following rules apply to the demotion of a "preliminary" SPIV:

- If a "preliminary" SPIV needs to be demoted, a new Promotion Event should be added to the SPIV with a Promotion Level of "working" and the current Date/Time.

- Every Approval Relationship that the demoted SPIV is a "component in" must have its Approval Flag set to "unapproved".

F.1.1.6 NIAM Diagrams

The reference models in this section describe product information which defines the configuration system and library parts reference models used by O&F systems.

- Promotion and Change Incorporation (Figure F-03)
- Change and Change Alternatives (Figure F-04)
- Configuration Approval (Figure F-05)
- Hull Applicability (Figure F-06)
- Definition of the structure of external catalog references (Figure F-07)

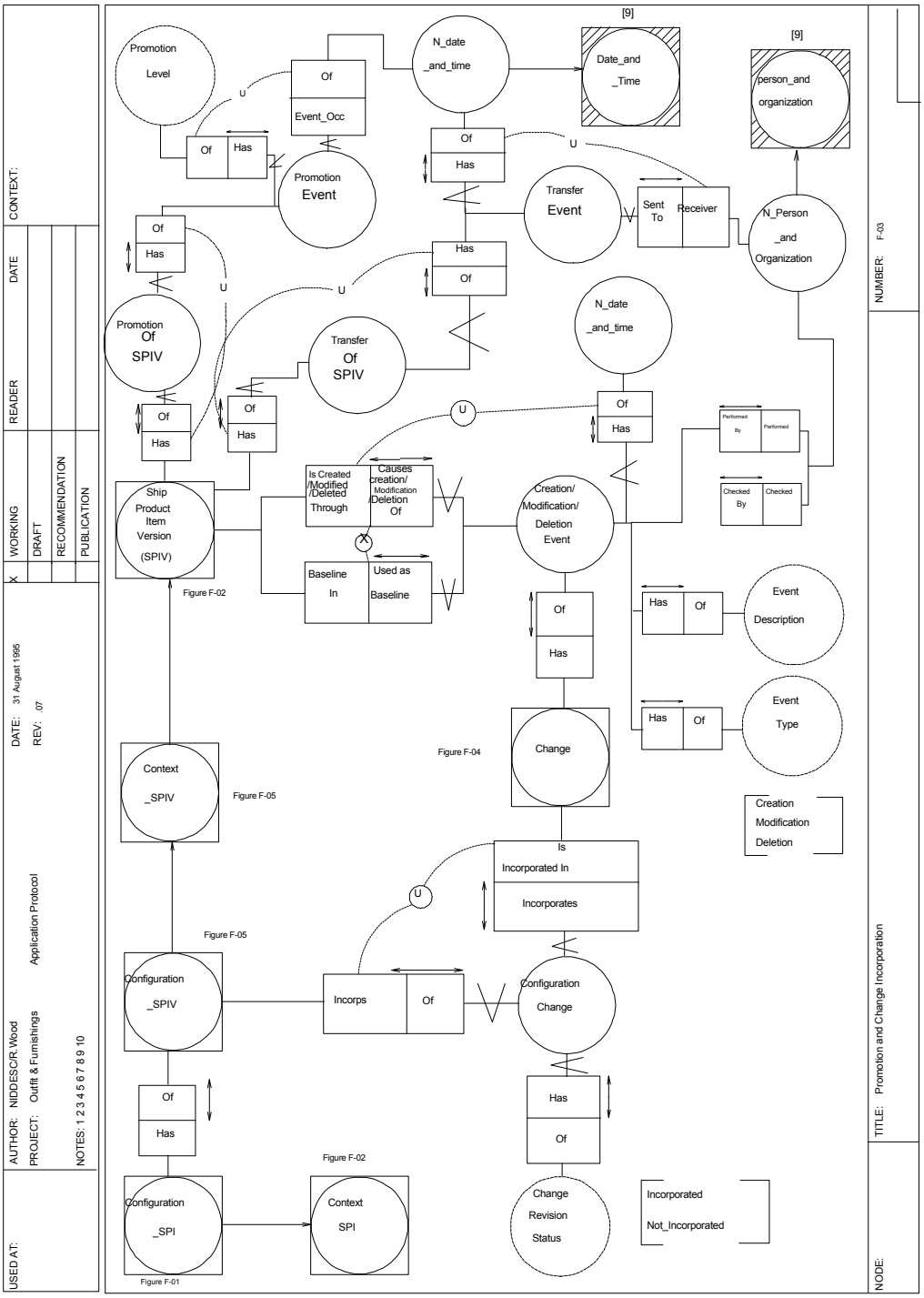

Figure F. 3 Promotion and Change Incorporation

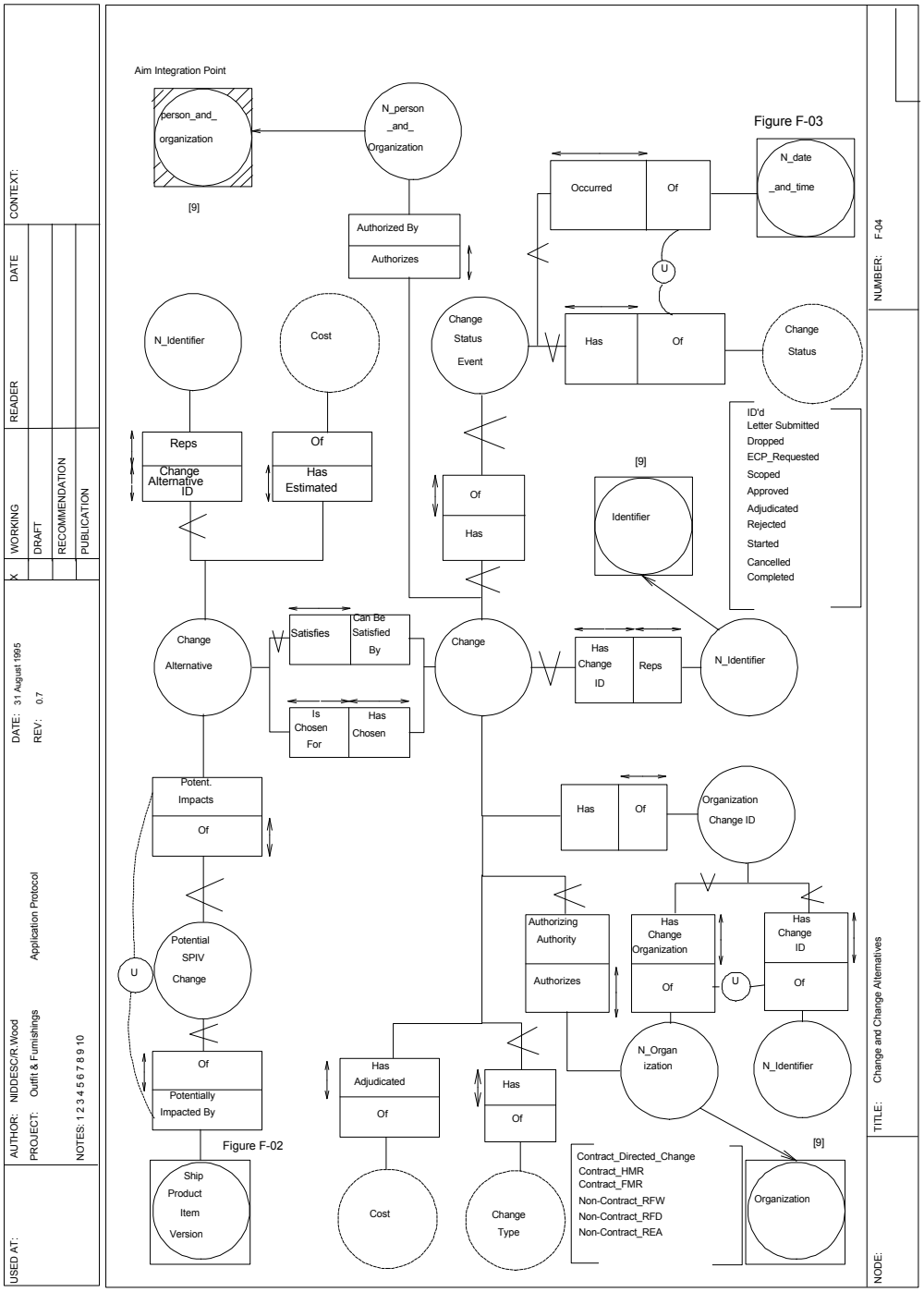

Figure F. 4 Change and Change Alternatives

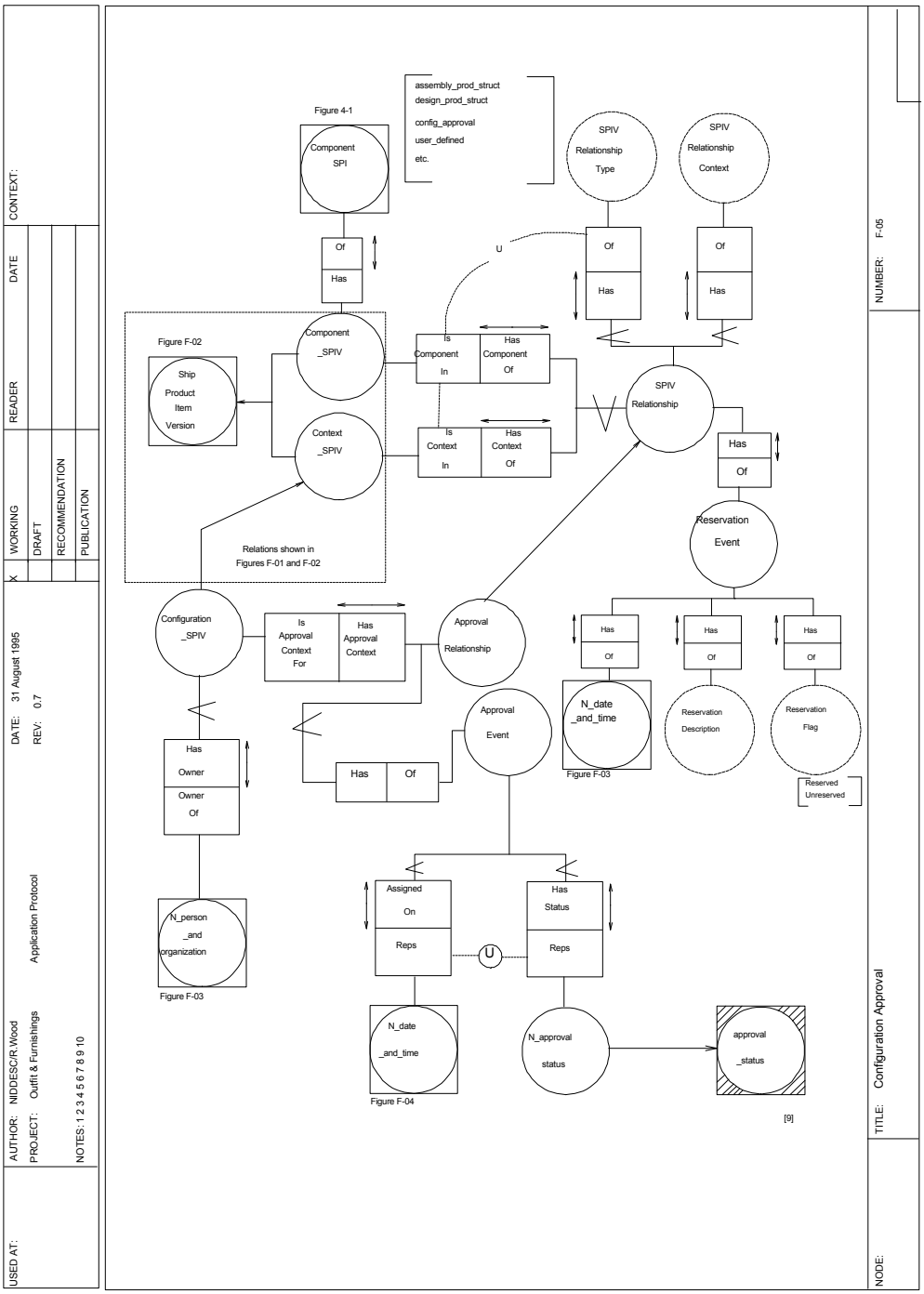

Figure F. 5 Configuration Approval

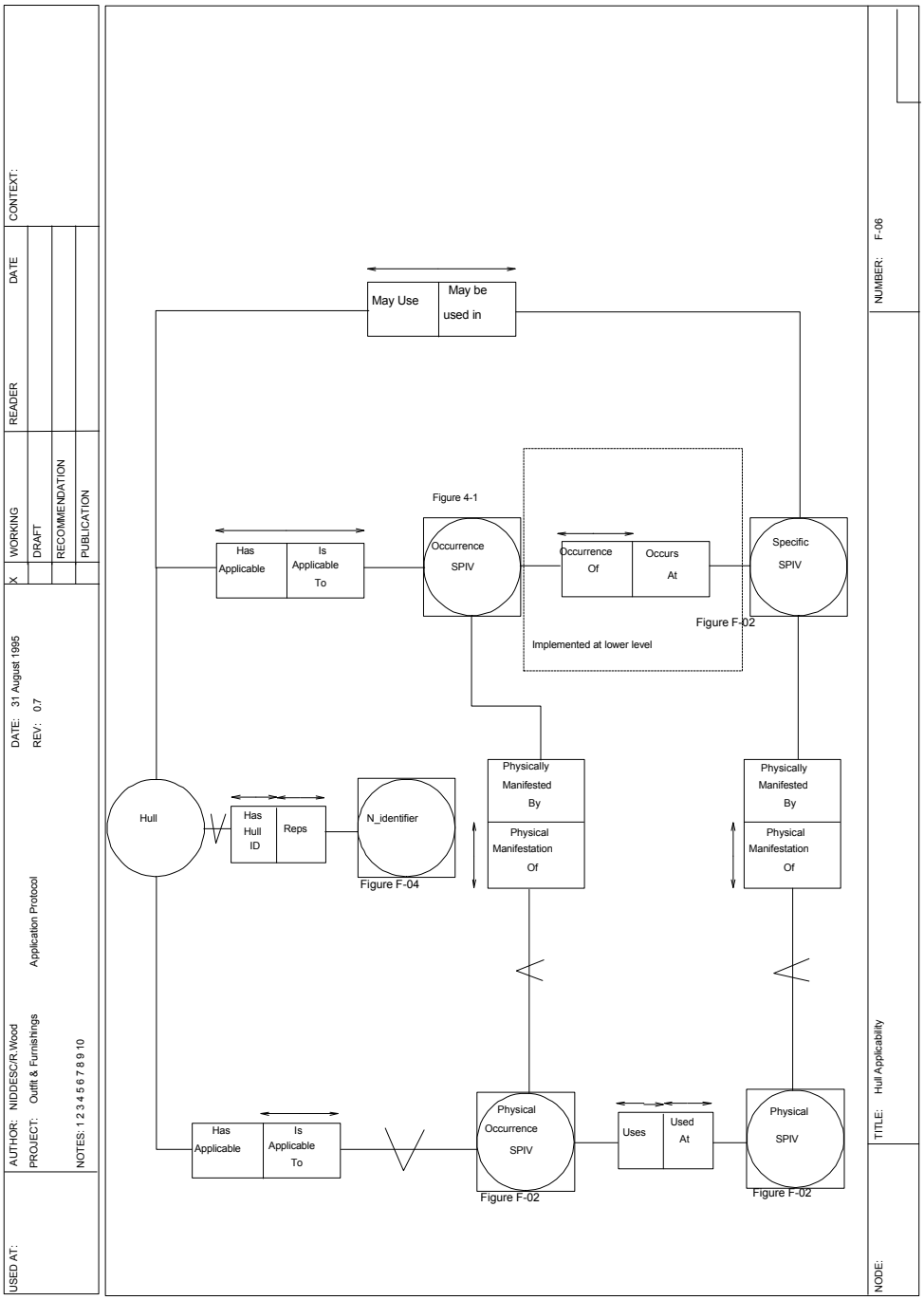

Figure F. 6 Hull Applicability

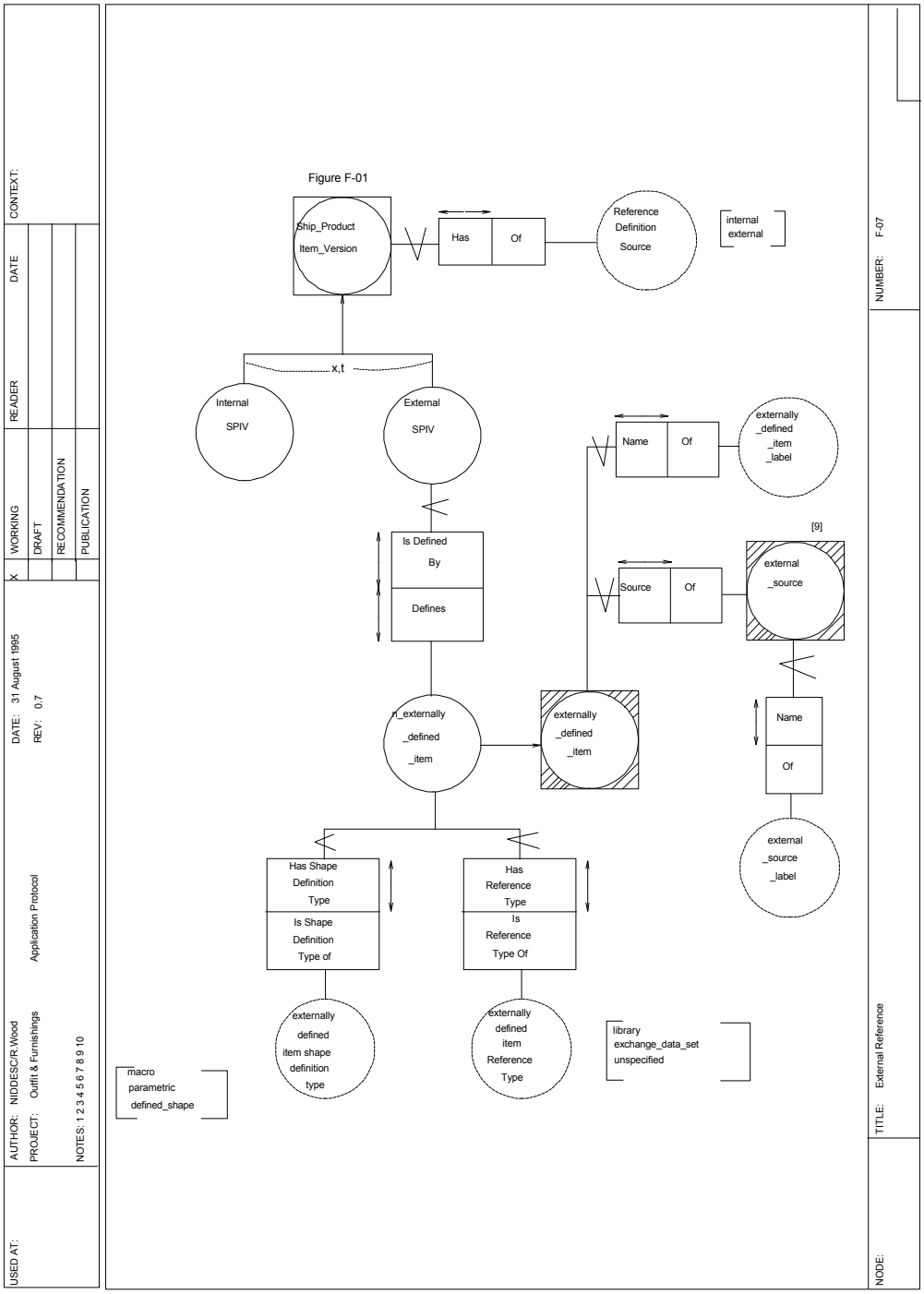

Figure F. 7 External Reference

F.2 External Reference Access Model

As noted in section 3.2.5, three types of data exchange situation require the use of an item which is not contained in the exchange data set from which it is referenced. These are:

a) The reference to an item whose definition is stored in a defined external library or catalog;

b) The reference to an item whose definition is not stored in the exchange data set or in an external library or catalog. The item's definition may be stored in an exchange data set which has been previously transmitted. However, the item's definition may not have been transmitted previously. It may be sent subsequently, or not at all.

c) The reference to external descriptive data which is not addressed by any exchange Application Protocol, but rather is intended to serve as reference data for users of the exchanged data. This later category is handled informally through the use of attributes containing character strings naming the external reference information source.

The information model supporting the first two of these situations is depicted in Figure F-10. The functionality of this model and its assumptions are:

a) Any Ship Product Item Version may be externally represented in the context of a particular exchange. Therefore, the set of all SPIV's is subdivided into two classes, "Internal" and "External". The class in which a particular SPIV falls is defined by its mandatory "Reference_Definition_Source" attribute.

The test to be applied in determining how a particular SPIV is to be classified by the sending site is whether or not all its mandatory data is defined. Entities without all mandatory data defined must be classified as external. However, entities with all mandatory data defined may be classified as external. This means:

1) SPIV entities may be sent and declared internal in the absence of their associated shape data (which is mandatory). This capability allows exchanges of non-graphic information without requiring the receiver to bind a shape definition to each received entity.

2) Entities that are fully defined on the sender's system may be declared external with a reference_type of either "library", or even "unspecified". The later capability could be used, for example, in combination with an item's approval_status, to prohibit the transfer of an item's definition data, while at the same time notifying the receiving site that it exists by declaring it an exchange data set.

Specification of whether an item is internal or external to an exchange data set is left to procedures established between sender and receiver.

b) An SPIV entity may have all its mandatory attributes defined, and thus be declared "internal", while some of its attributes are themselves SPIV's that are declared "external". The most common example of this will be an Engineering Part Occurrence defined as internal while its (mandatory) "is_occurrence_of" Specific Engineering Part is defined as "external"/"library".

c) SPIV entities that are classified as external must have a reference type defined which may be "library", "exchange_data_set" or "unspecified". The use of "exchange_data_set" and "unspecified" allows the sender to account for exchange sequence. It is recommended that an item sent previous to the current exchange (and unchanged from that point) be declared external/"exchange_data_set" with the identity of the exchange data set in which the item was sent given as the item's external_source.name.

   SPIVs entities not yet sent, nor defined in an external catalog, should be declared "unspecified" to inform the receiver not to search for the item's definition.

d) SPIV entities classified as "external"/"library" should define the library/catalog name in external_source.name and the item's catalog identifier in externally_defined_item.name.

e) Occurrence_SPIV's defined as external must refer to an exchange_data_set or be unspecified.

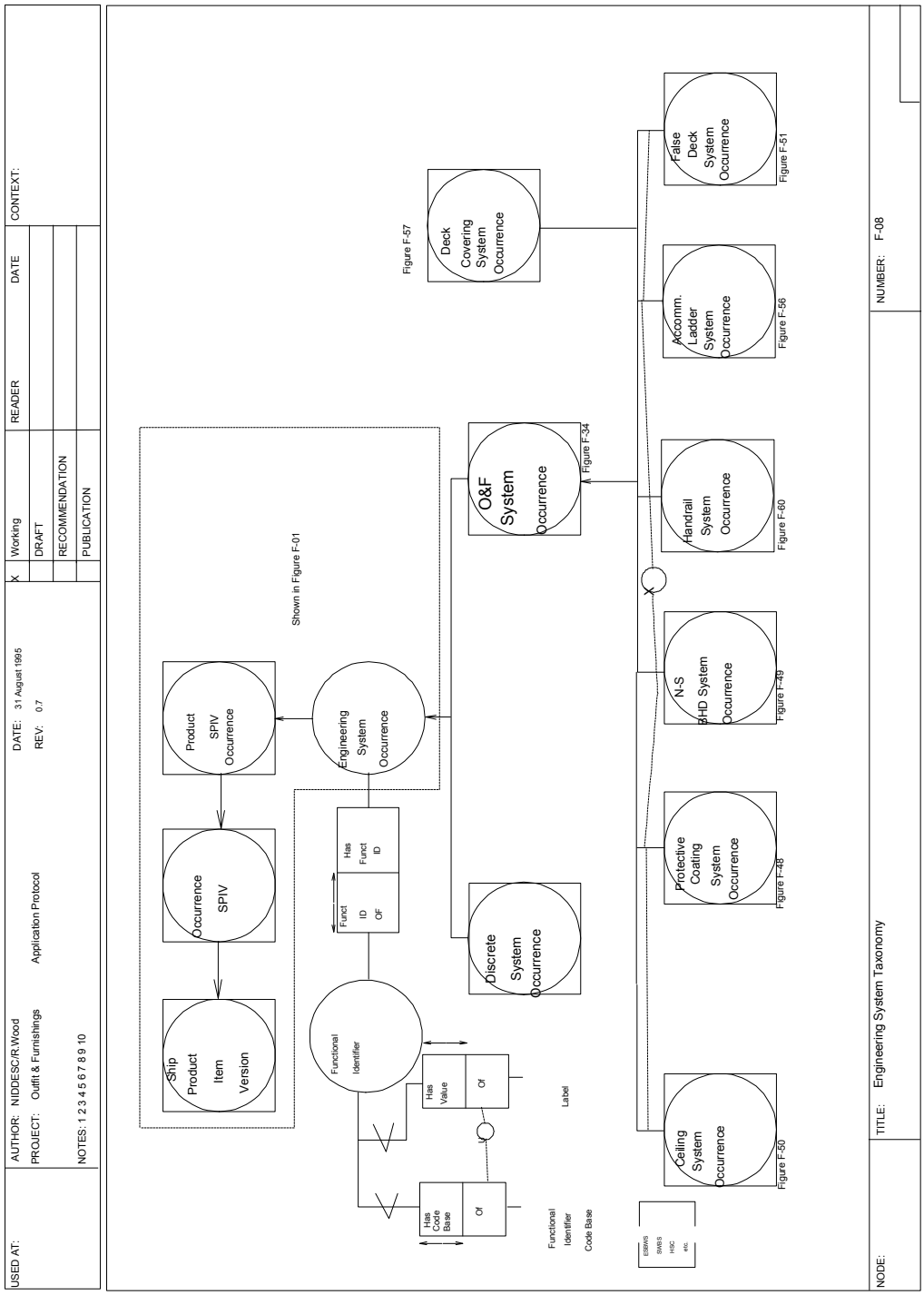

Figure F. 8 Engineering System Taxonomy

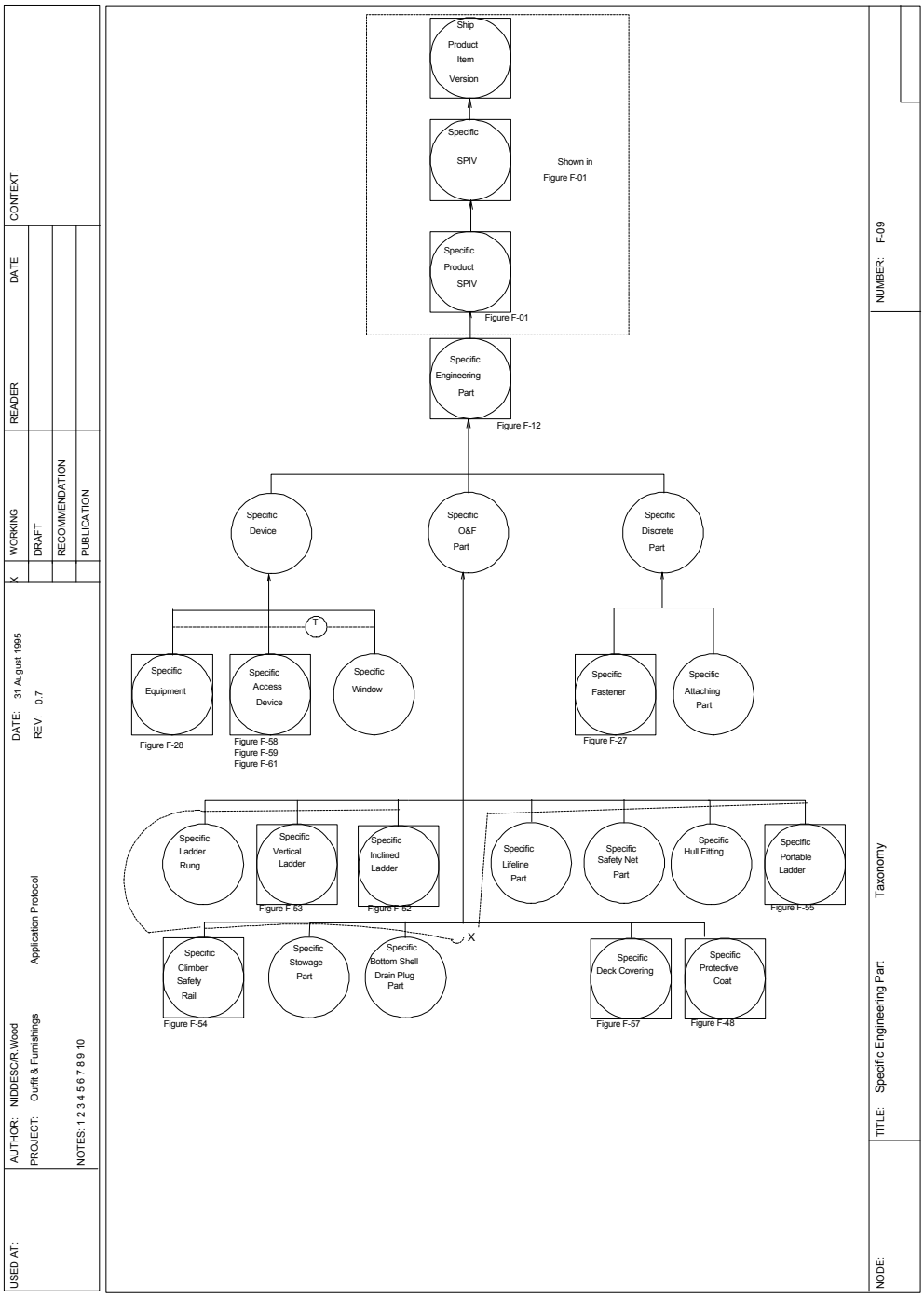

Figure F. 9 Specific Engineering Part Taxonomy

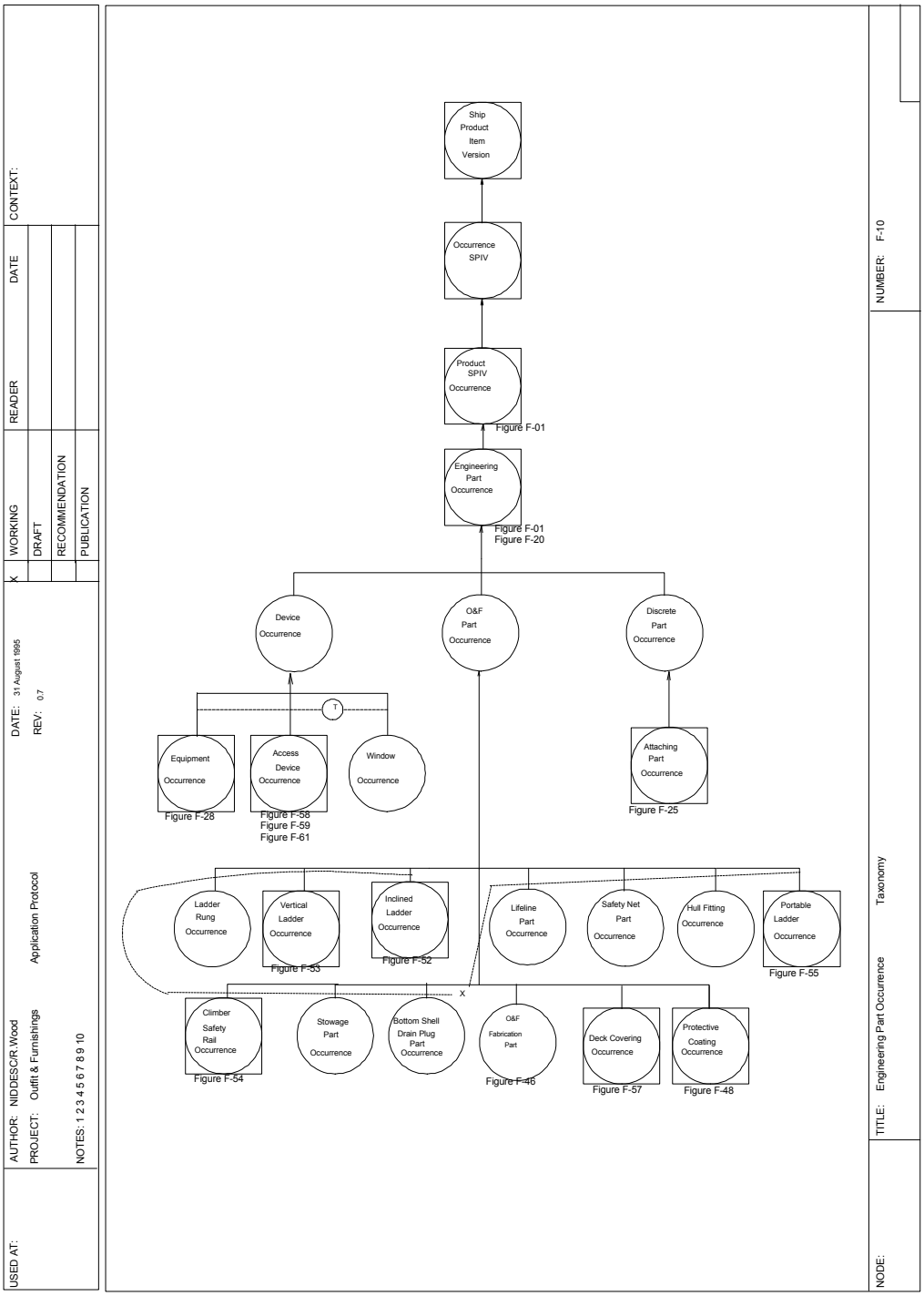

Figure F. 10 Engineering Part Occurrence Taxonomy

F.3. Engineering Systems Reference Models

The reference models in this section describe product information which defines the general class of Engineering System in which O&F systems are contained. O&F_Systems are a class or subtype of Engineering System.

- The reference models in this section provide the following utility functionality:
- Definition of the main relationships of O&F items (Figure F-11)
- Definition of Equipment Item Interconnection Relationships (Figure F-11)
- Definition of the properties of all Specific (Figures F-12 through F-18) and Occurrence (Figure F-20) Engineering Parts
- Attachment Connectivity of "Attached/Insulated Objects" and Attaching Parts Figure F-11 and Figure F-24)
- Insulation of Engineering Parts/O&F Interconnects (Figure 4-26)
- Definition of joint (Interface_SPIV_Occurrence_ Implementation) details between O&F Ends (Figure F-27)
- The specification of Equipment attributes (Figure F-28, Figure F-29, Figure F-31 and Figure F-32, Figure F-32)
- Definition of O&F System Taxonomy (Figure F-08)
- Taxonomy of Specific Engineering Part (Figure F-09) and Engineering Part Occurrence (Figure F-10)
- Definition of Specific Path Arc (Figure F-21)
- Definition of O&F Ends (Figure F-23)
- Definition of Attached/Penetrating Object and Attaching/Penetrated Object (Figure F-25)
- Definition of Insulation (Figure F-26)
- Weight Condition (Figure F-19)

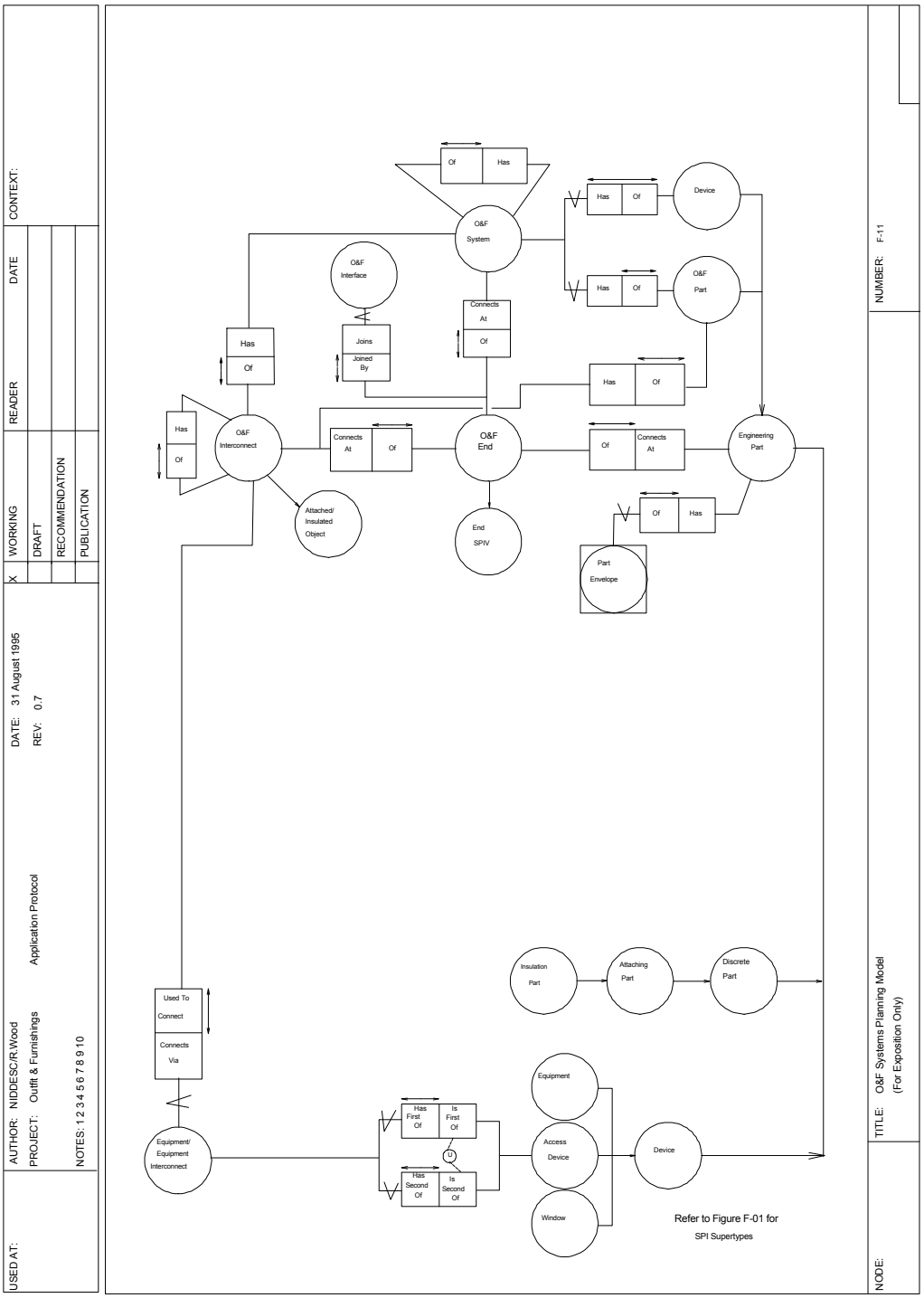

Figure F. 11 O&F Systems Planning Model

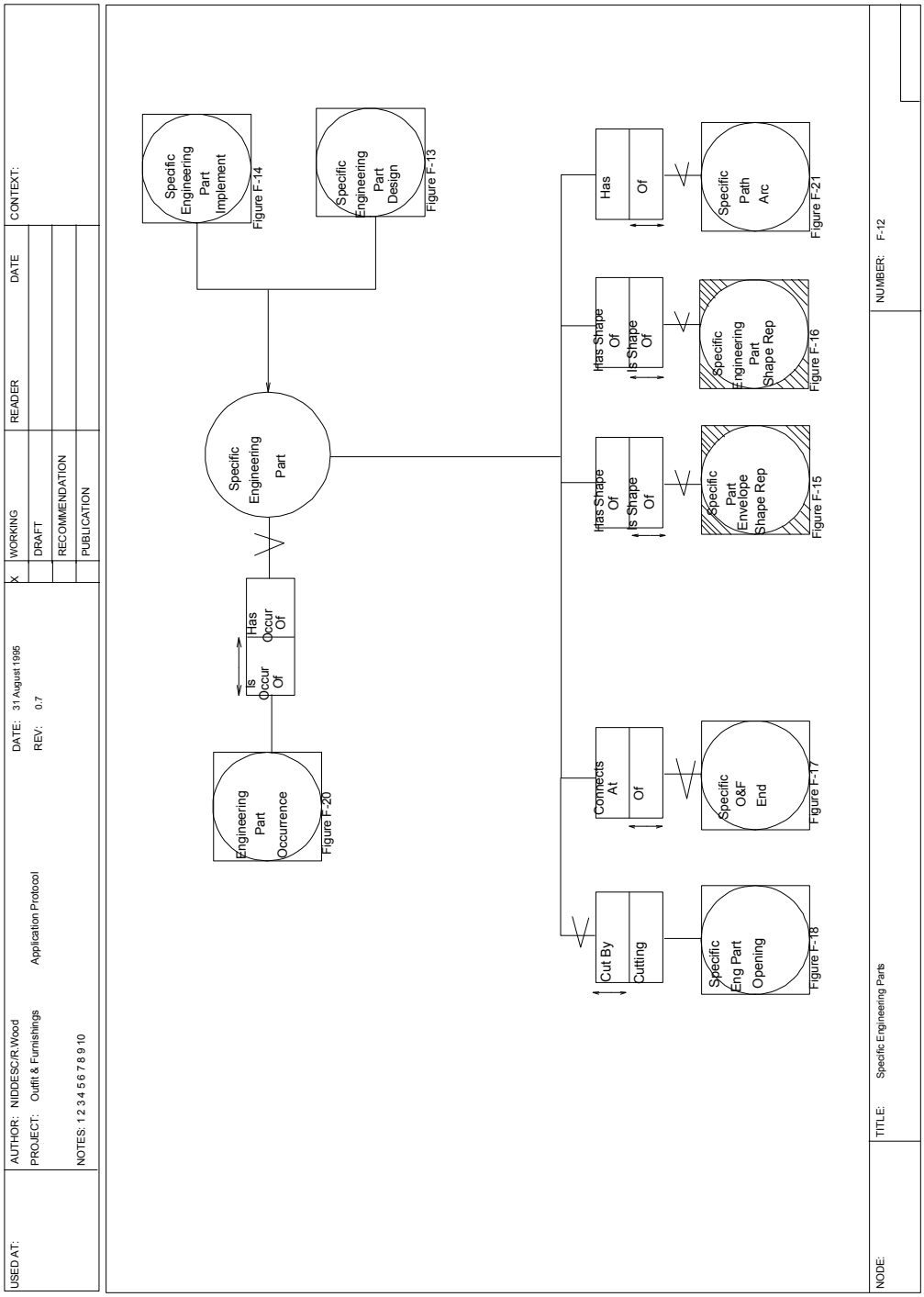

Figure F. 12 Specific Engineering Parts

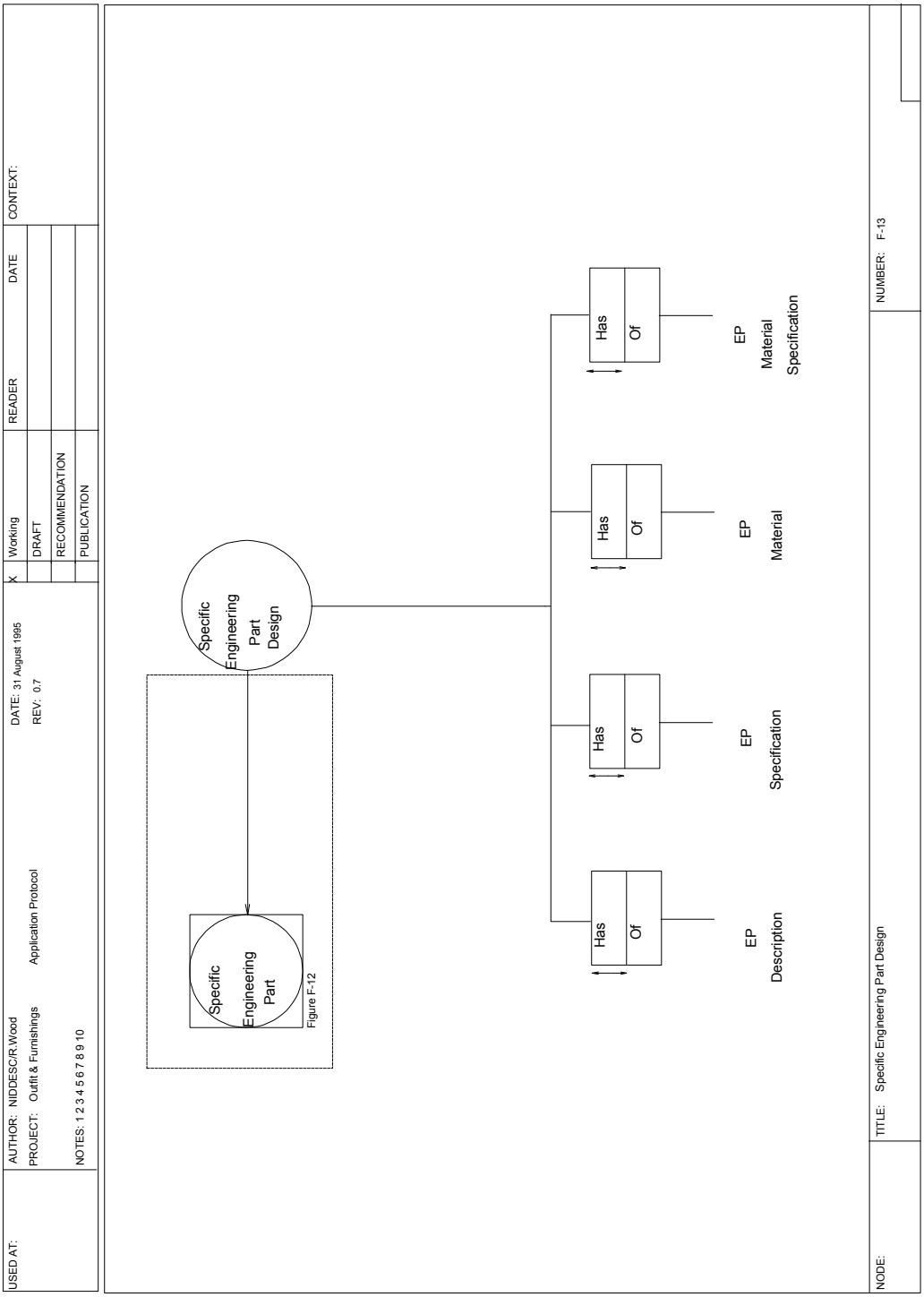

Figure F. 13 Specific Engineering Part Design

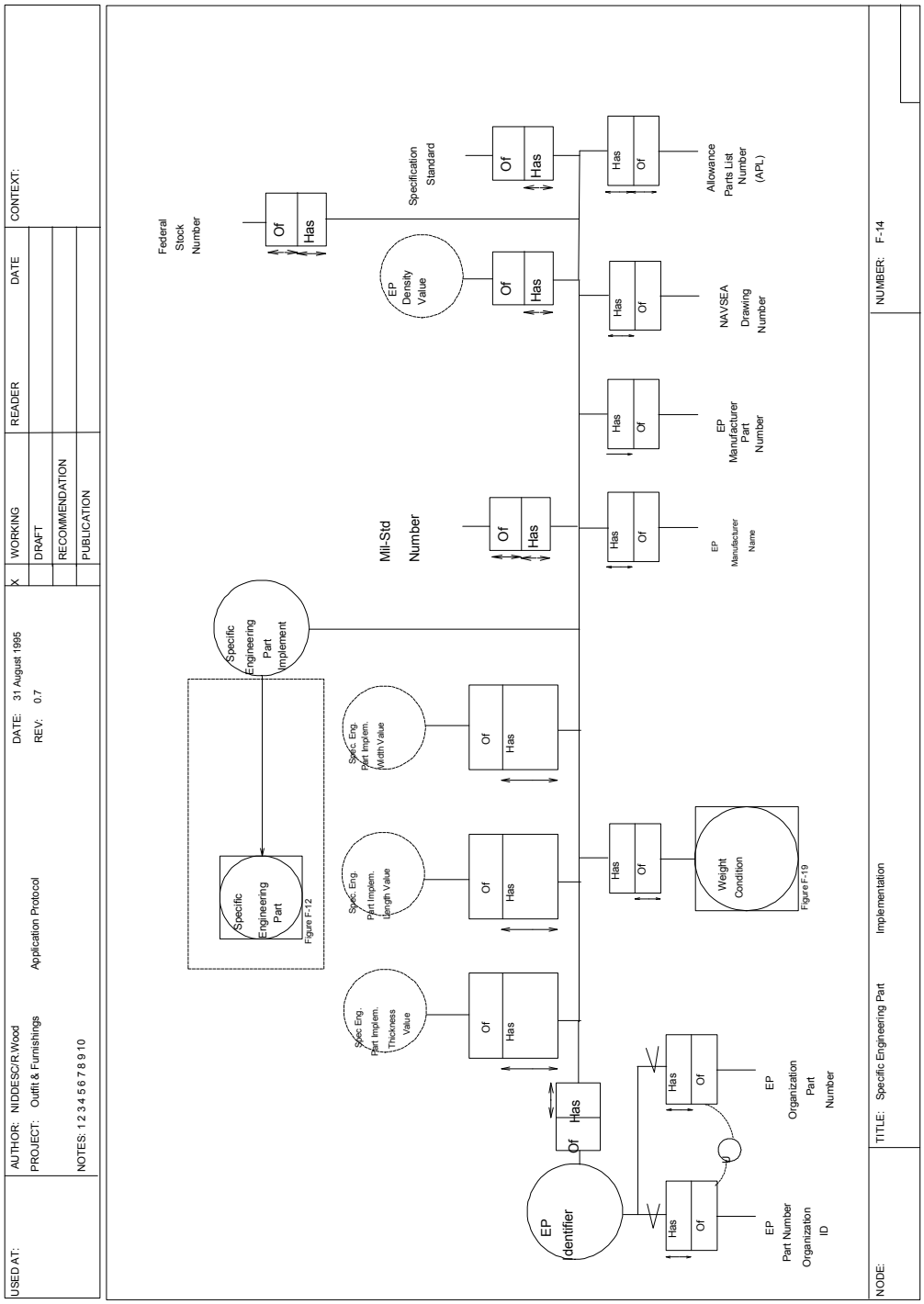

Figure F. 14 Specific Engineering Part Implementation

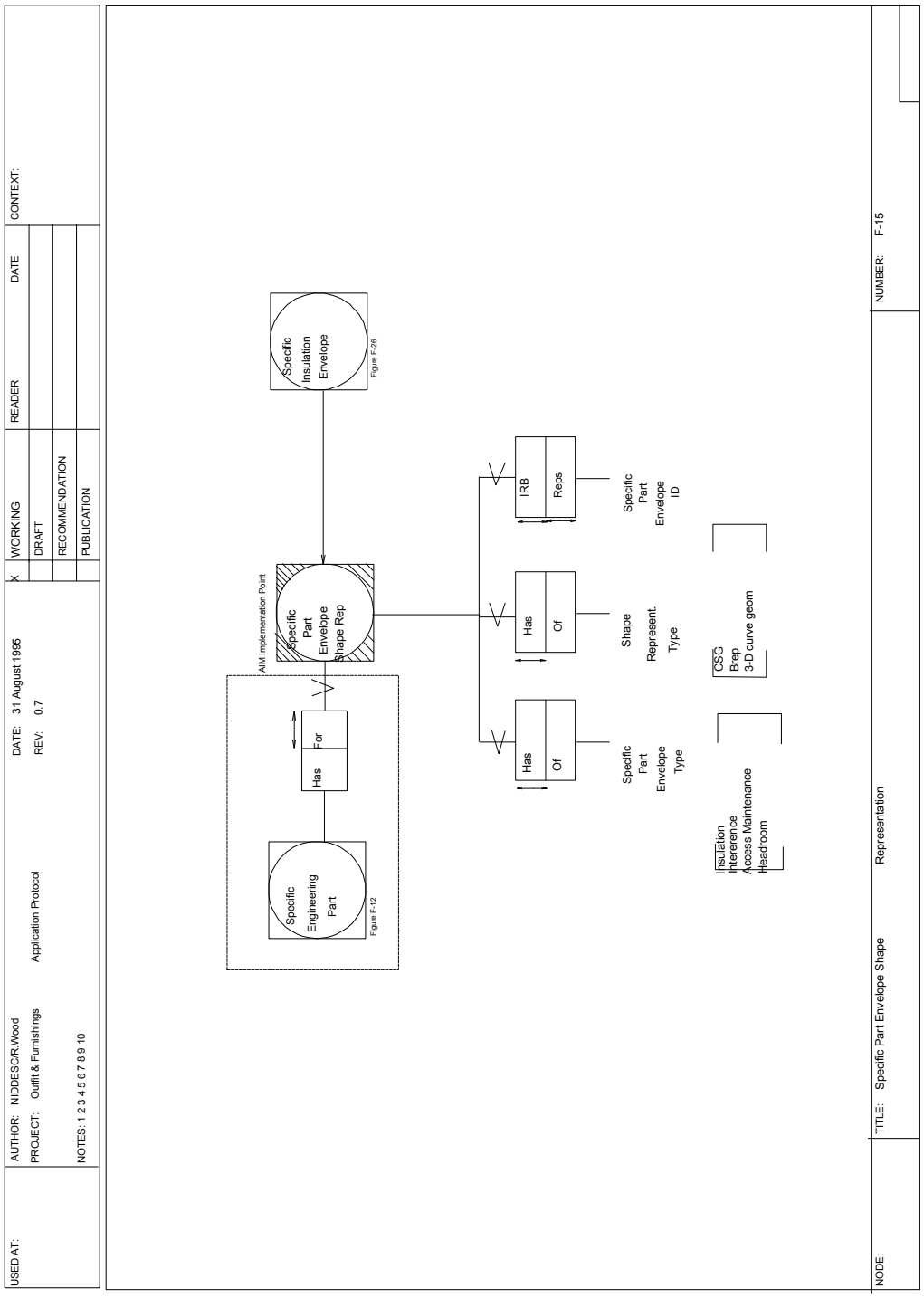

Figure F. 15 Specific Part Envelope Shape Representation

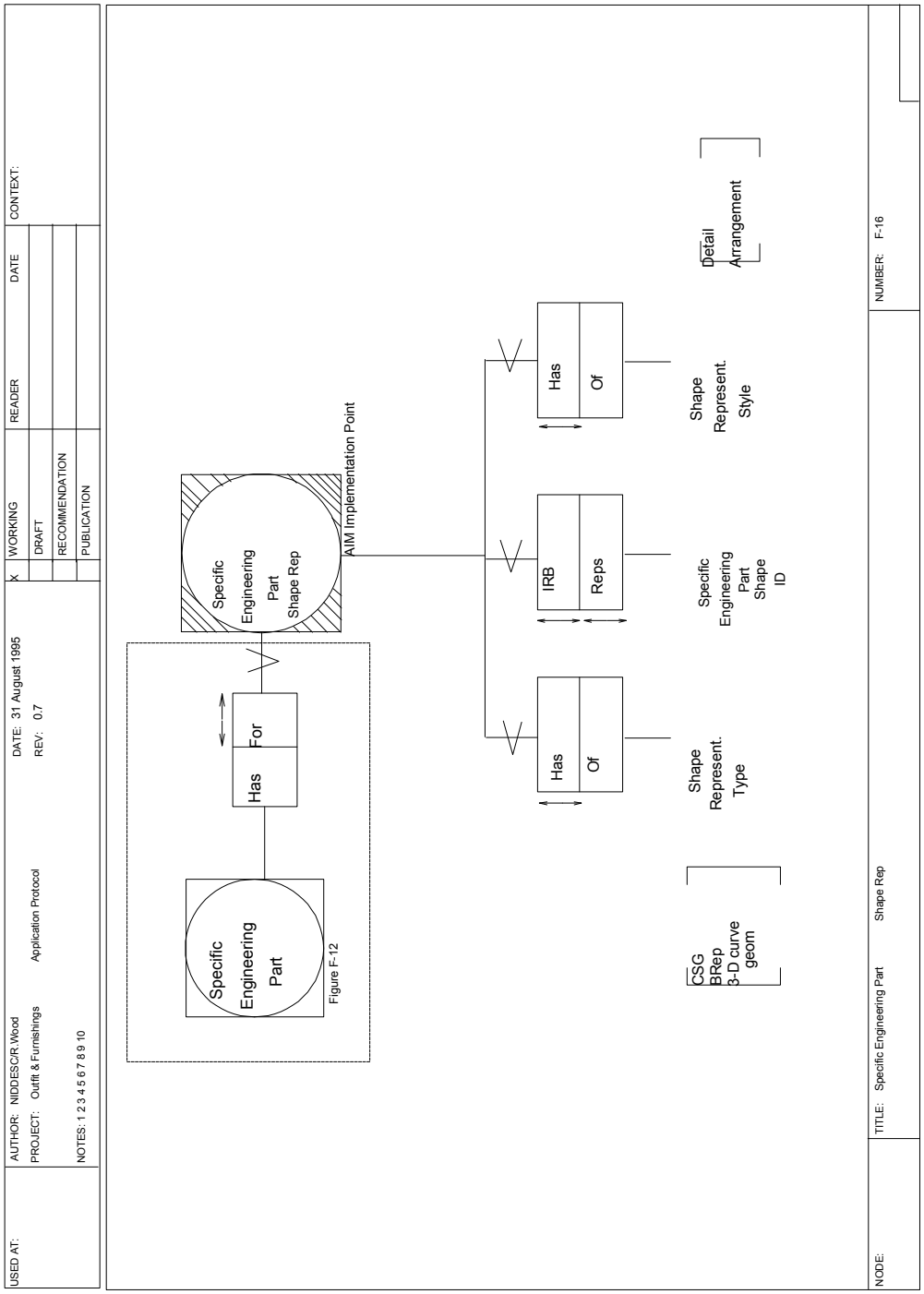

Figure F. 16 Specific Engineering Part Shape Rep

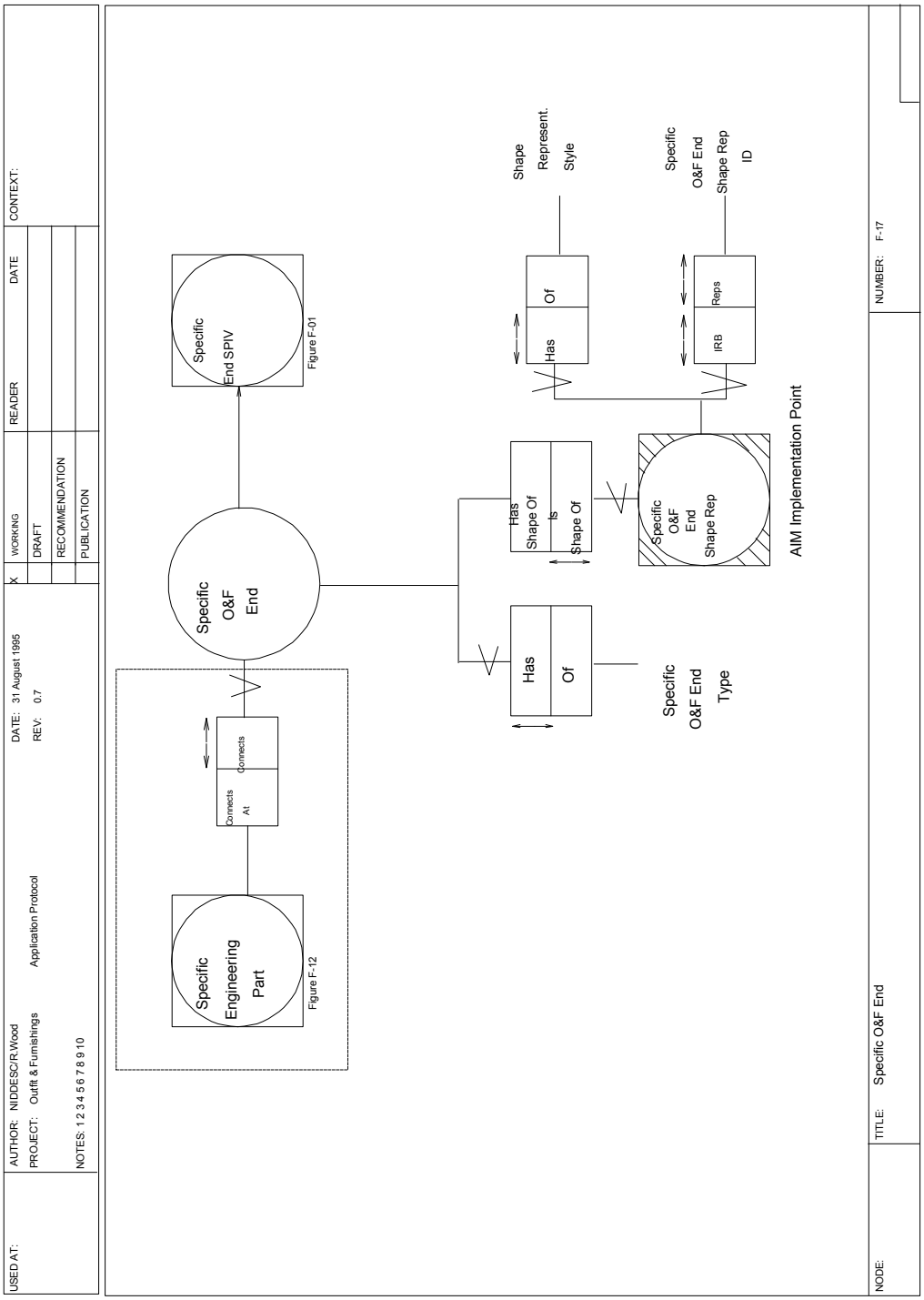

Figure F. 17 Specific O&F End

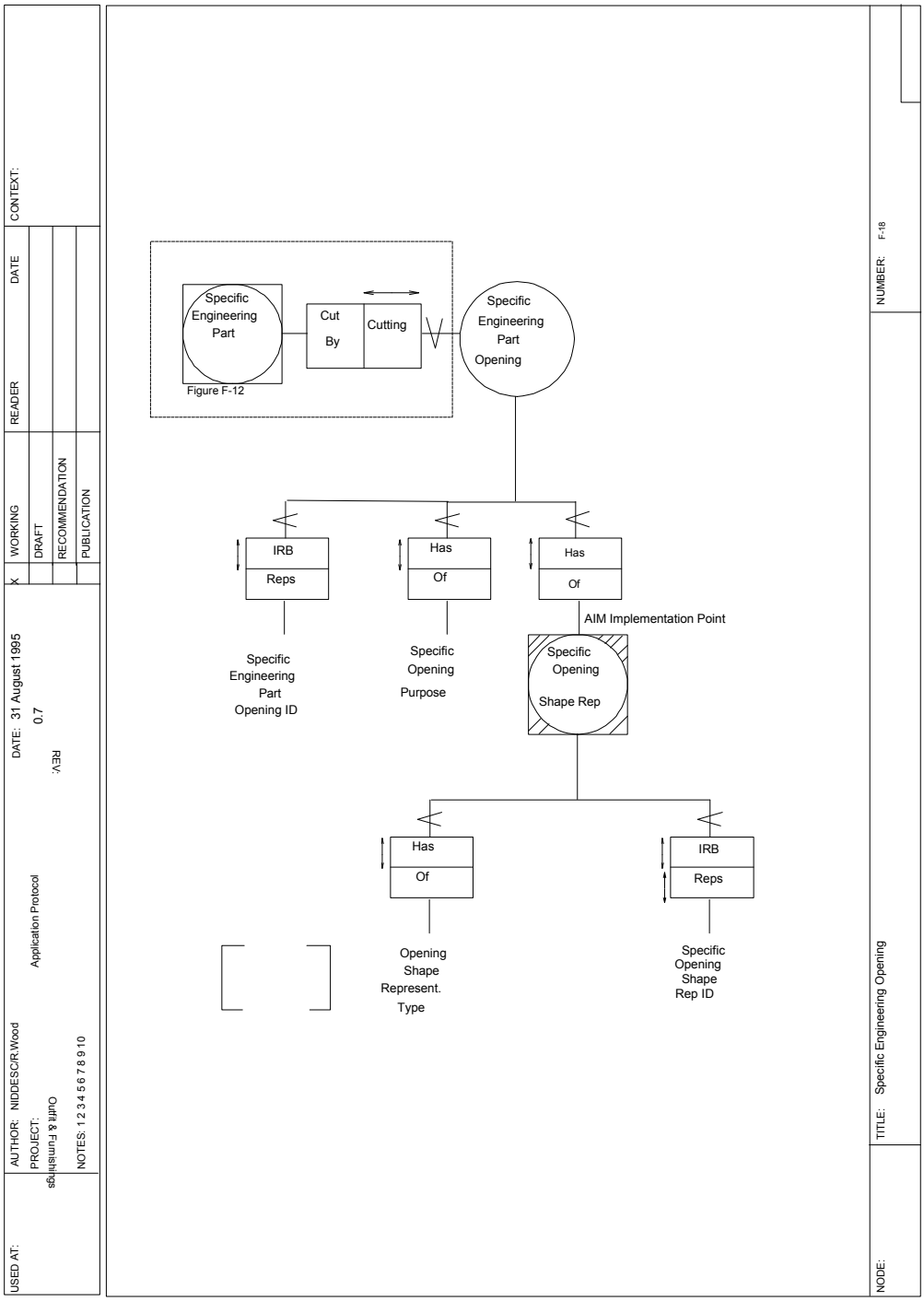

Figure F. 18 Specific Engineering Opening

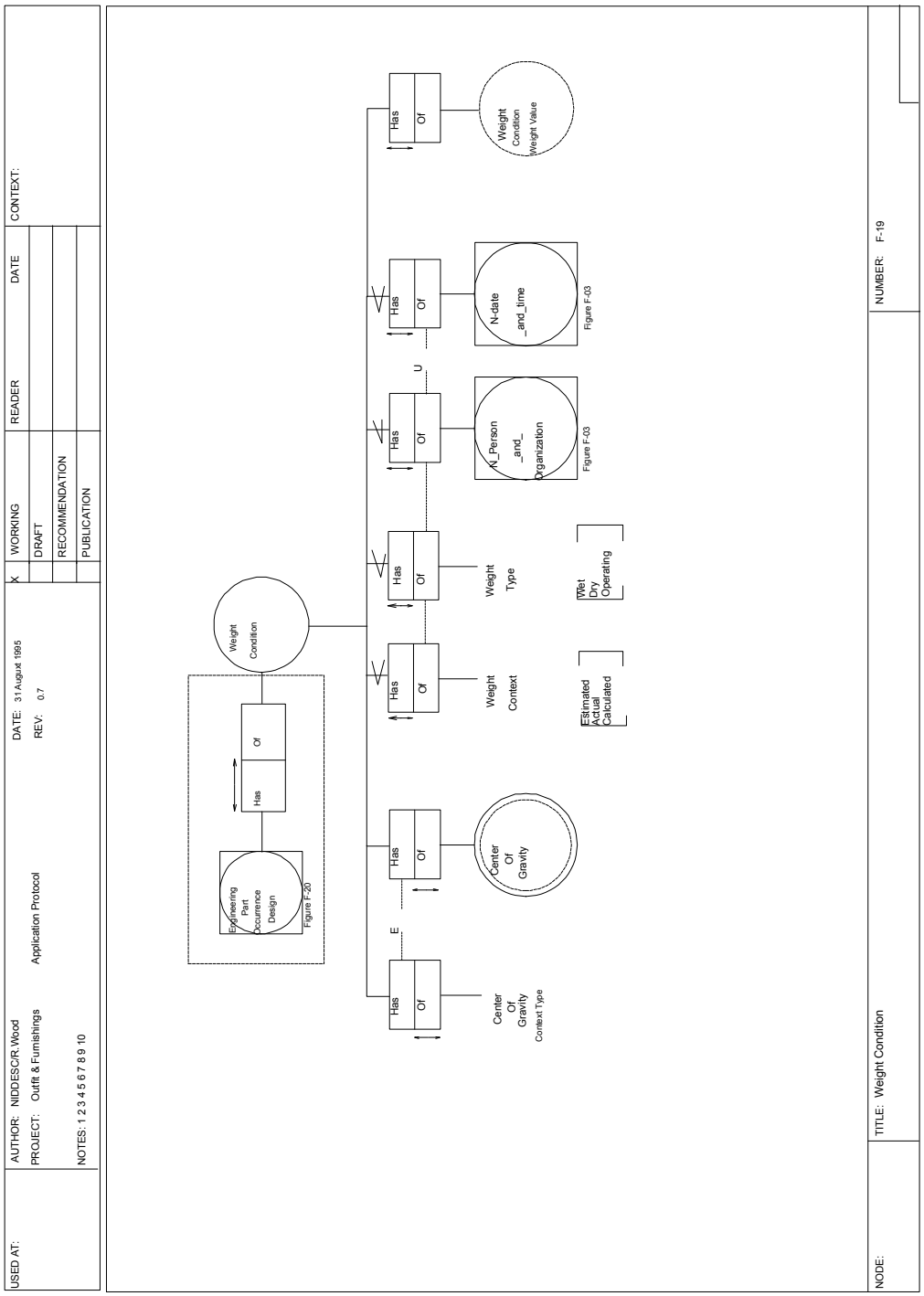

Figure F. 19 Weight Condition

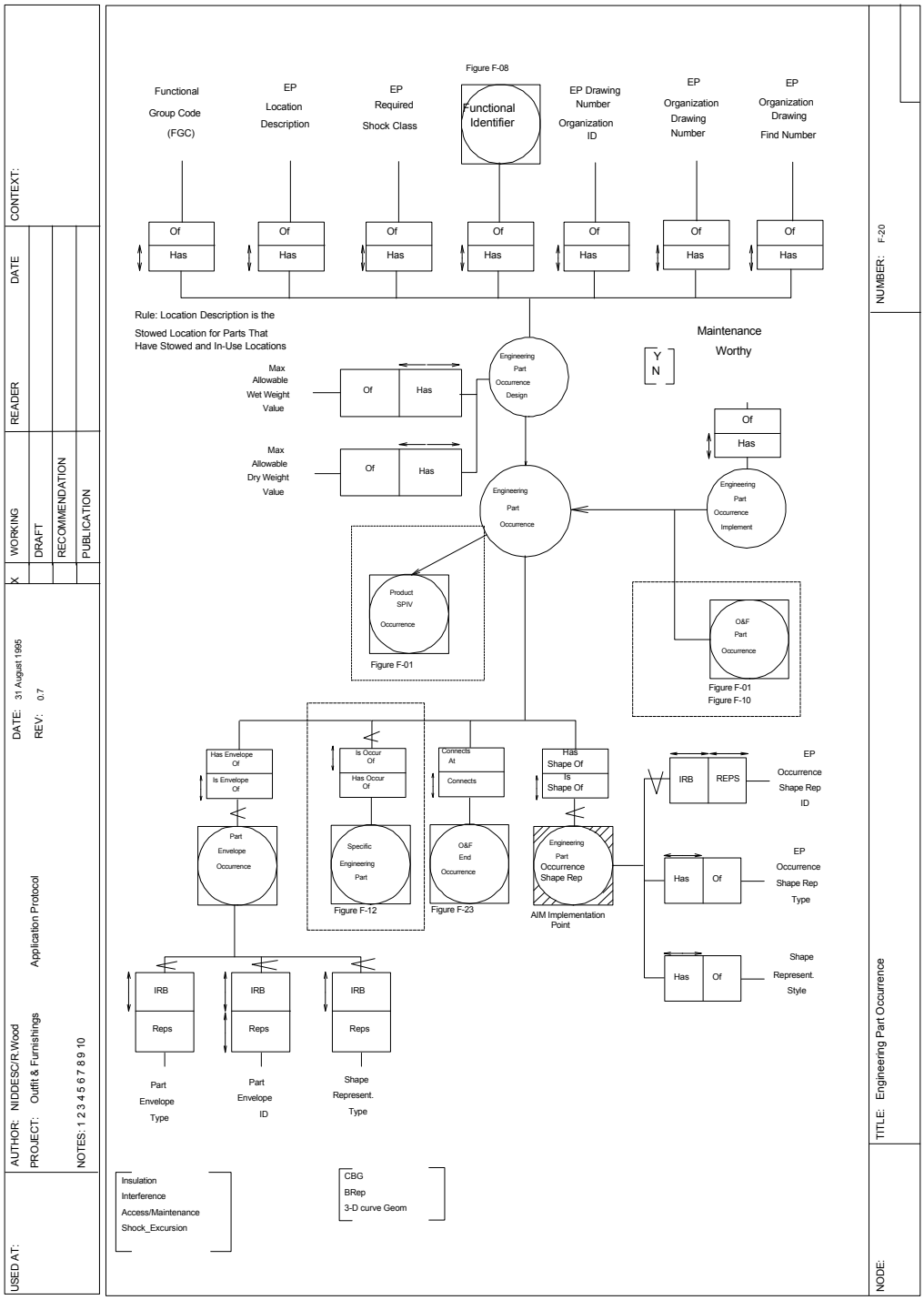

Figure F. 20 Engineering Part Occurrence

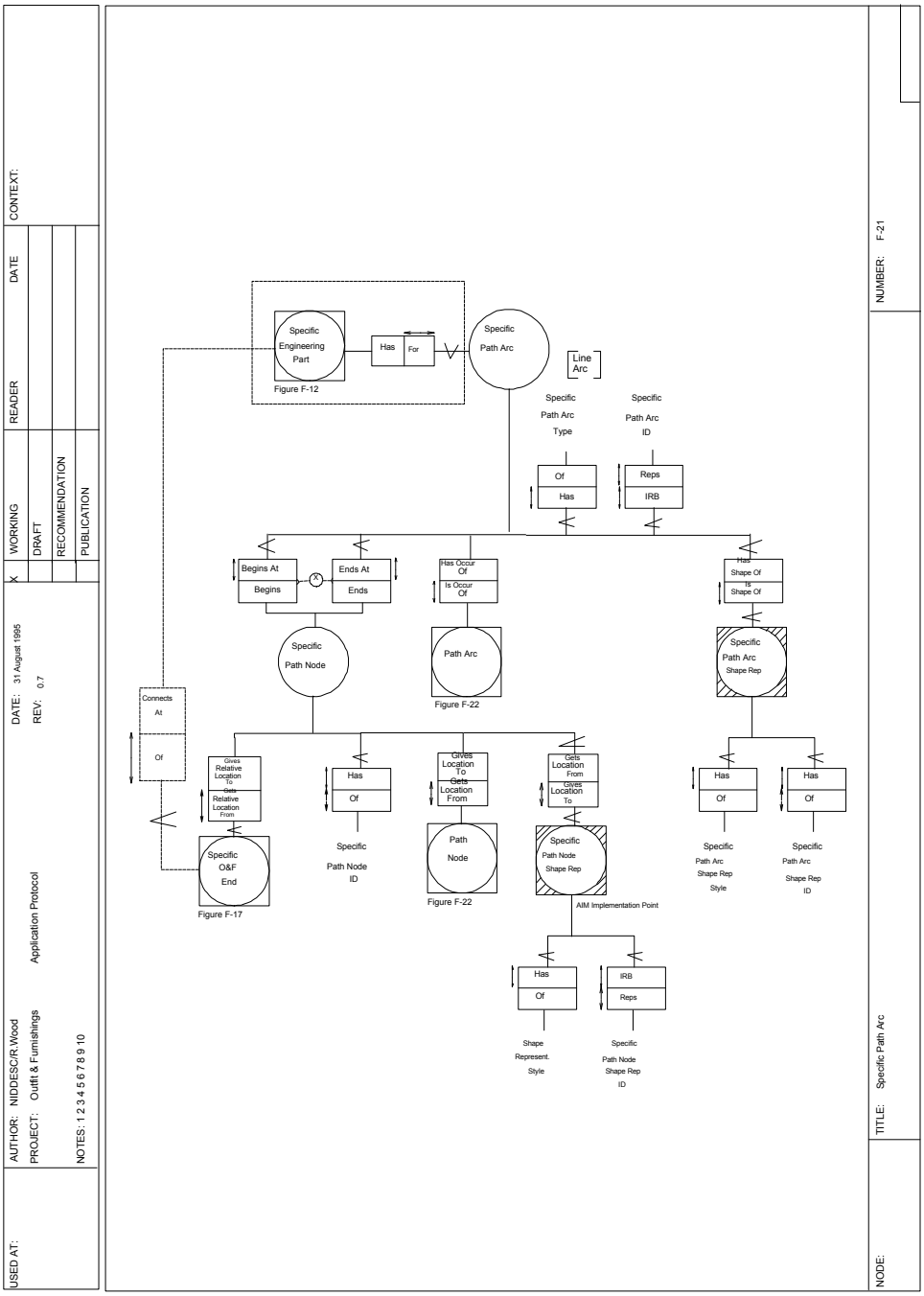

Figure F. 21 Specific Path Arc

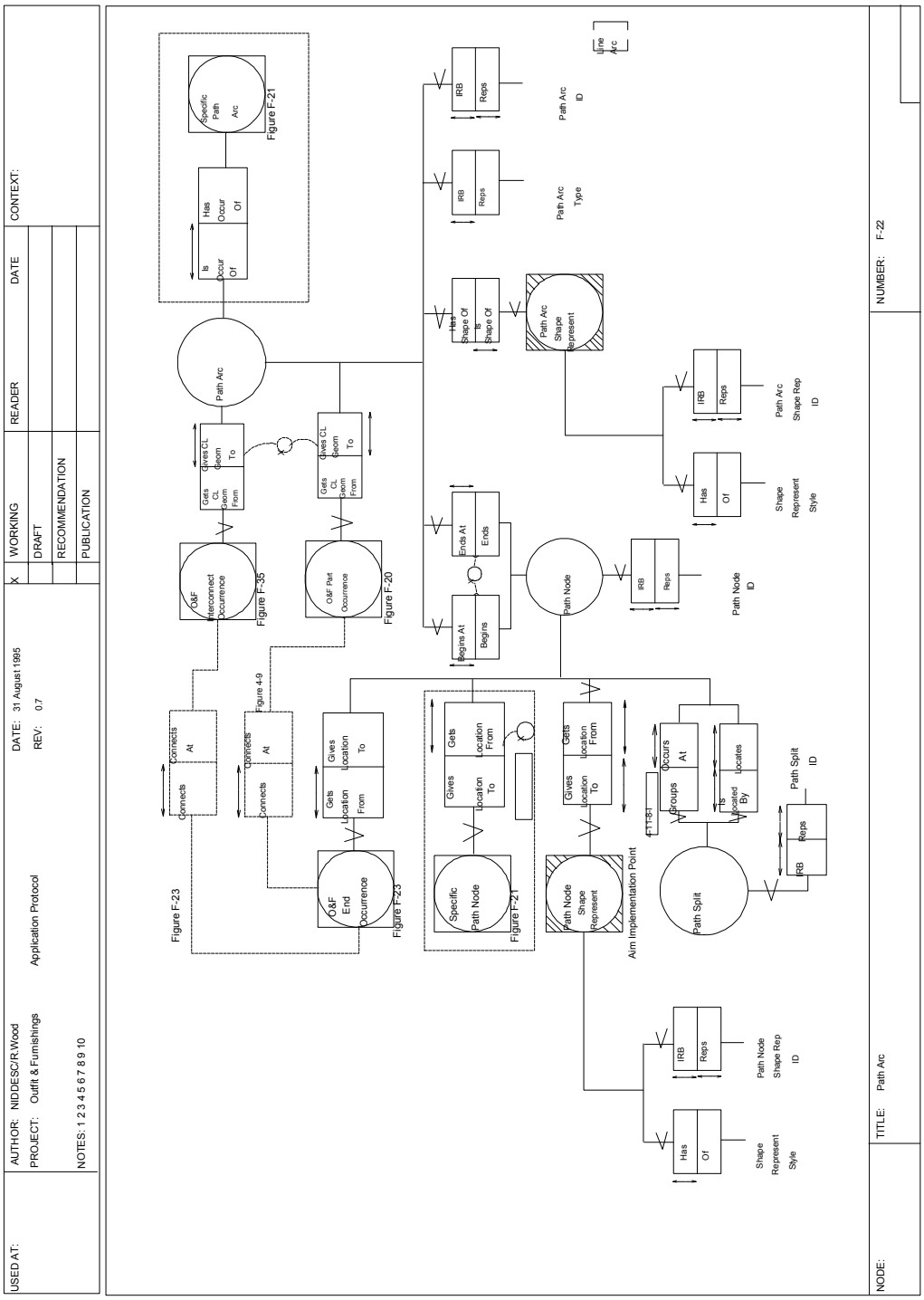

Figure F. 22 Path Arc

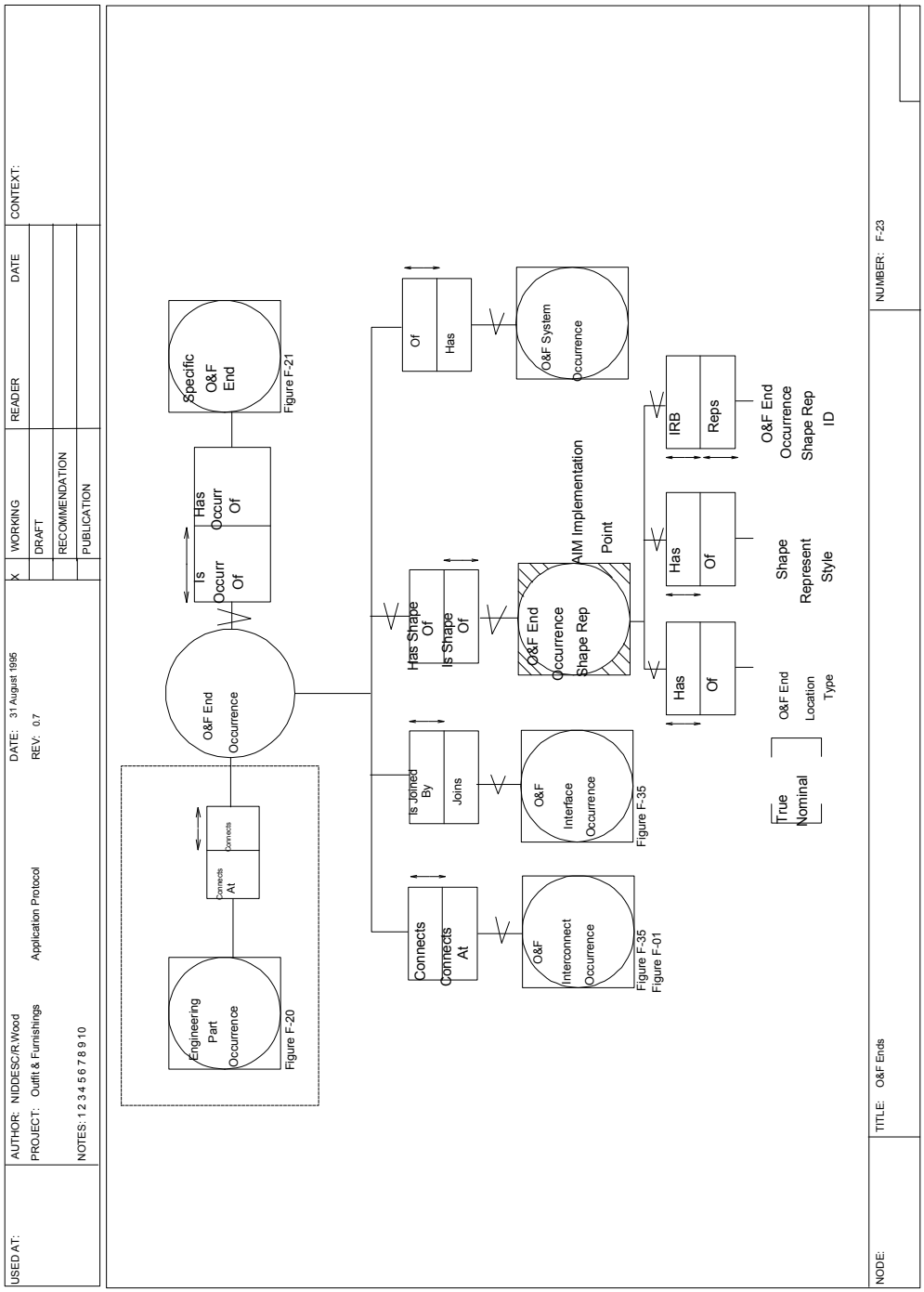

Figure F. 23 O&F Ends

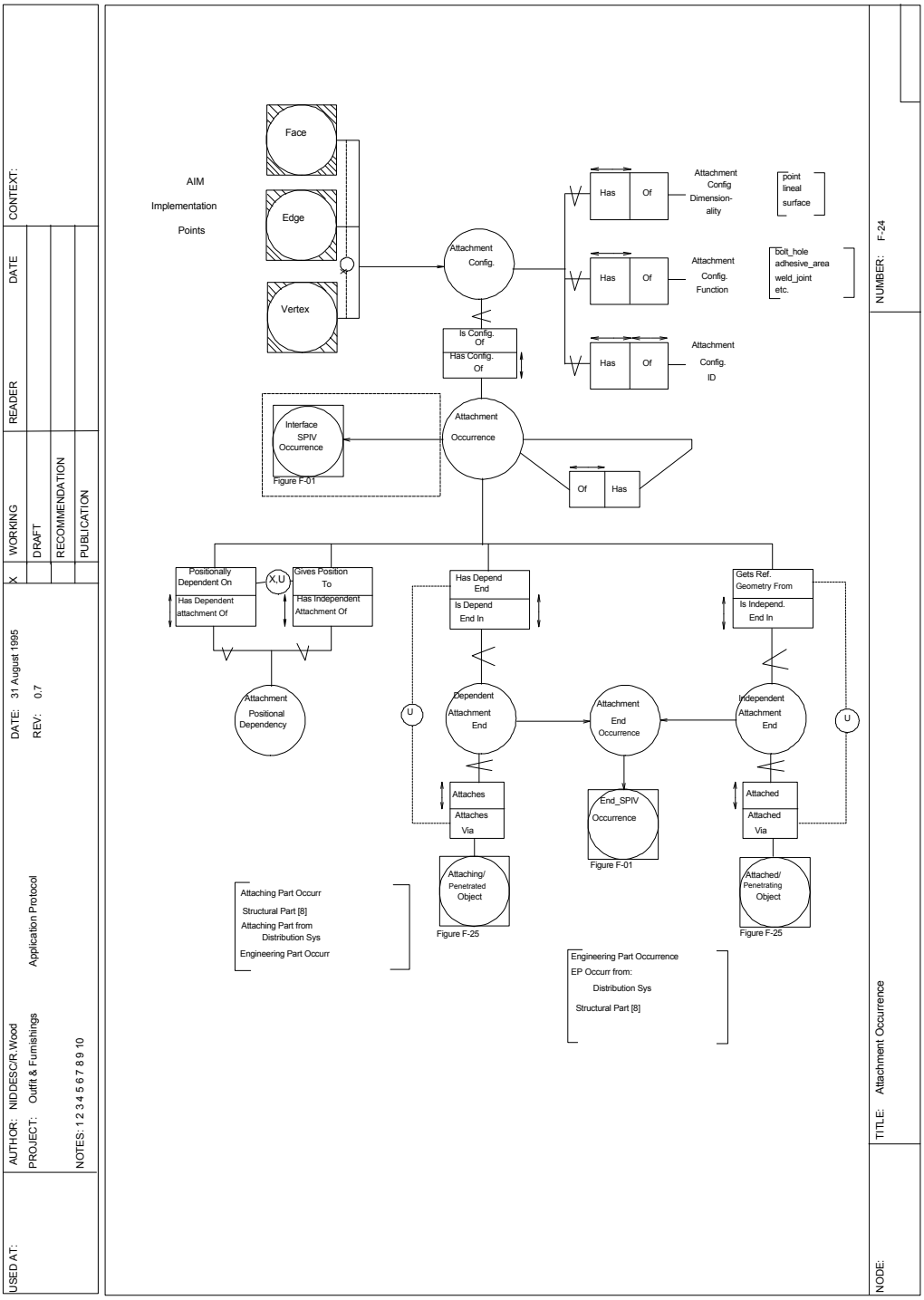

Figure F. 24 Attachment Occurrence

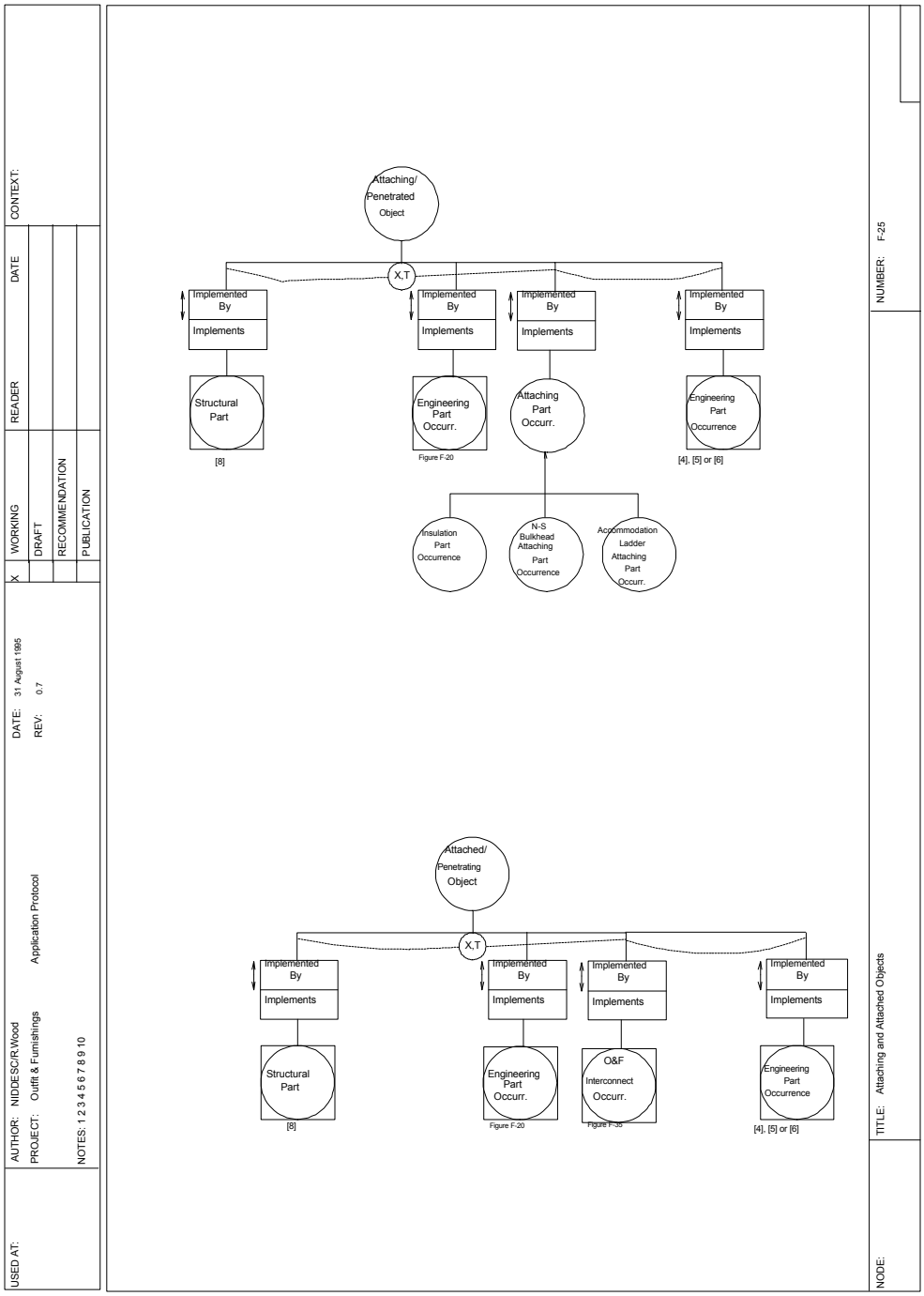

Figure F. 25 Attaching and Attached Objects

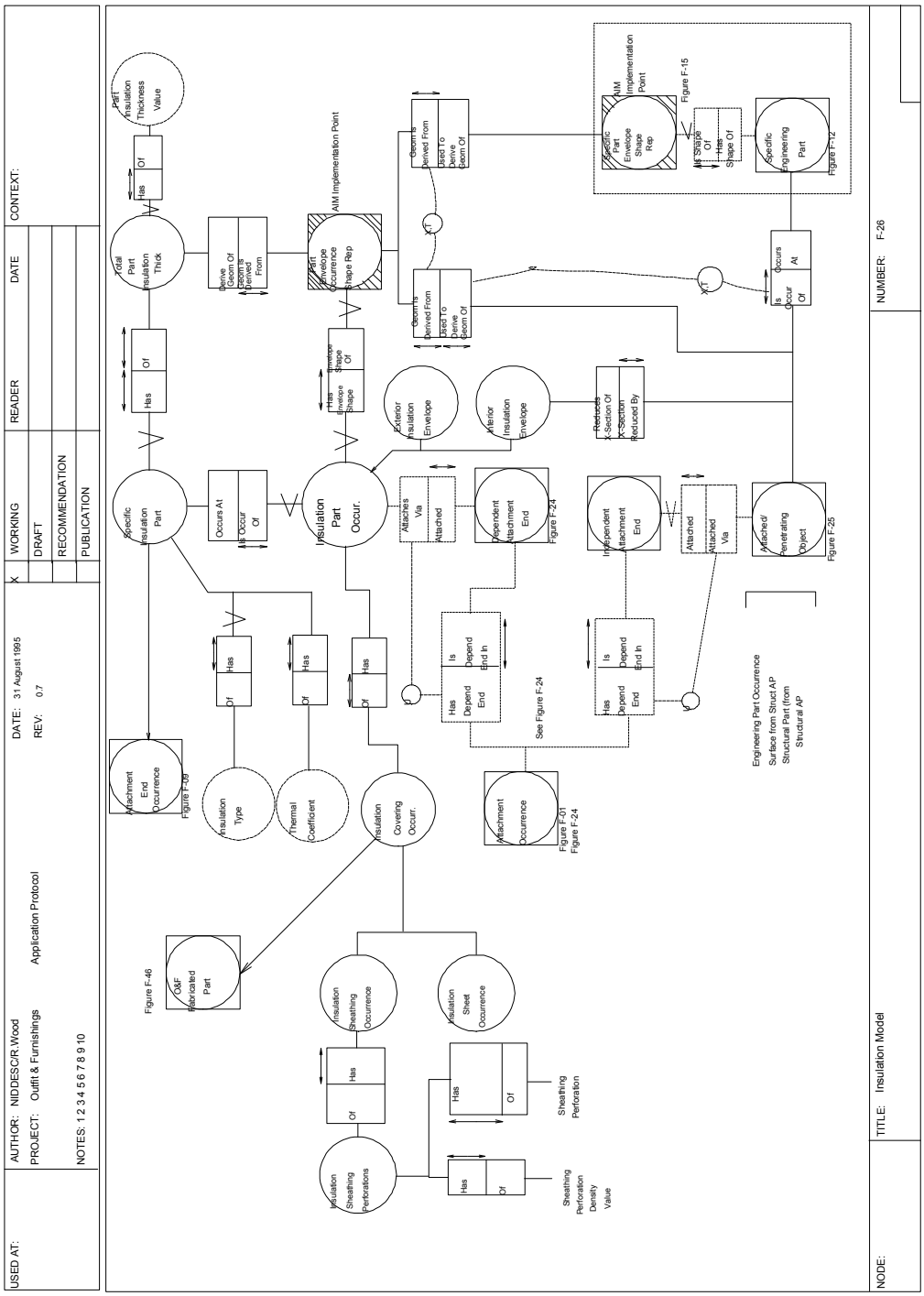

Figure F. 26 Insulation Model

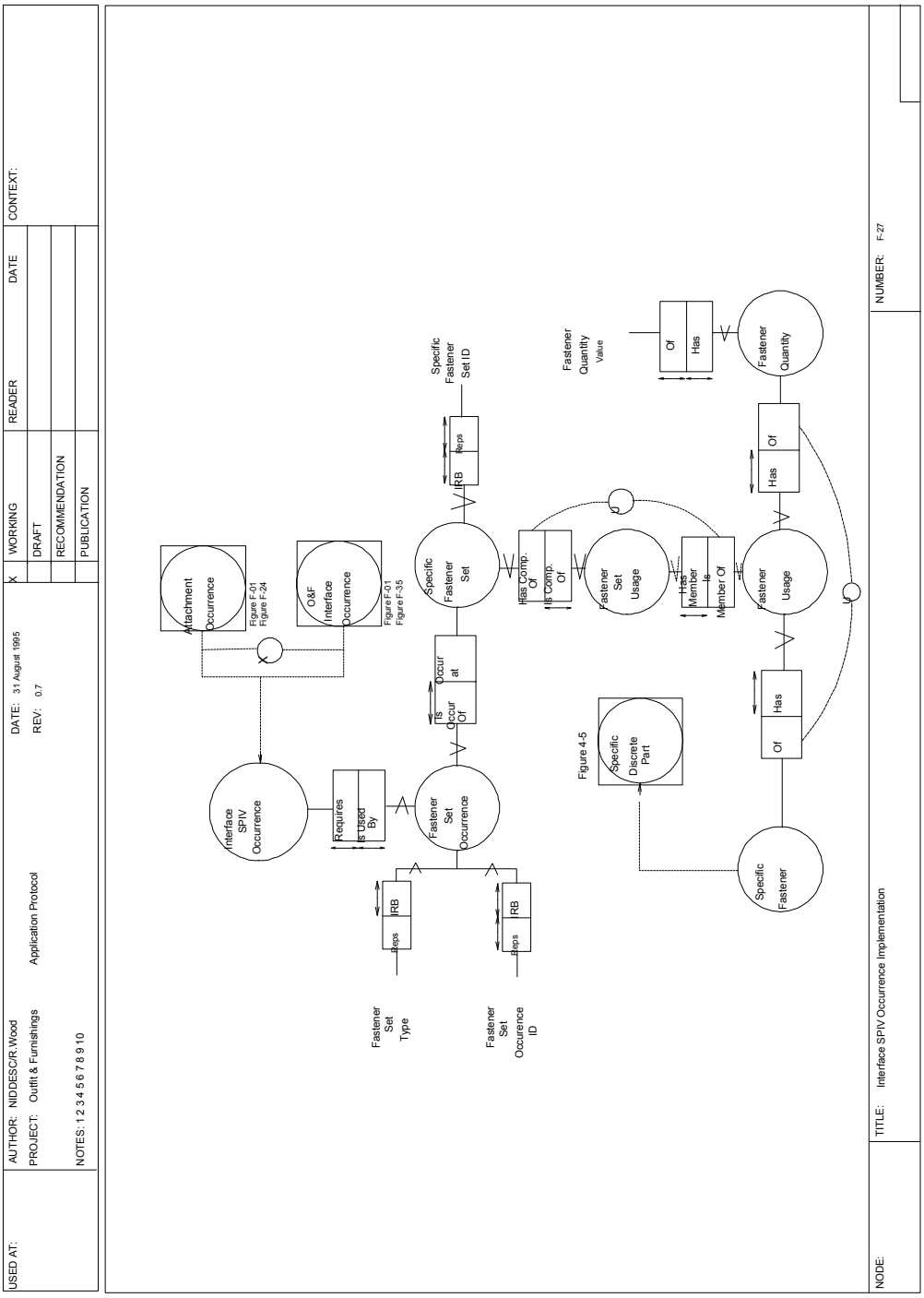

Figure F. 27 Interface SPIV Occurrence Implementation

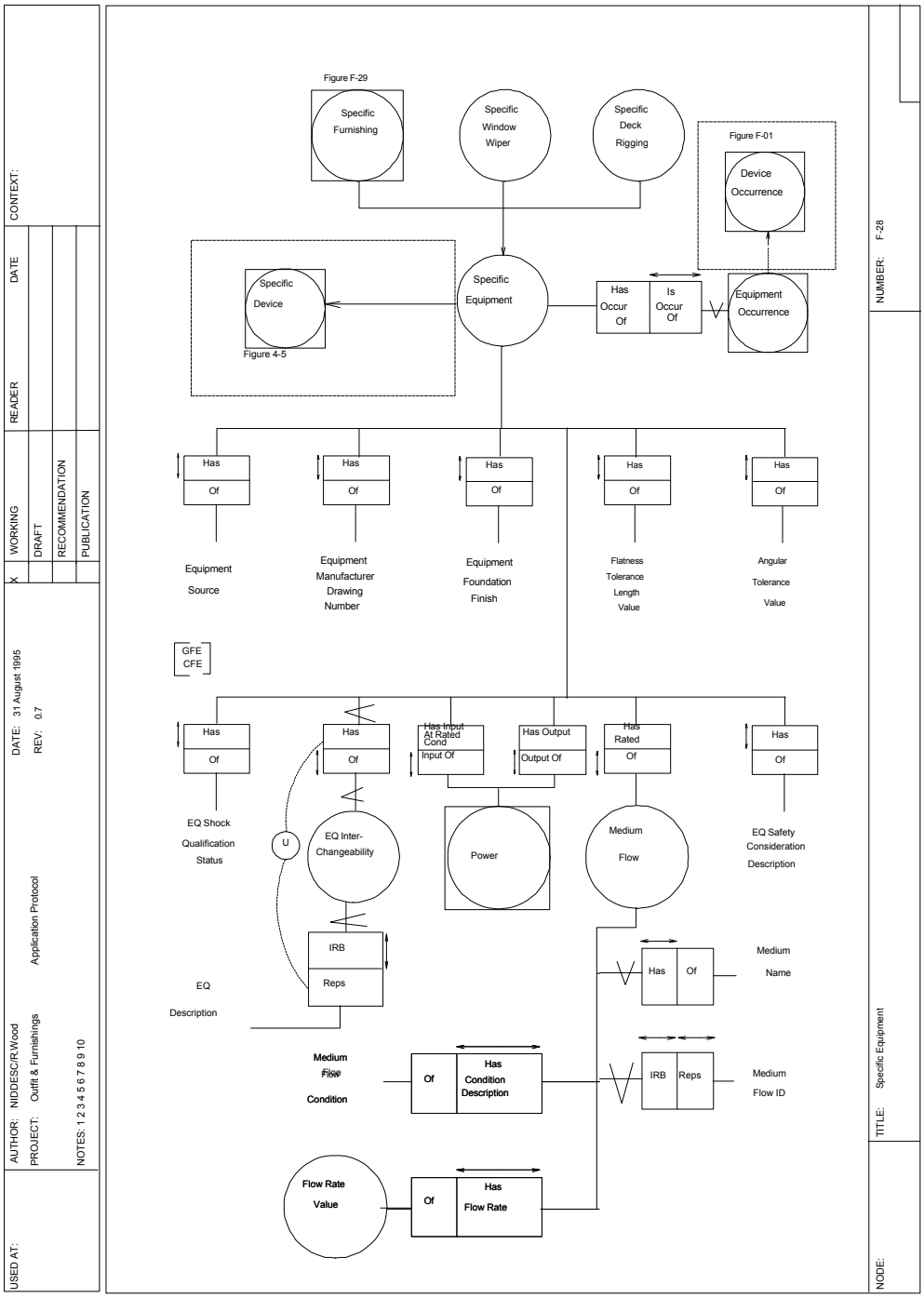

Figure F. 28 Specific Equipment

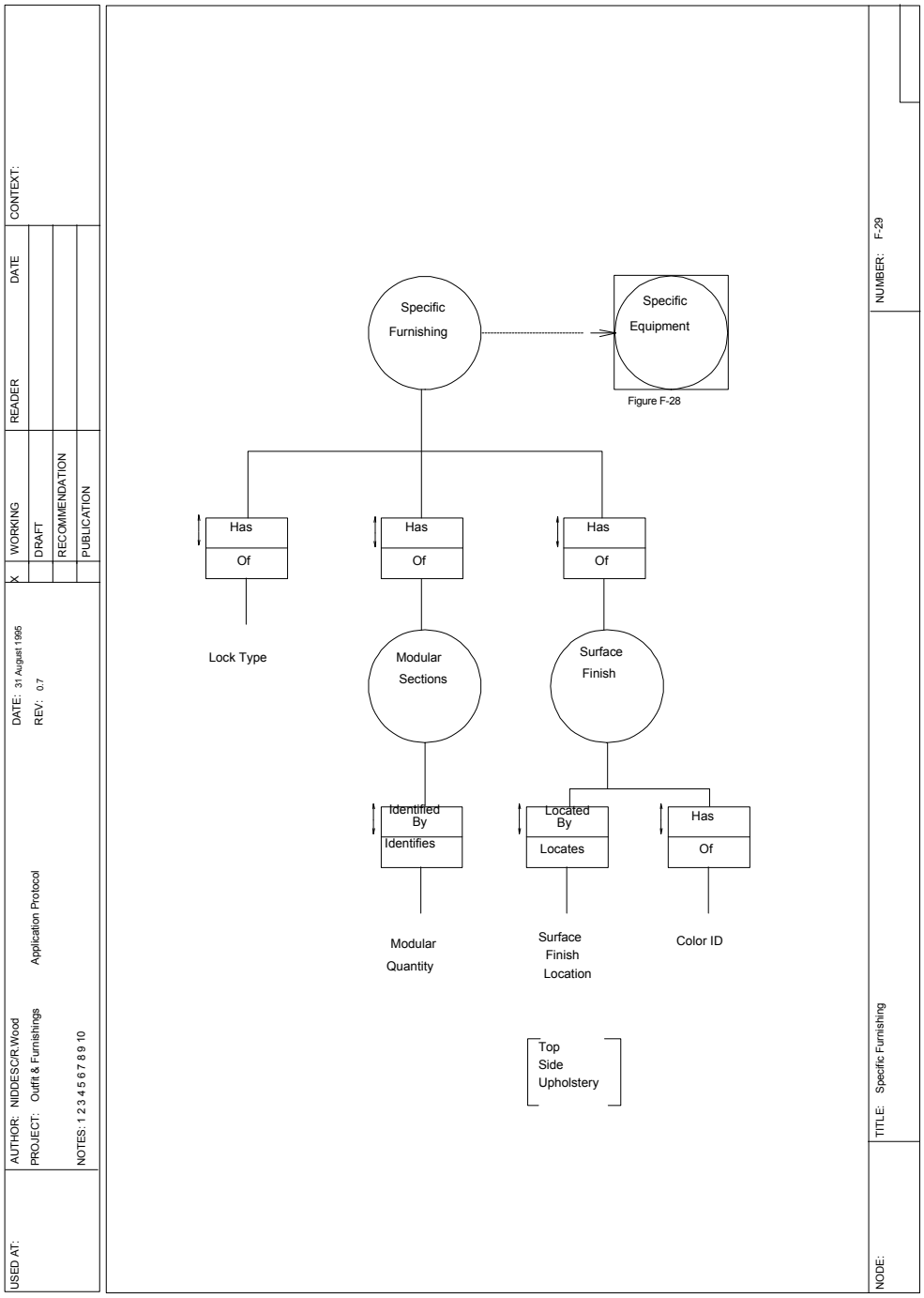

Figure F. 29 Specific Furnishing

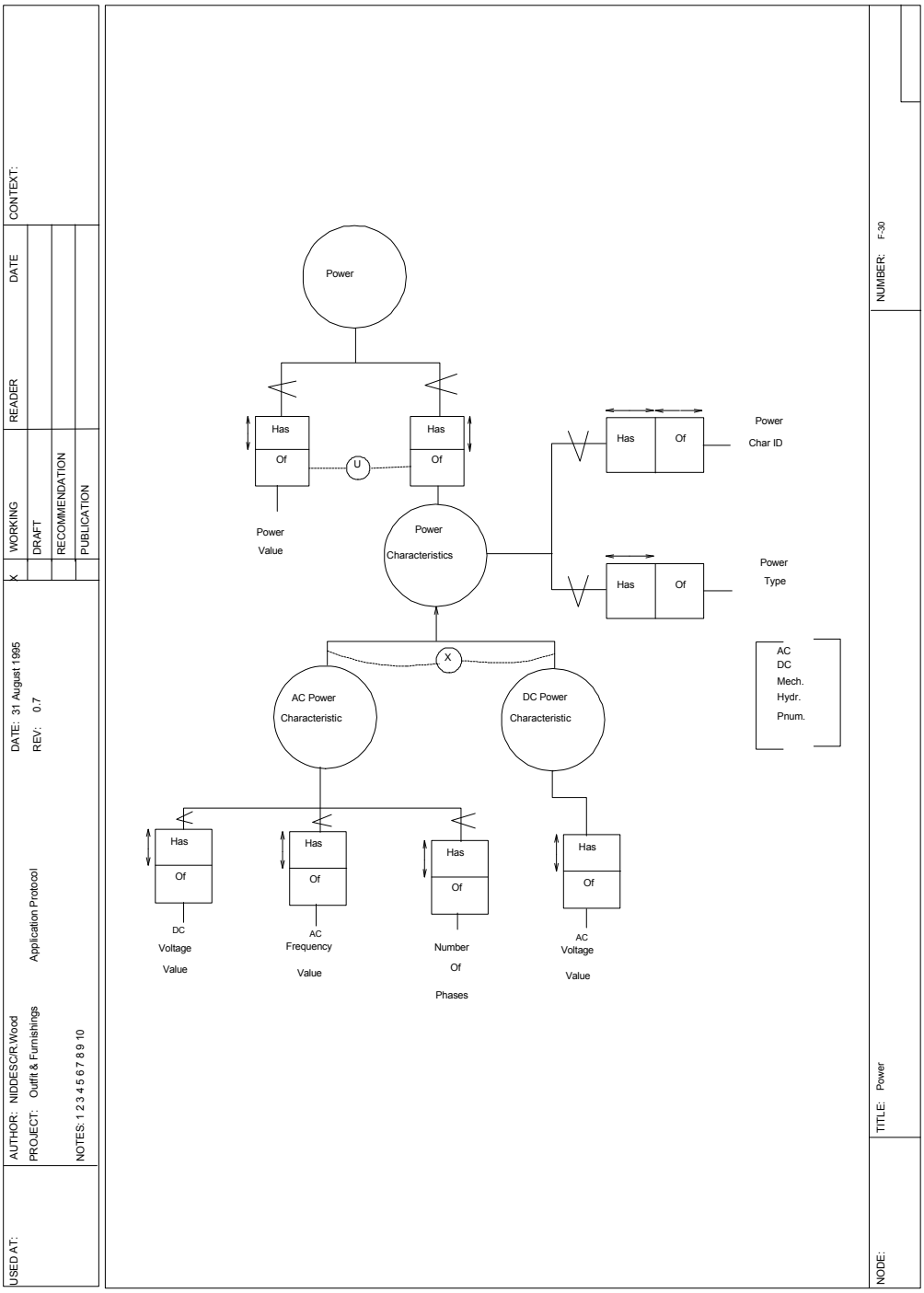

Figure F. 30 Power

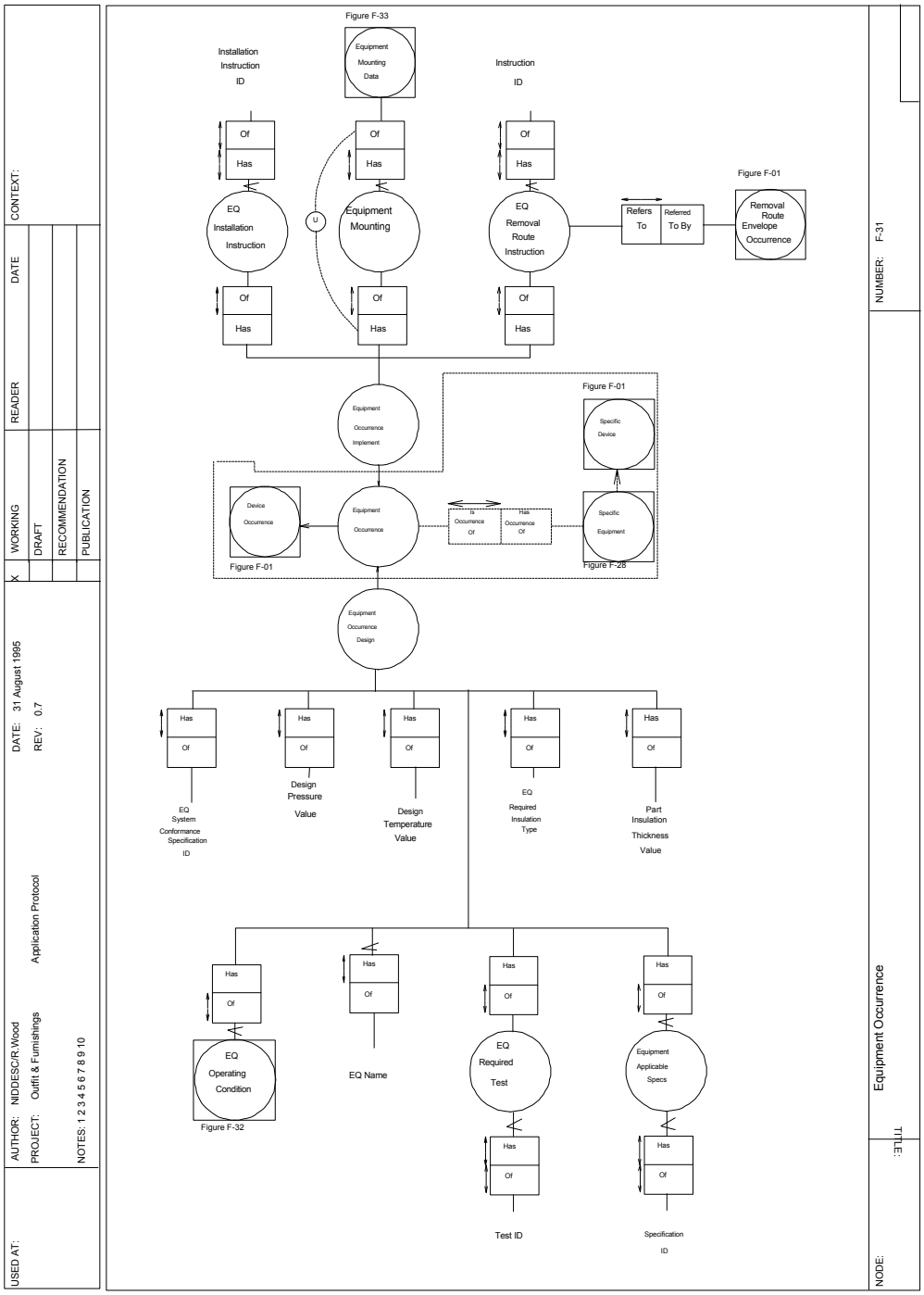

Figure F. 31 Equipment Occurrence

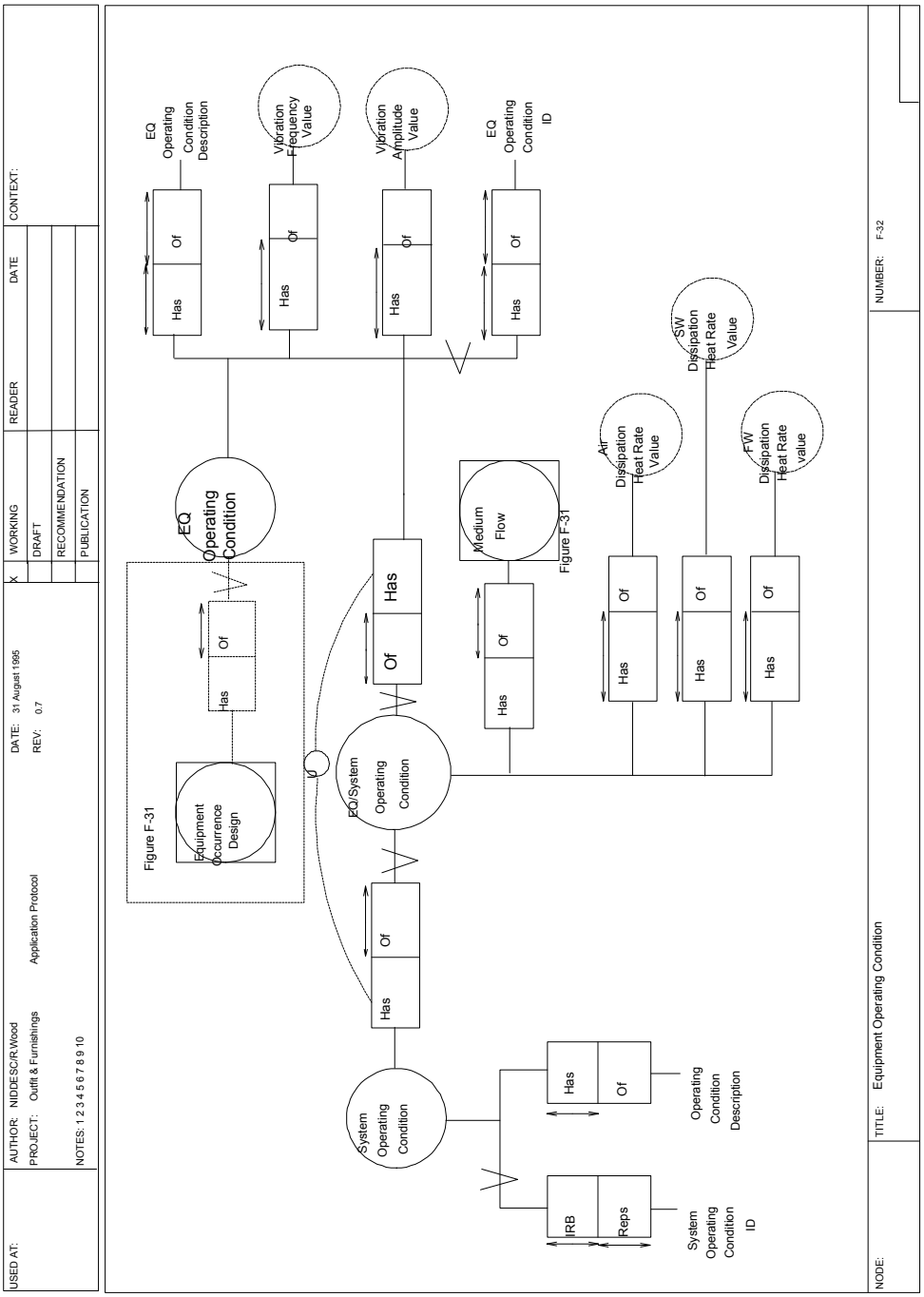

Figure F. 32 Equipment Operating Condition

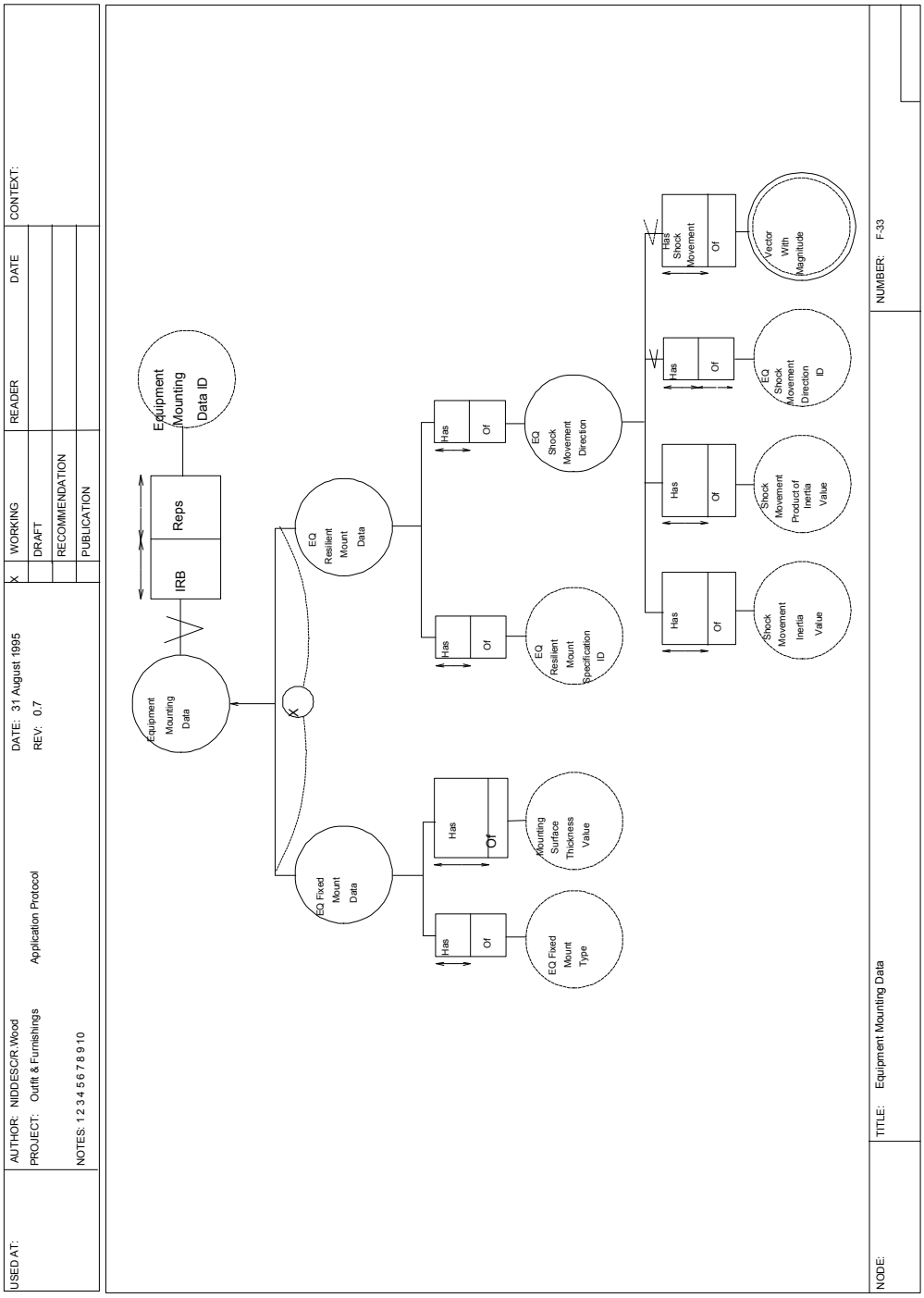

Figure F. 33 Equipment Mounting Data

F.4 O&F Reference Models

The reference models in this section describe product information which defines O&F systems, their components and assemblies made up of their components. In addition, the testing requirements for these systems and assemblies are defined. Of principal interest at this level is the representation of the connectivity of O&F objects. These models in general represent Levels 6 and below of the subtype hierarchy described in Table 0-1.

Models in this section define the logical organization of O&F product information dealing with the following product aspects:

- O&F Systems structure and attributes (Figure F-34)
- O&F Interconnection (Figure F-35)
- O&F test information (Figures F-36 through F-42)
- The information structure and attributes of O&F joints (Figures F-43 and F-44)
- The attributes of O&F assemblies (Figures F-45 and F-46)
- The structure and attributes of ship compartments as required by O&F applications (Figure F-47)
- The attributes and subtypes of Protective Coating (Figure F-48)
- The attributes and subtypes of Nonstructural Bulkheads (Figure F-49)
- The attributes and subtypes of Ladders (Figure F-71 through F-56)
- The attributes and subtypes of Deck Covering (Figure F-57)
- The attributes and subtypes of Grating (Figure F-58)
- The attributes and subtypes of Floor Plates (Figure F-59)
- The attributes and subtypes of Handrails (Figure F-60)
- The attributes of Ceiling System (Figure F-50)
- The attributes of False Decks (Figure 4-51)
- The attributes of Doors (Figure 4-61)

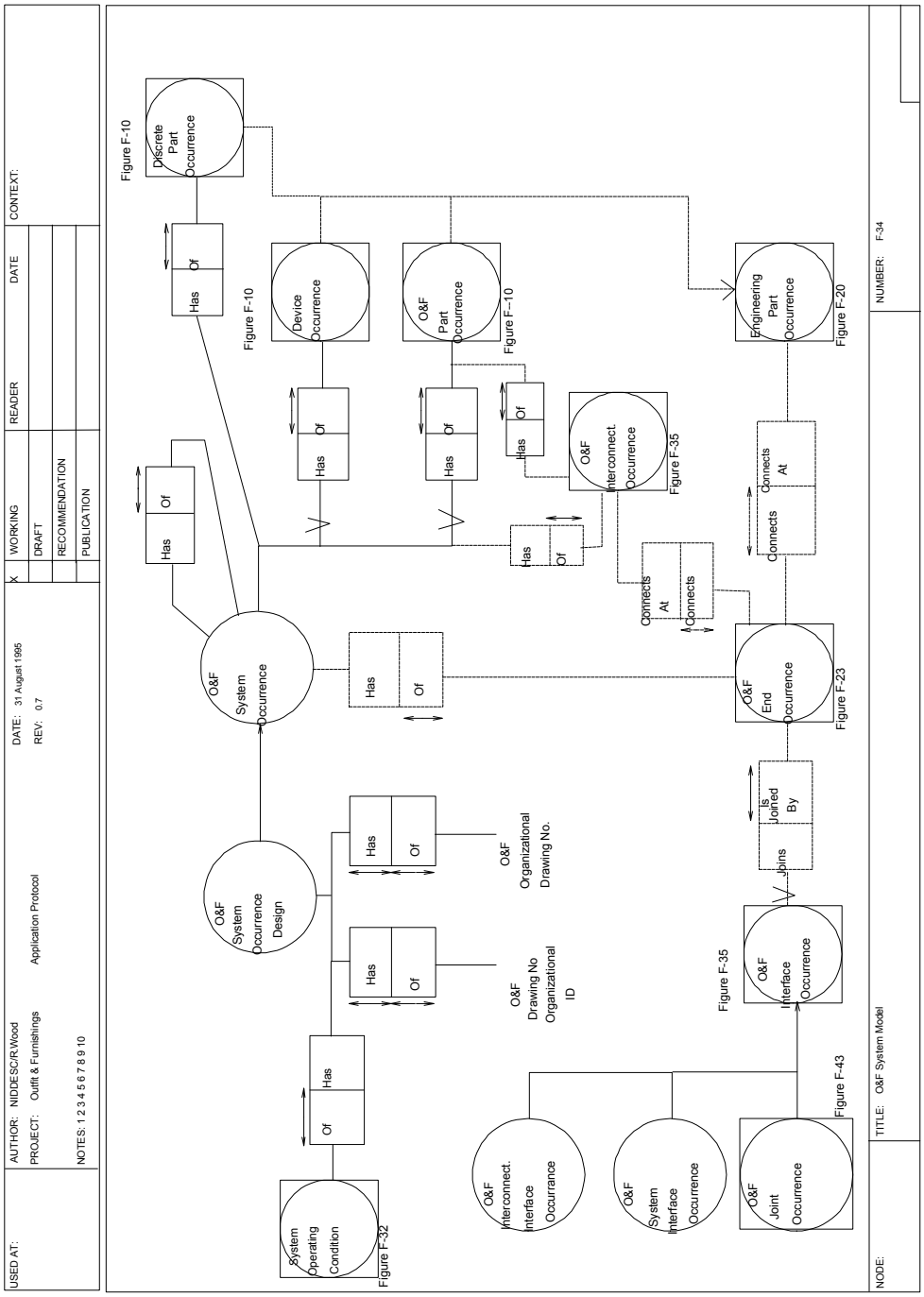

Figure F. 34 O&F System Model

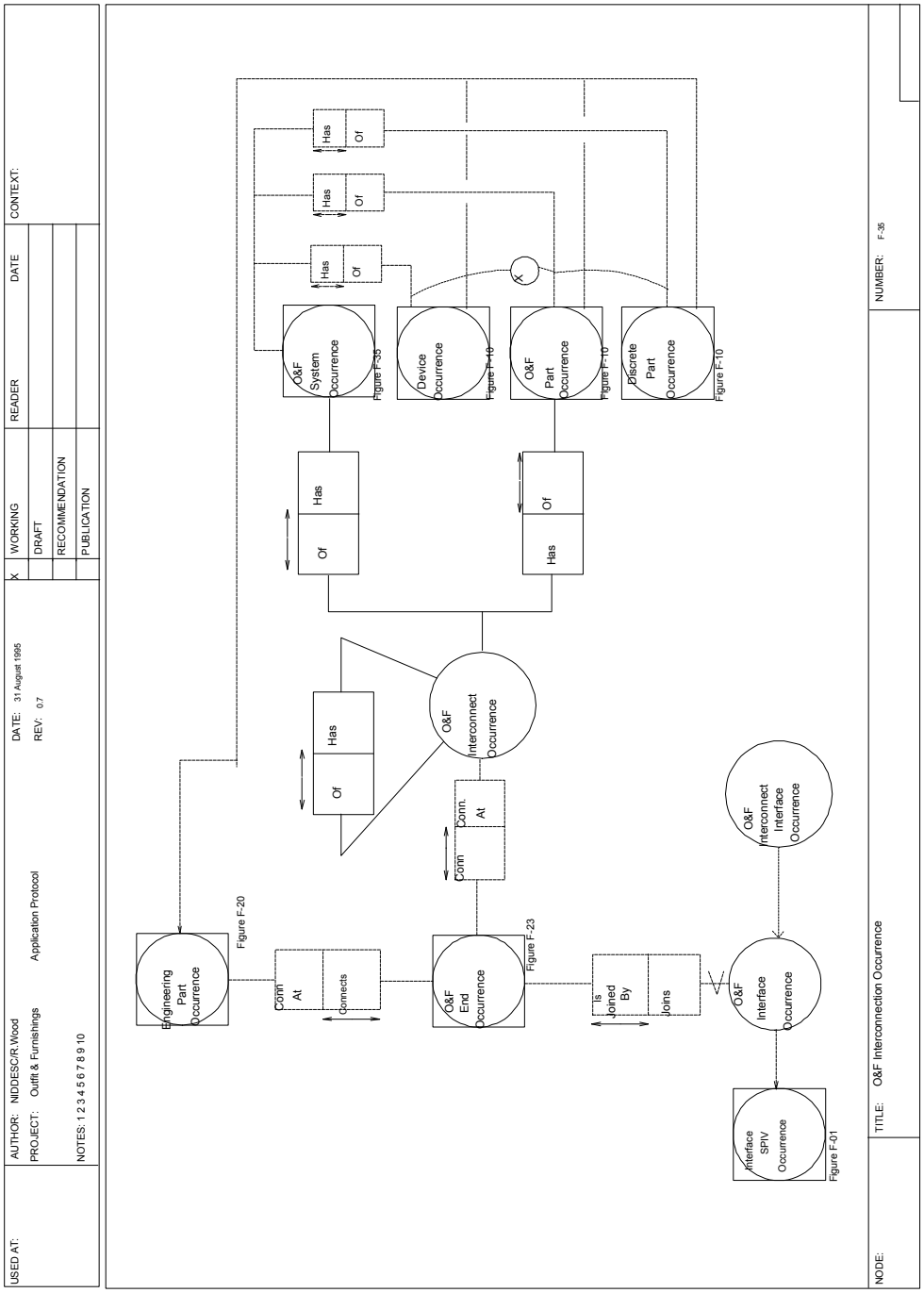

Figure F. 35 O&F Interconnection Occurrence

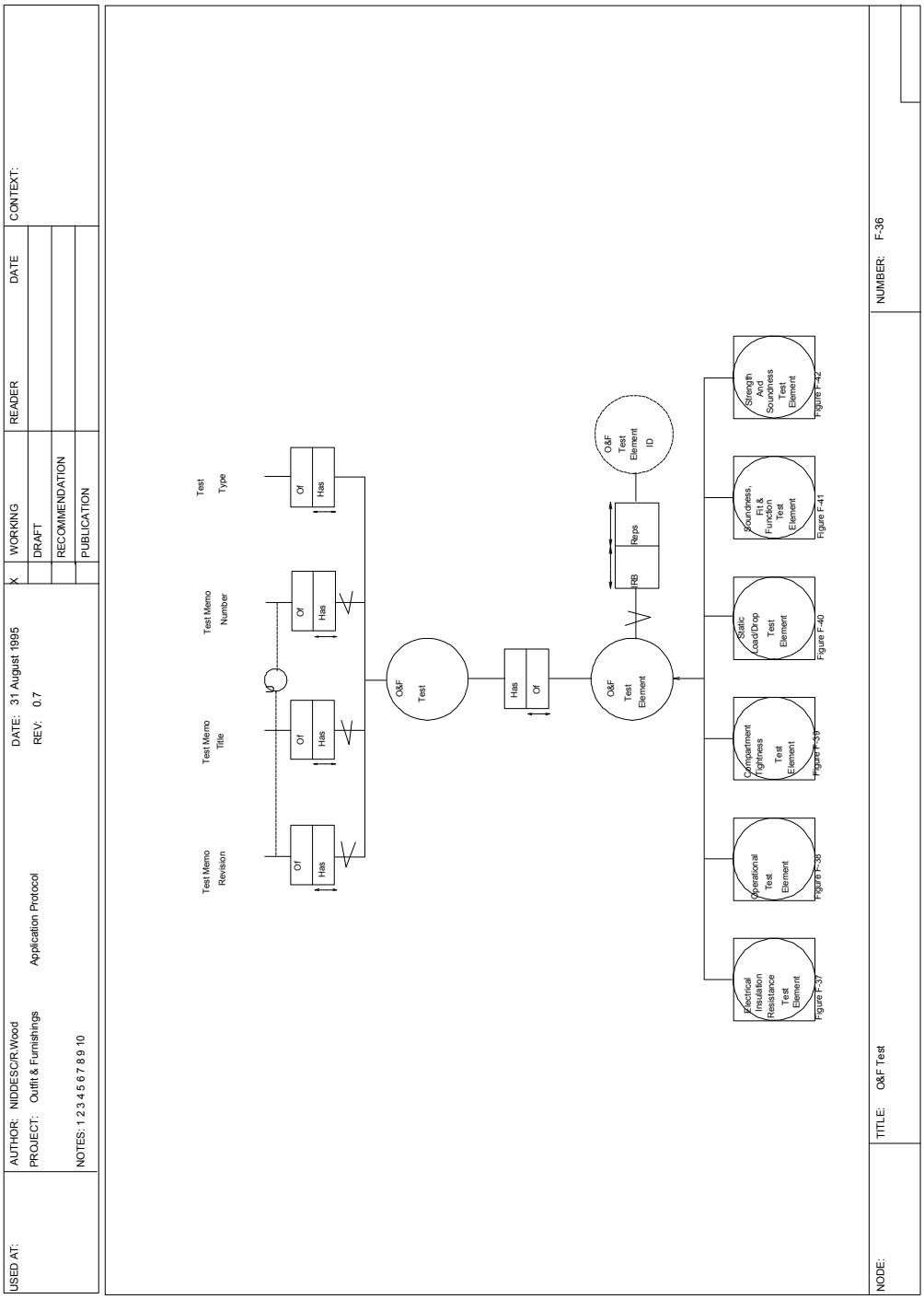

Figure F. 36 O&F Test

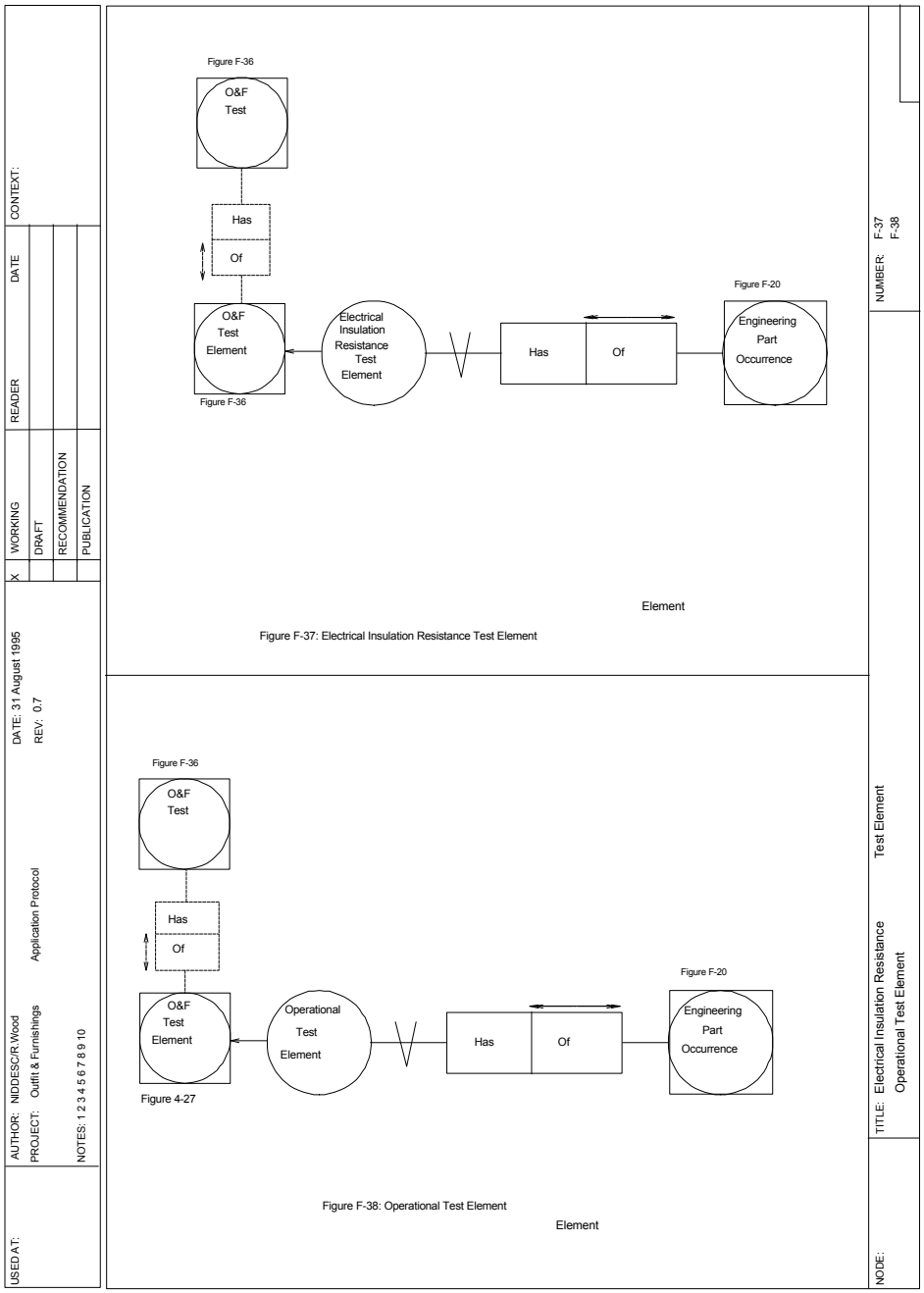

Figure F. 37 Electrical Insullation Resistance Test Element

Figure F. 38 Operational Test Element

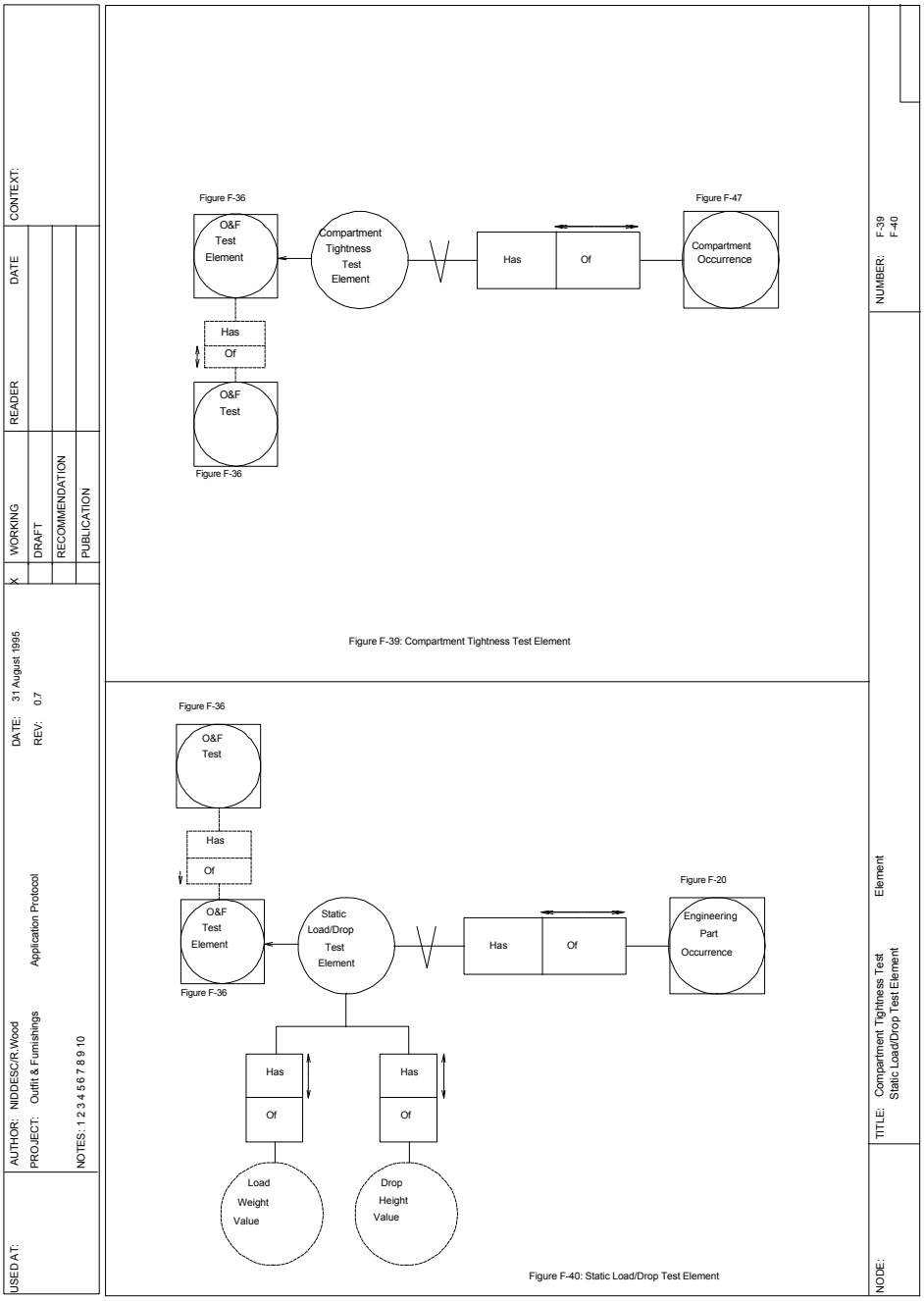

Figure F. 39 Compartment Tightness Test Element

Figure F. 40 Static Load/Drop Test Element

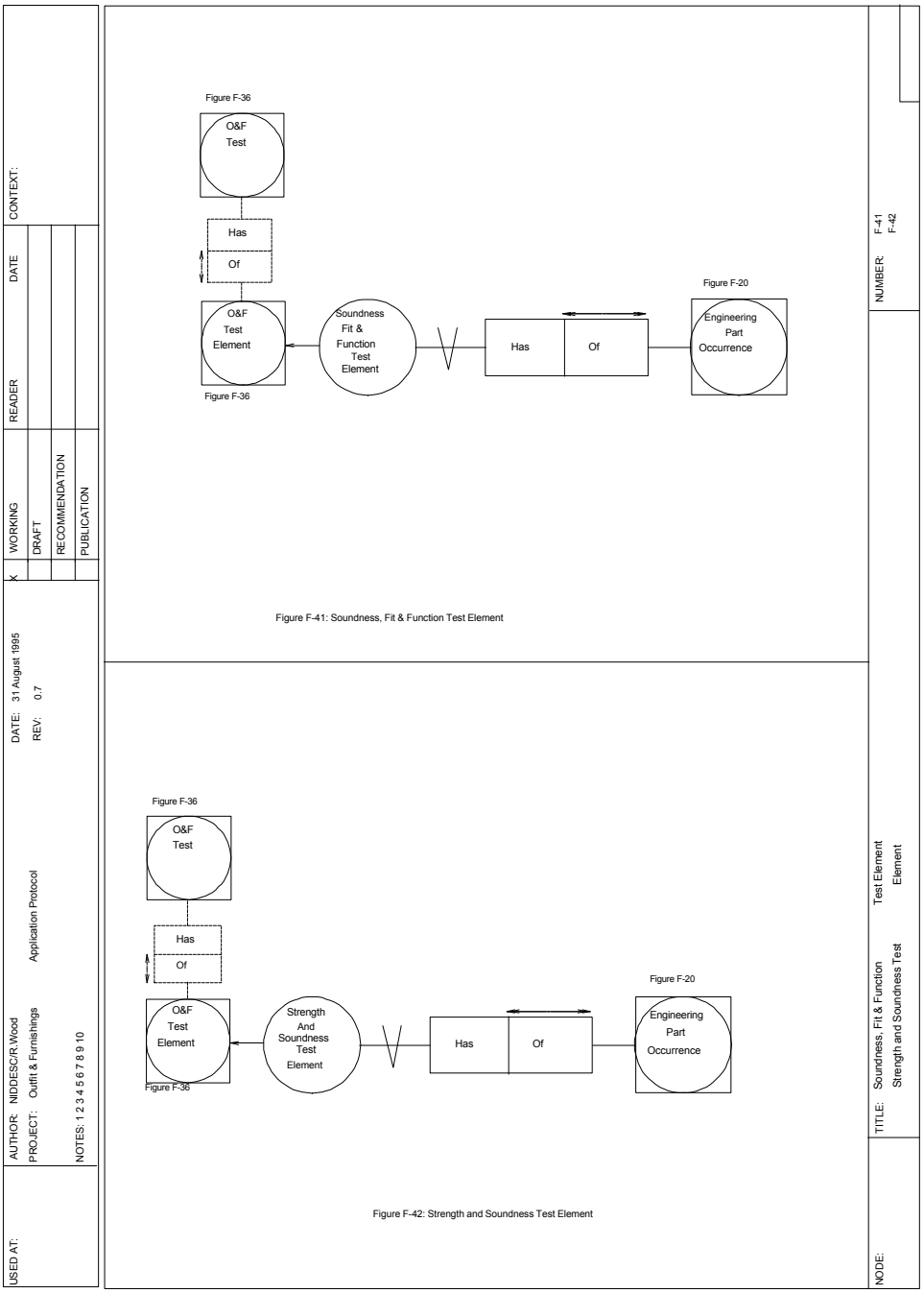

Figure F. 41 Soundness, Fit & Function Test Element

Figure F. 42 Strength and Soundness Test Element

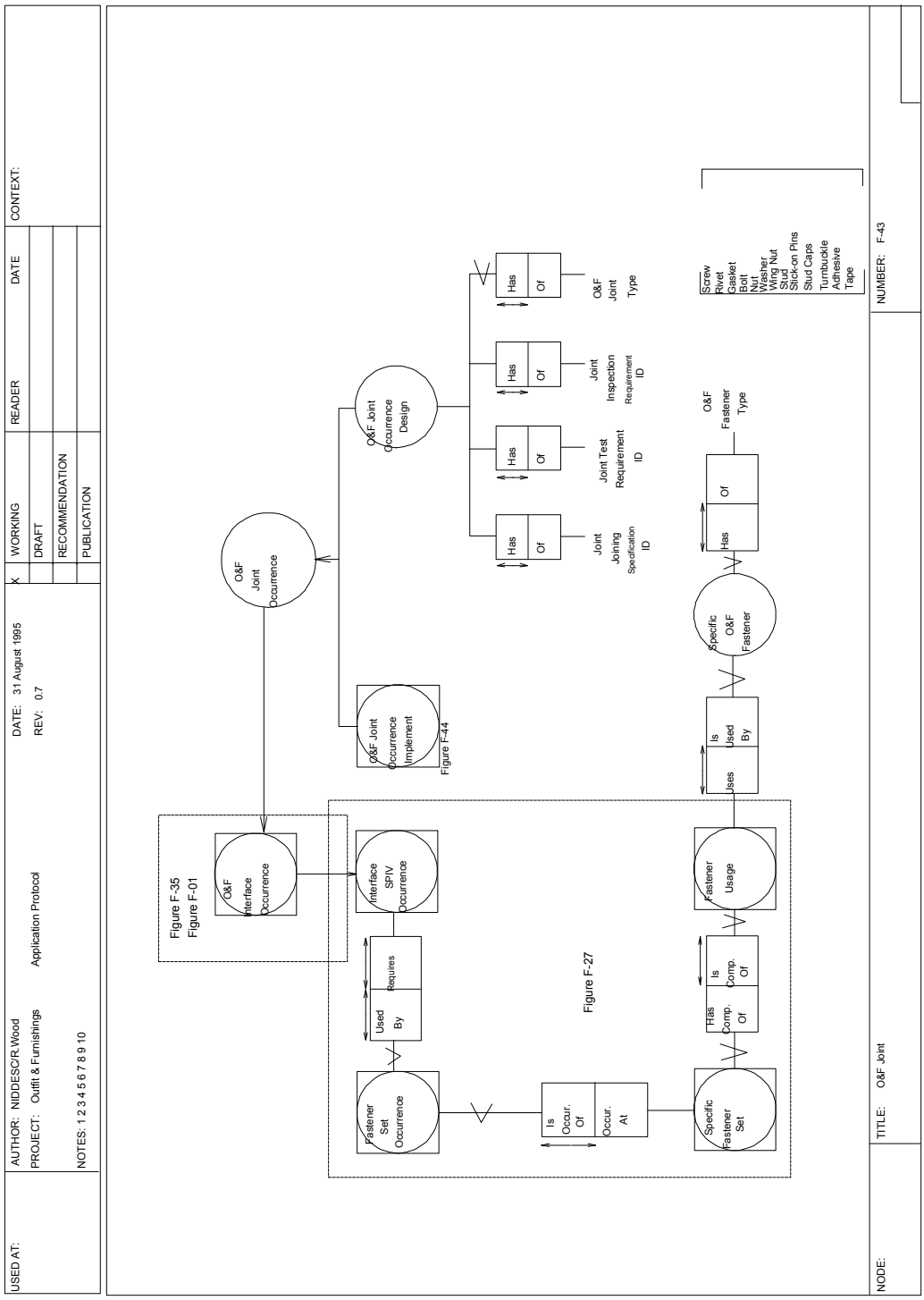

Figure F. 43 O&F Joint

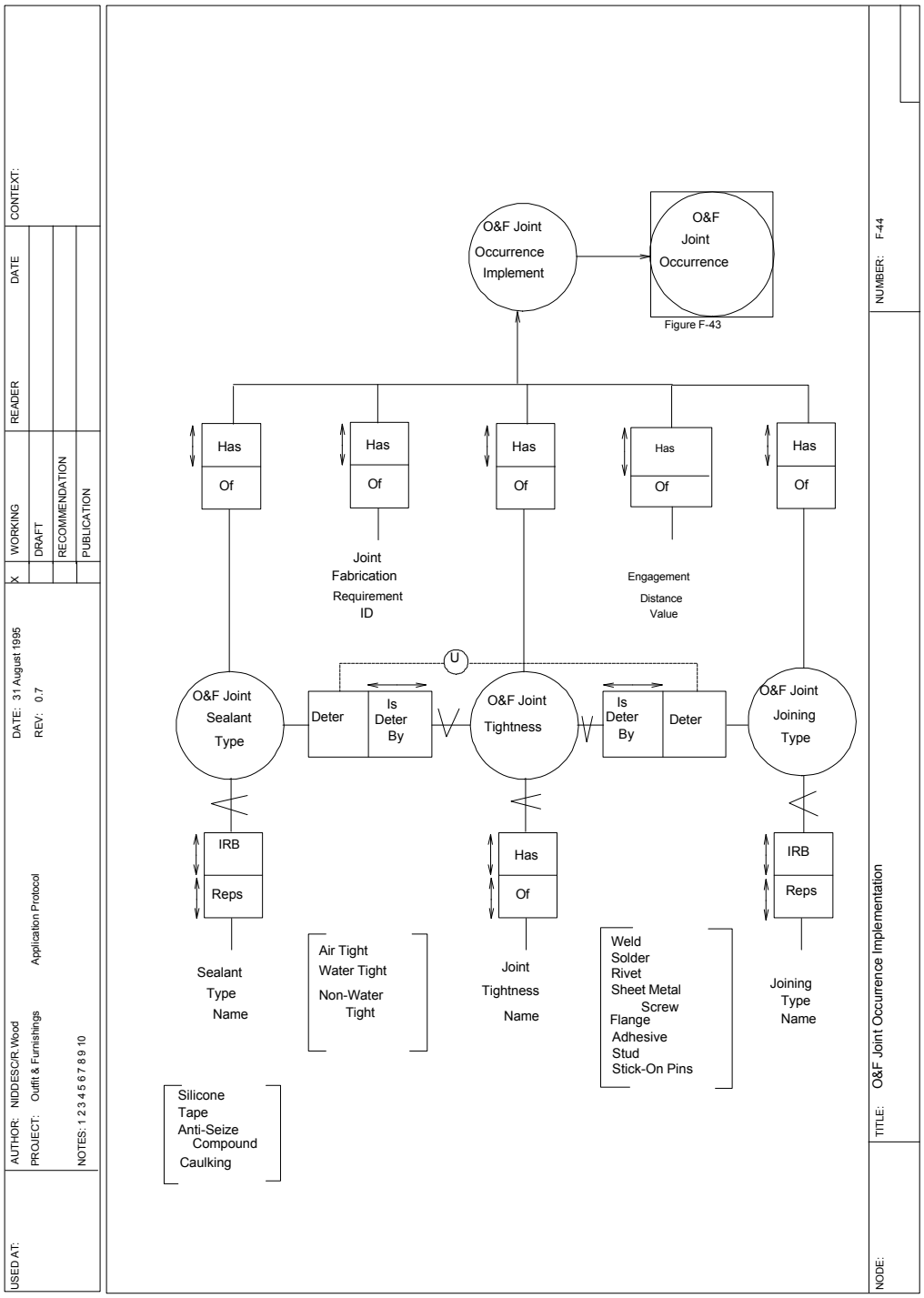

Figure F. 44 O&F Joint Occurrence Implementation

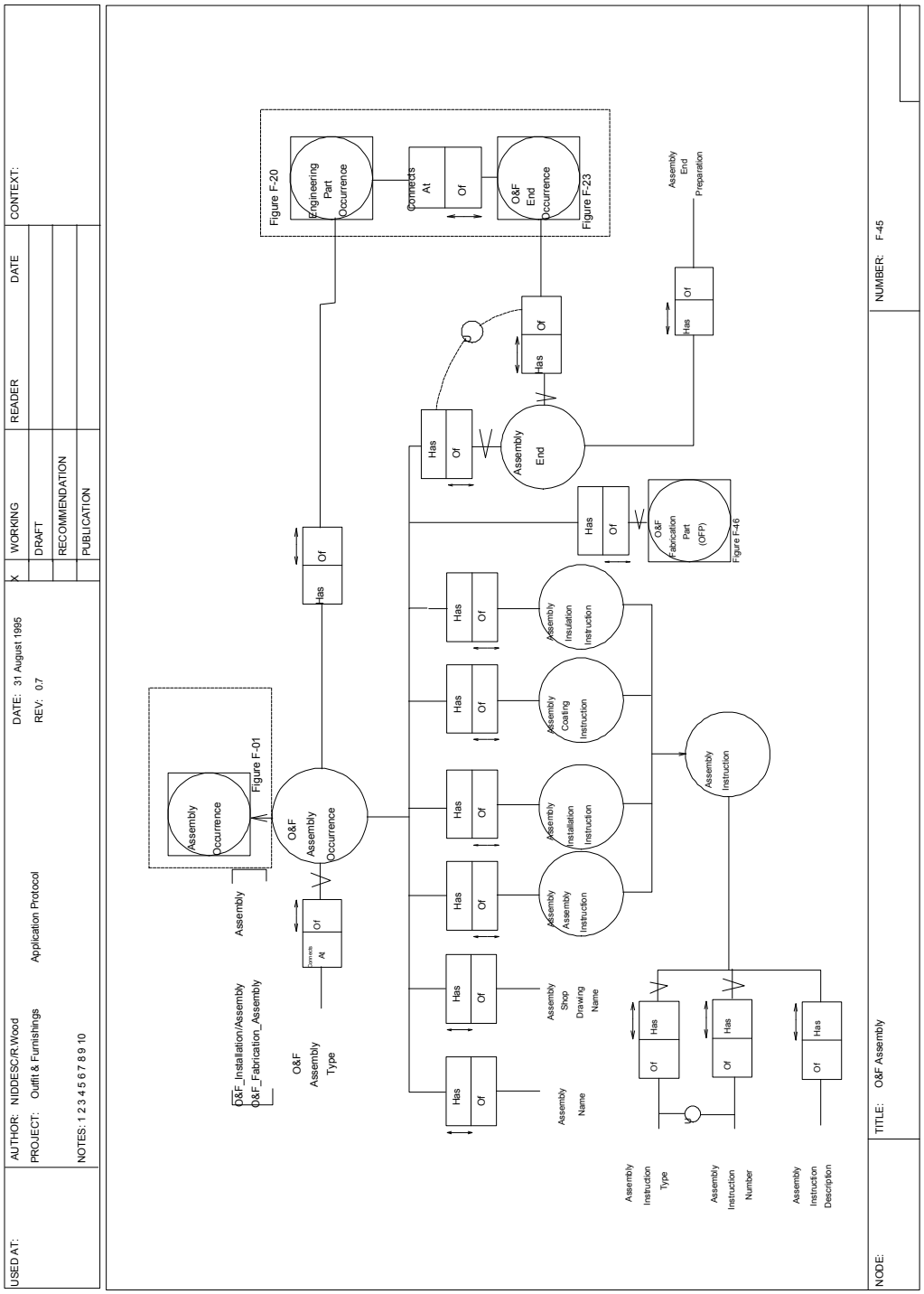

Figure F. 45 O&F Assembly

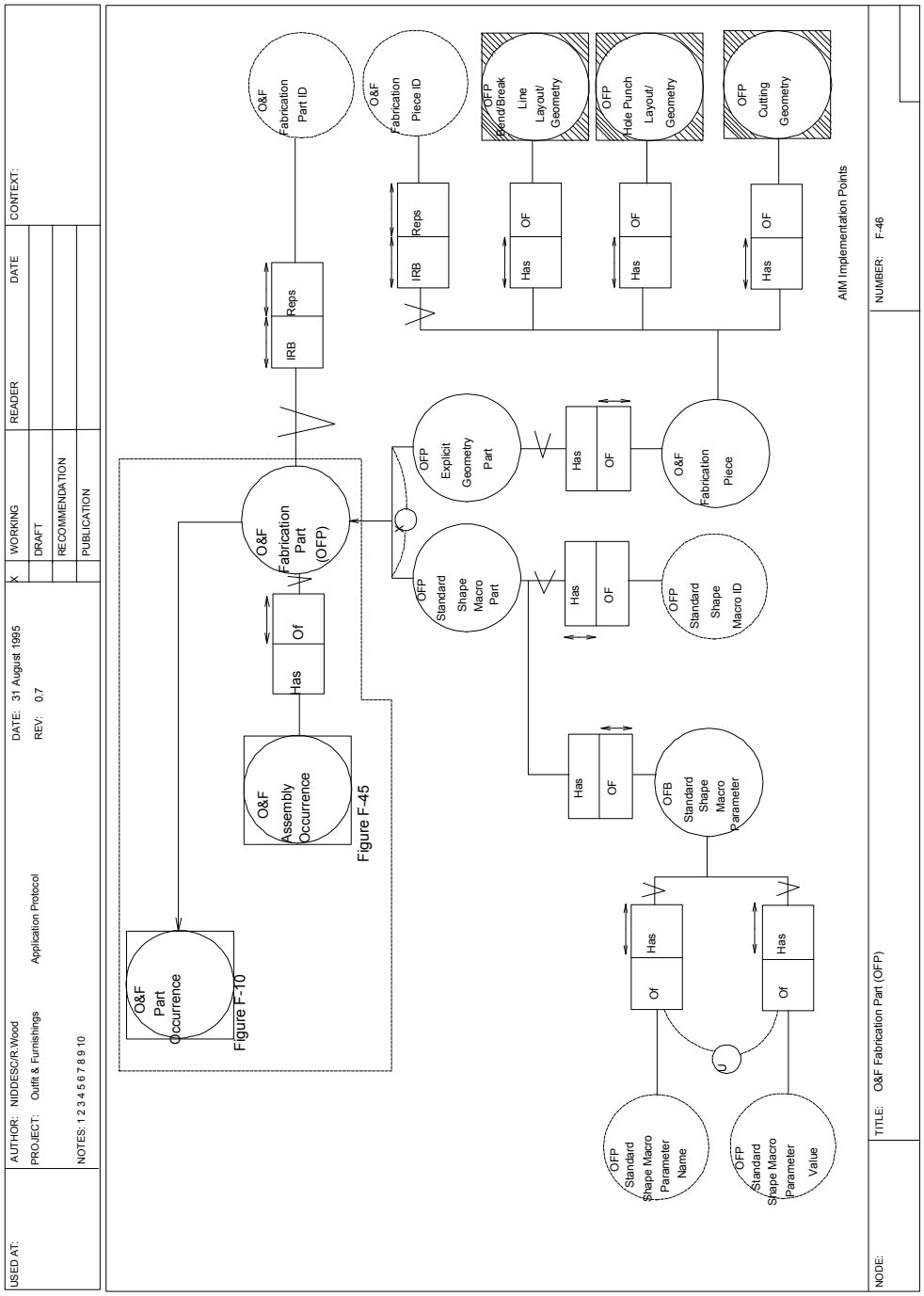

Figure F. 46 O&F Fabrication Part (OFP)

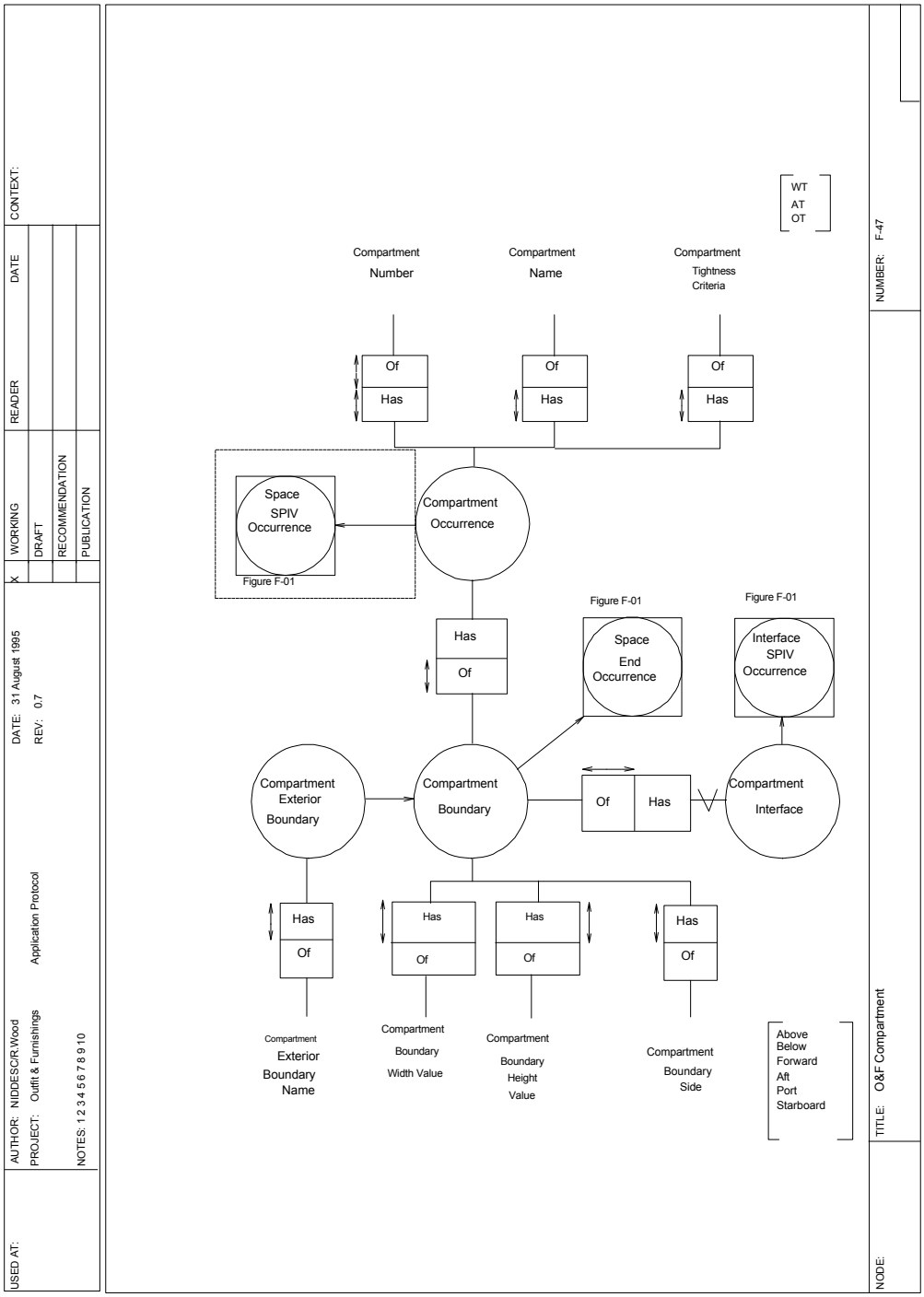

Figure F. 47 O&F Compartment

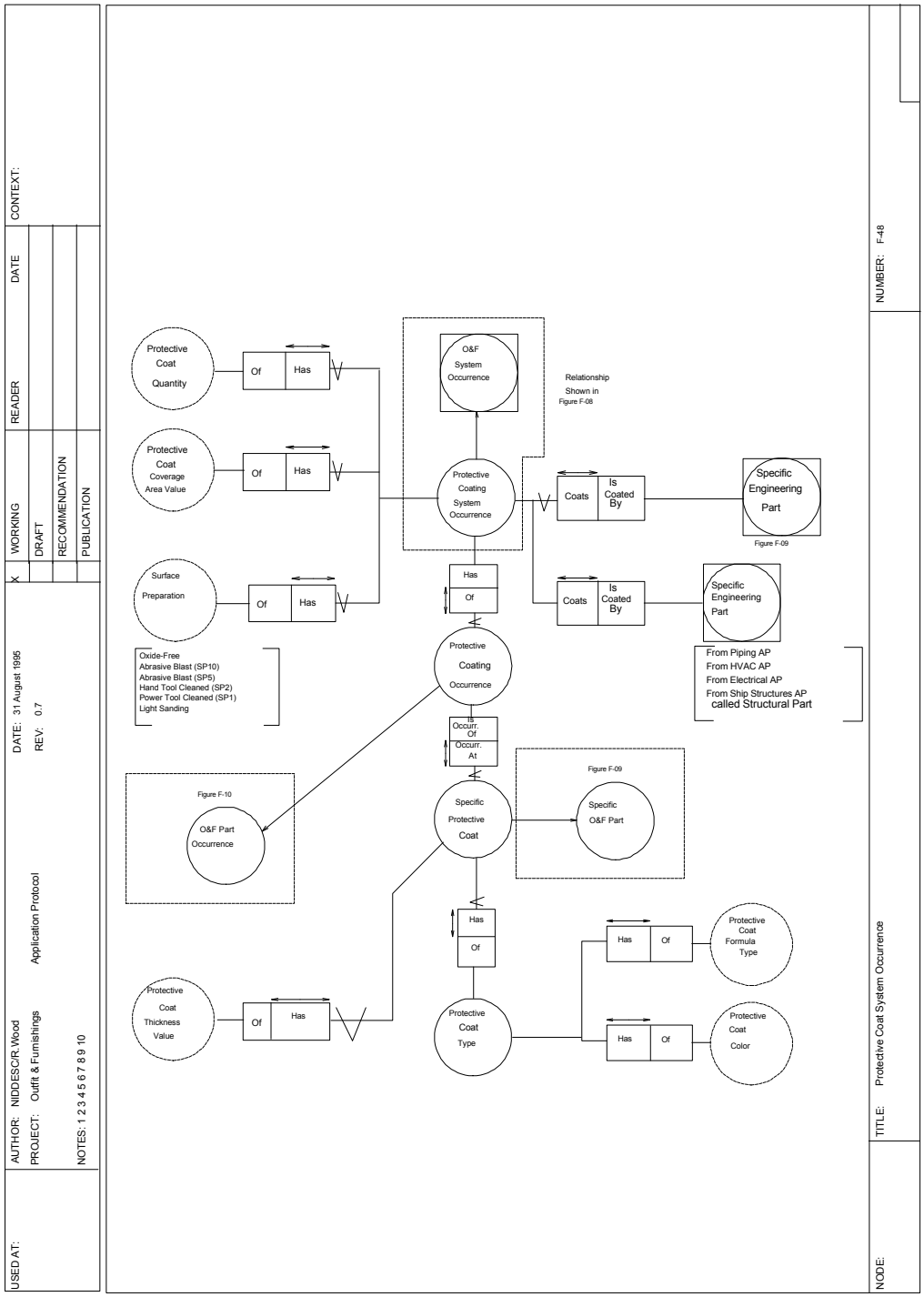

Figure F. 48 Protective Coat System Occurrence

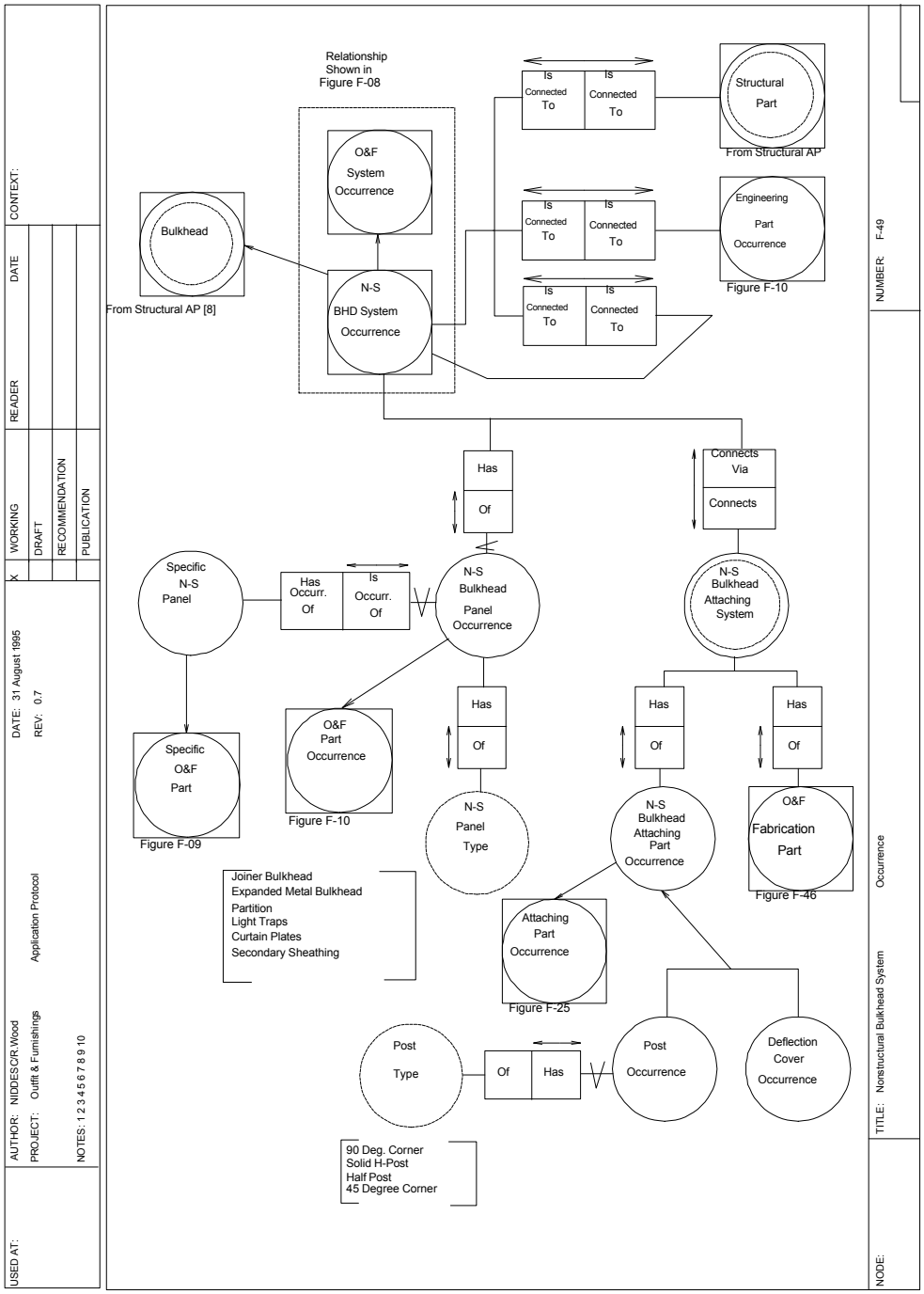

Figure F. 49 Nonstructural Bulkhead System Occurrence

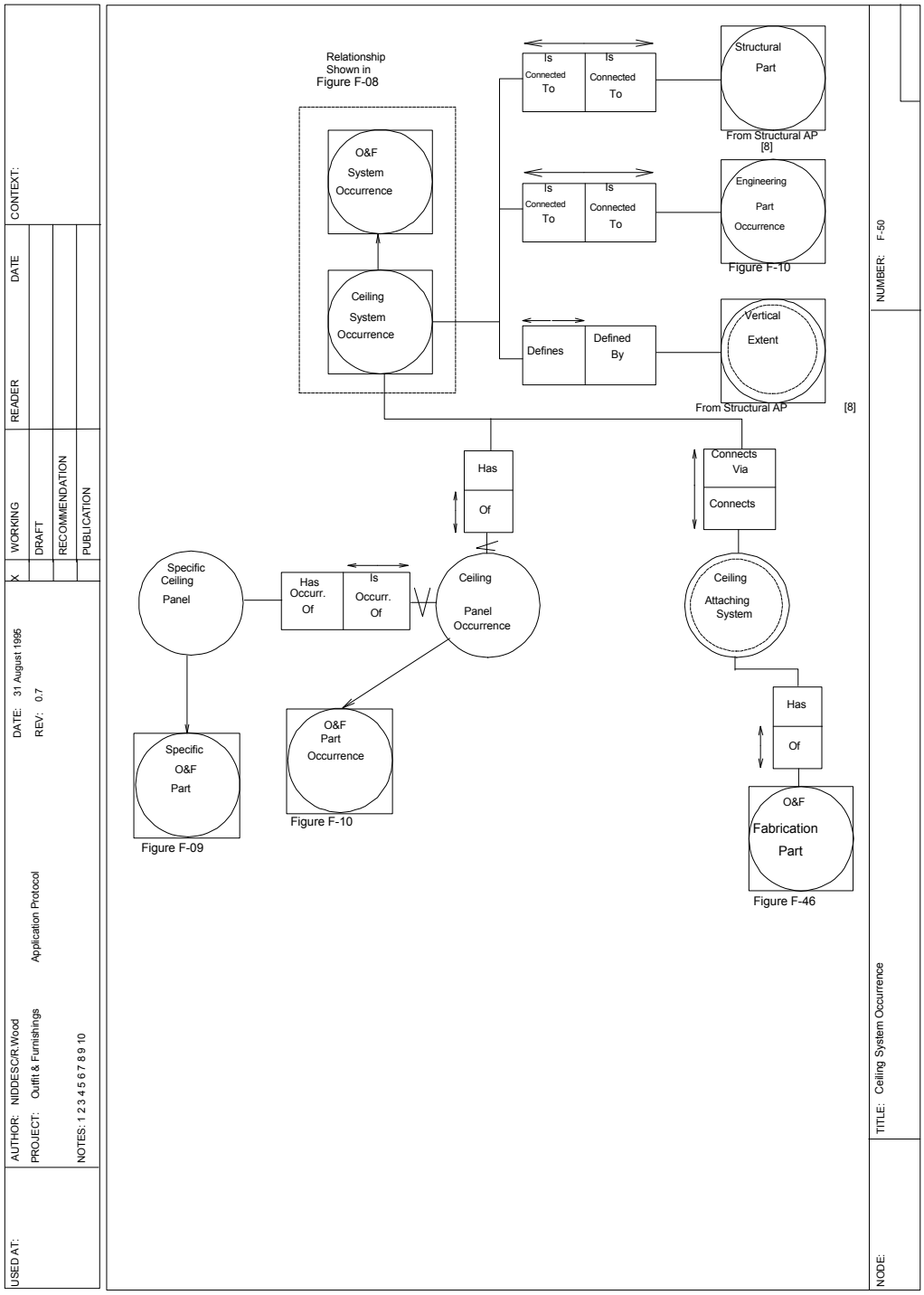

Figure F. 50 Ceiling System Occurrence

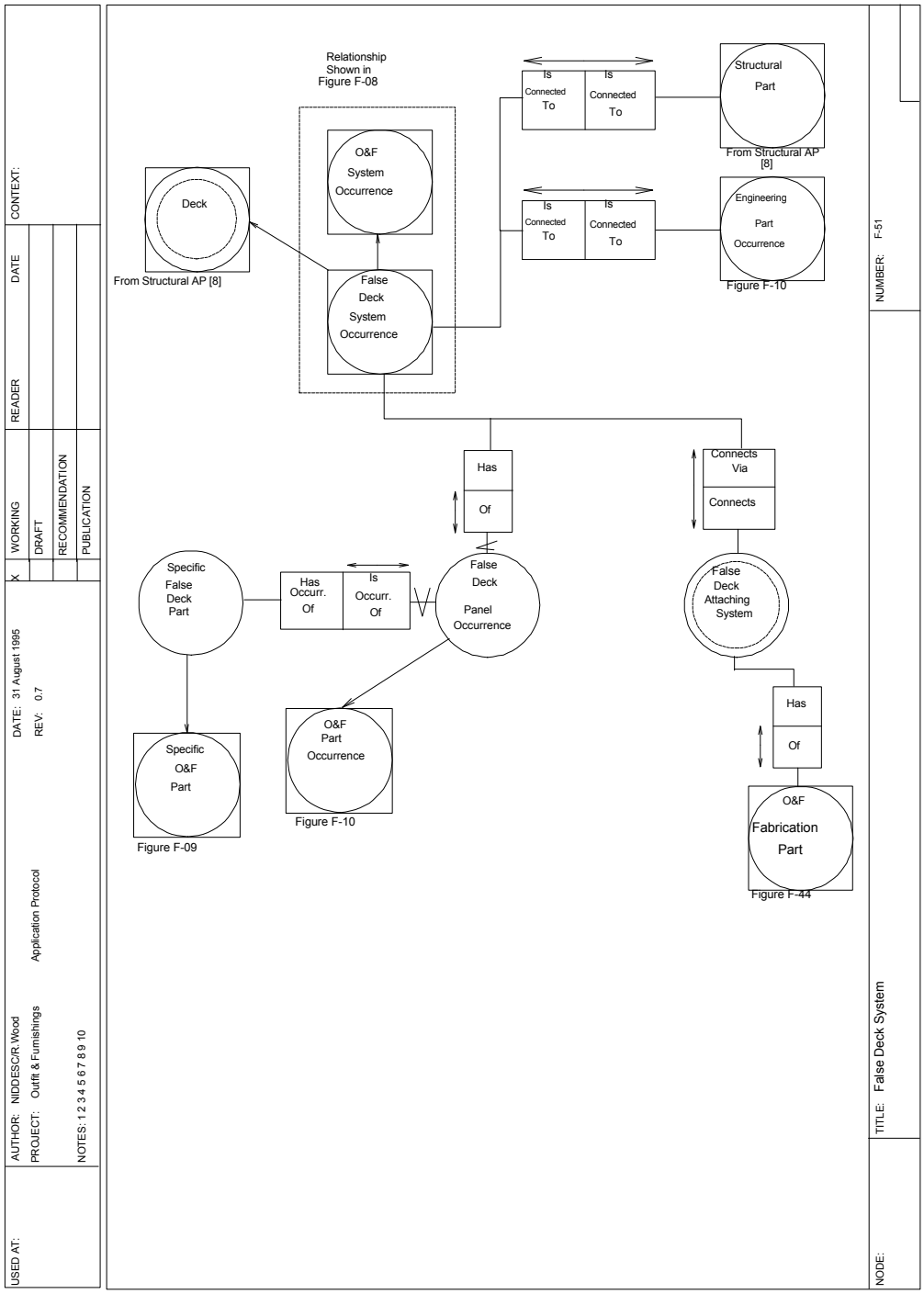

Figure F. 51 False Deck System

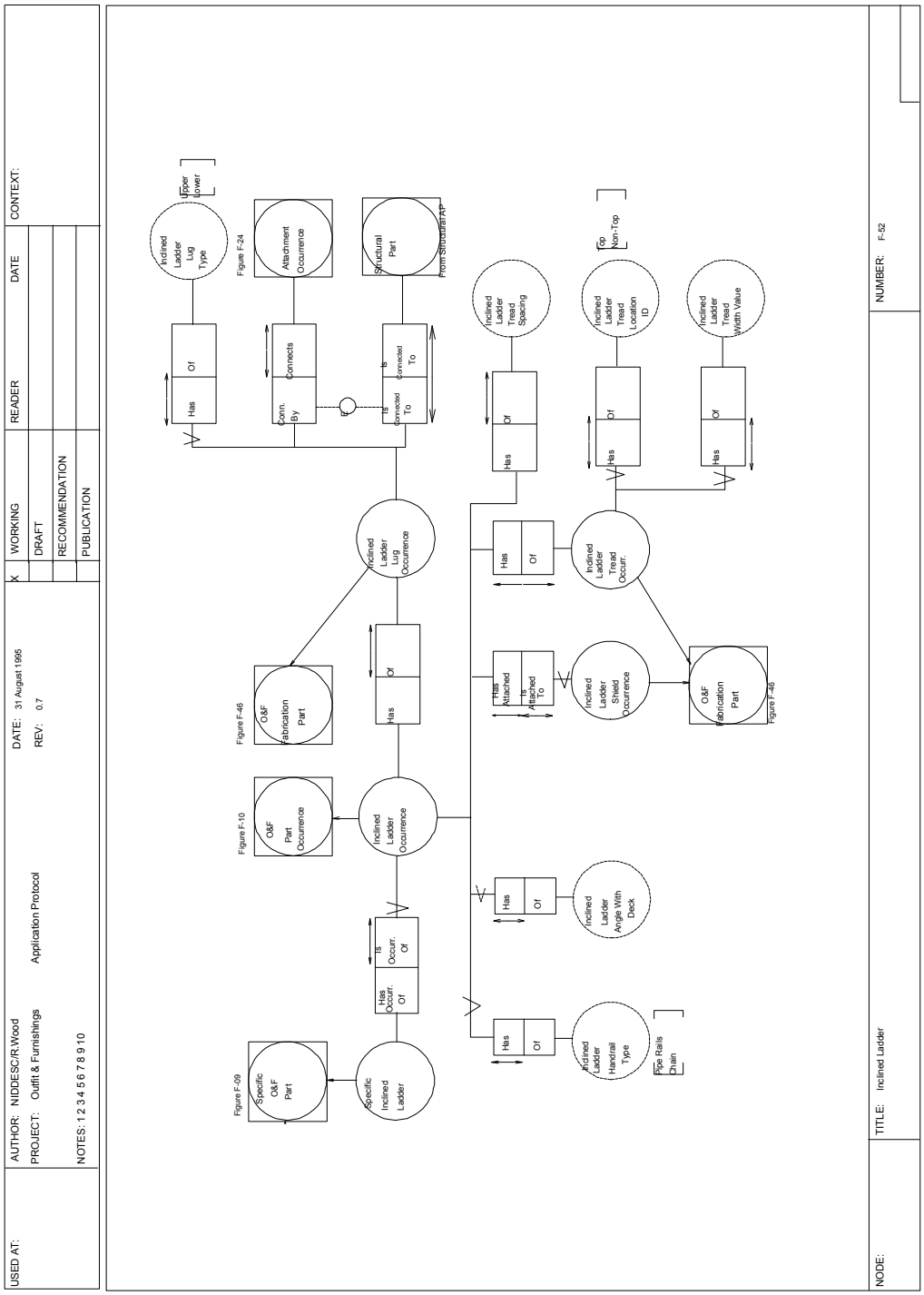

Figure F. 52 Inclined Ladder

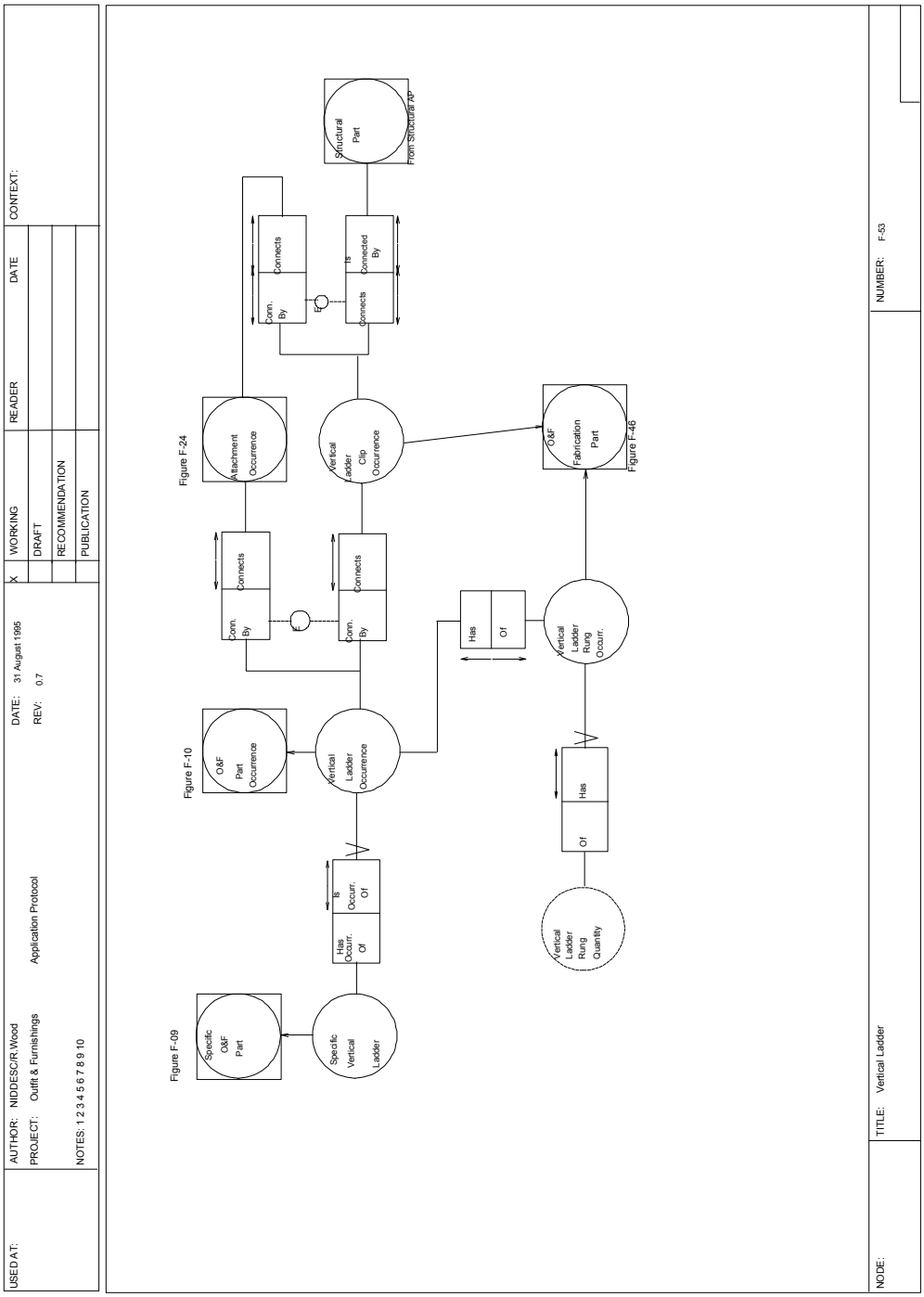

Figure F. 53 Vertical Ladder

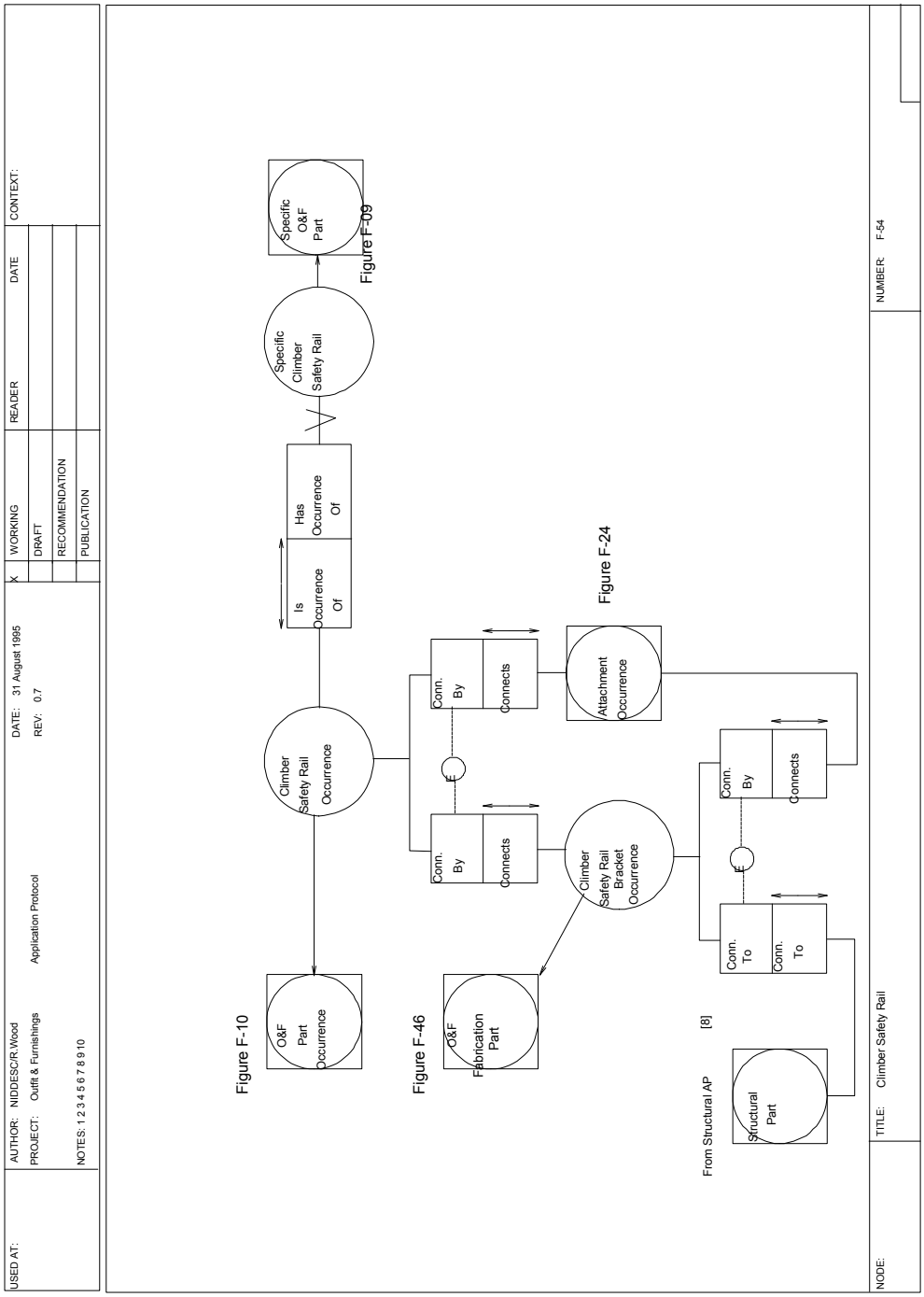

Figure F. 54 Climber Safety Rail

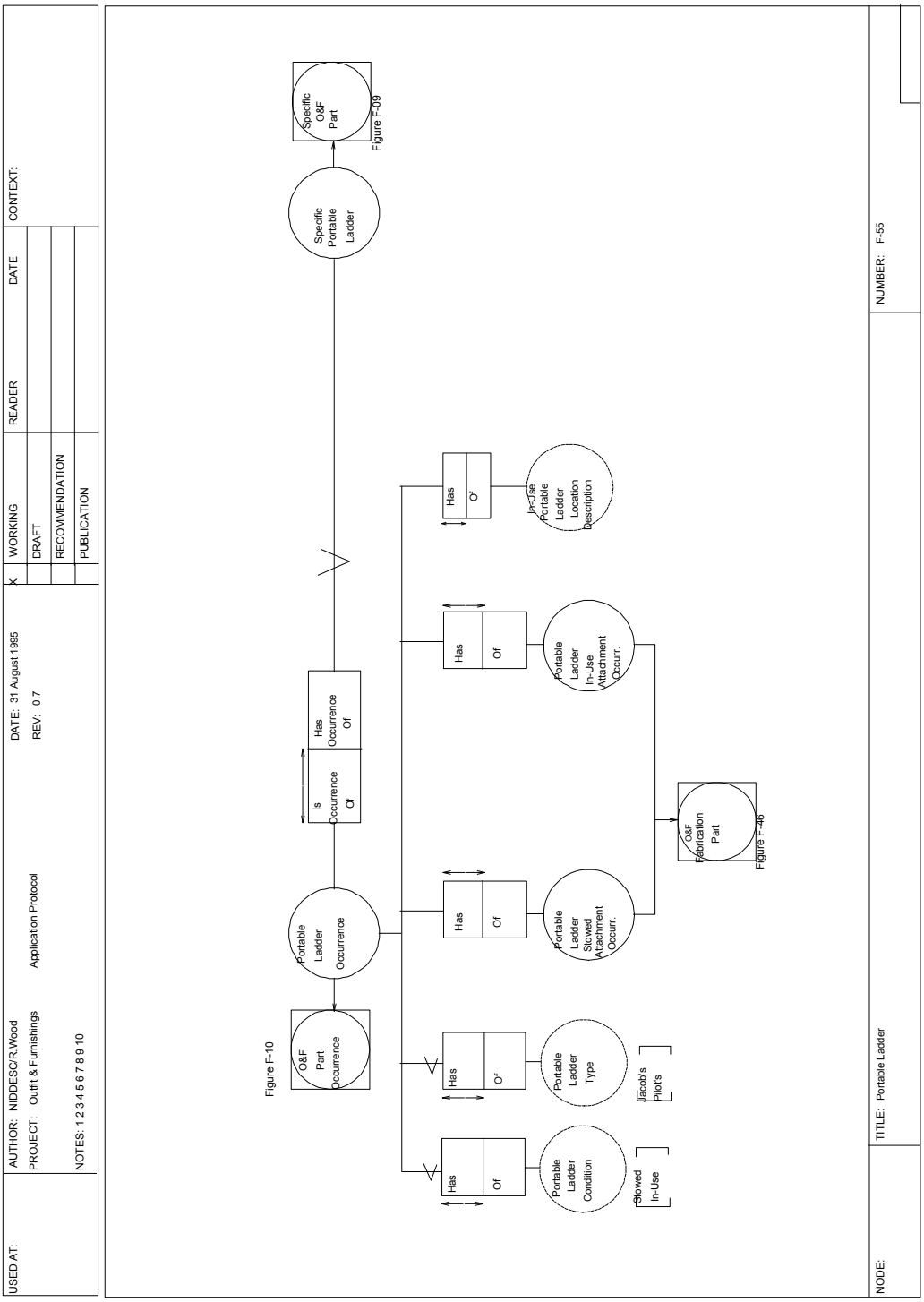

Figure F. 55 Portable Ladder

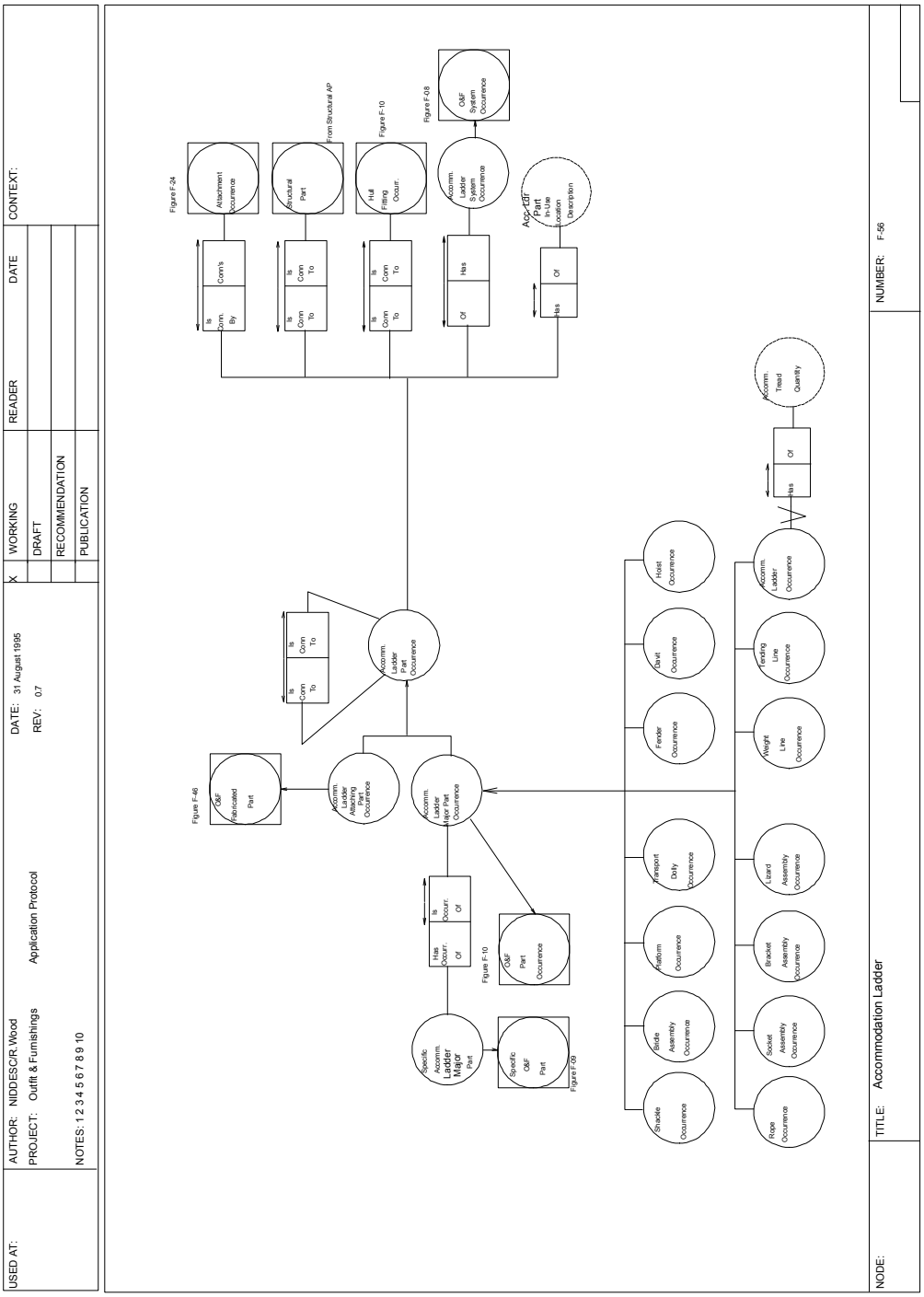

Figure F. 56 Accommodation Ladder

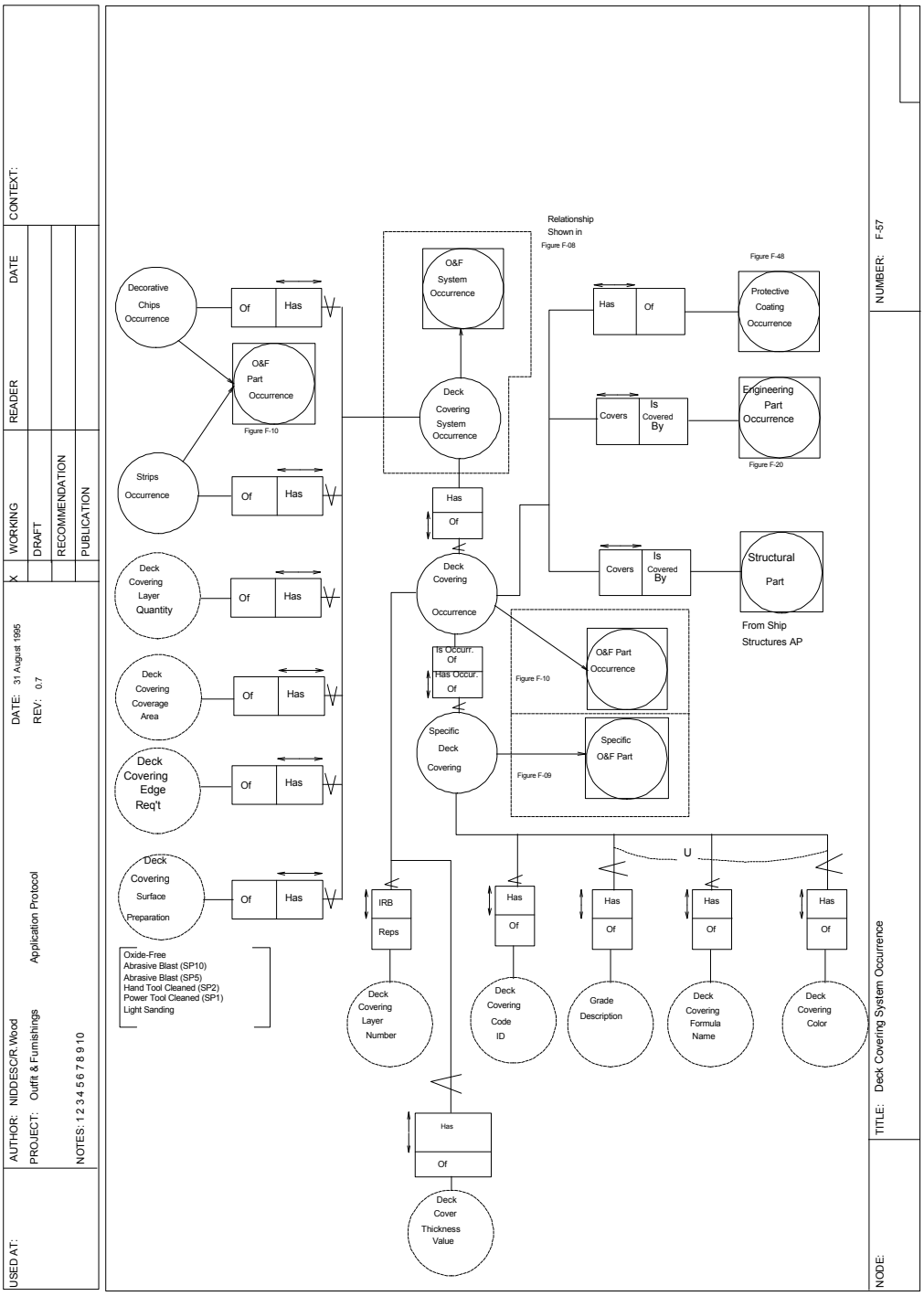

Figure F. 57 Deck Covering System Occurrence

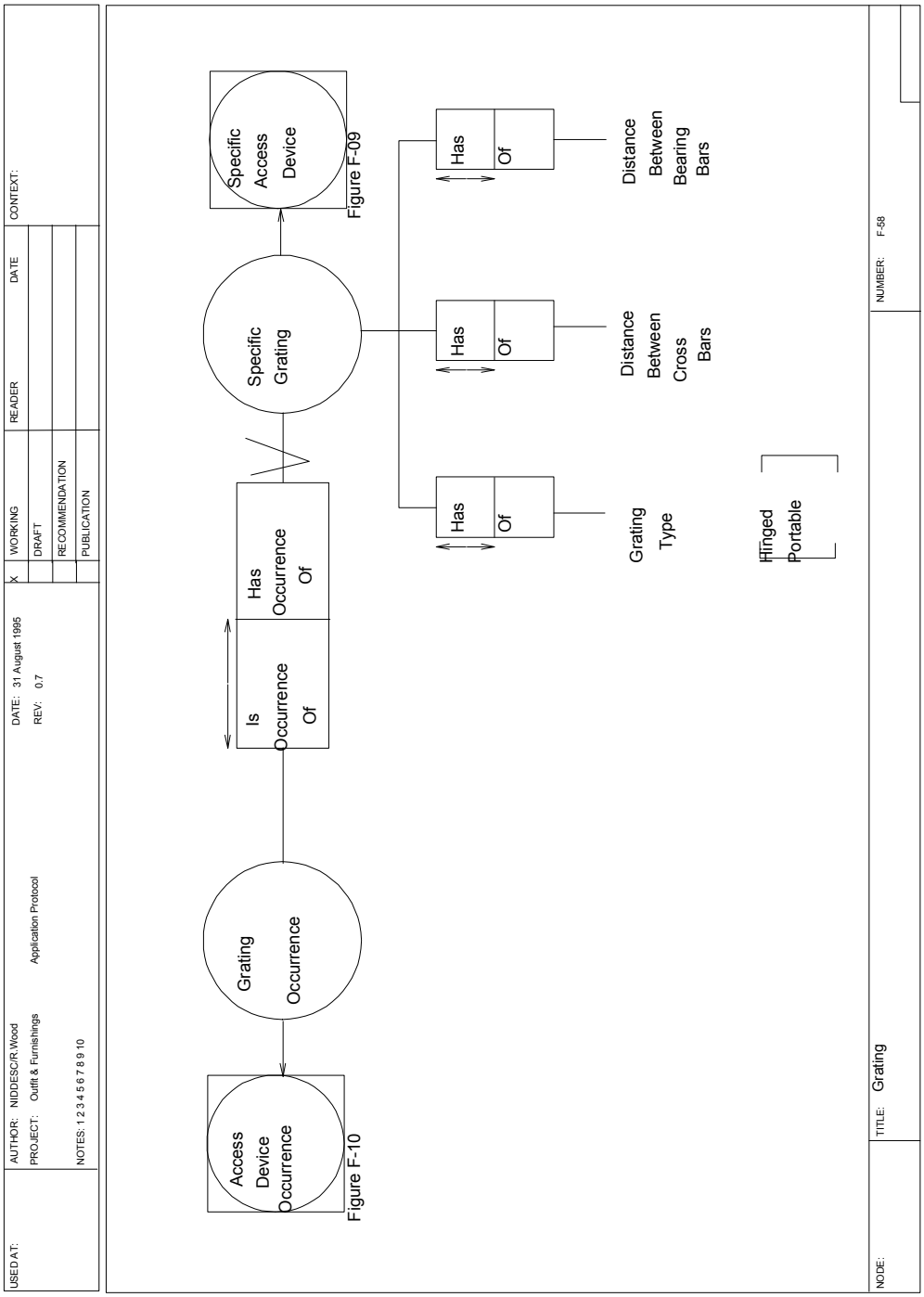

Figure F. 58 Grating

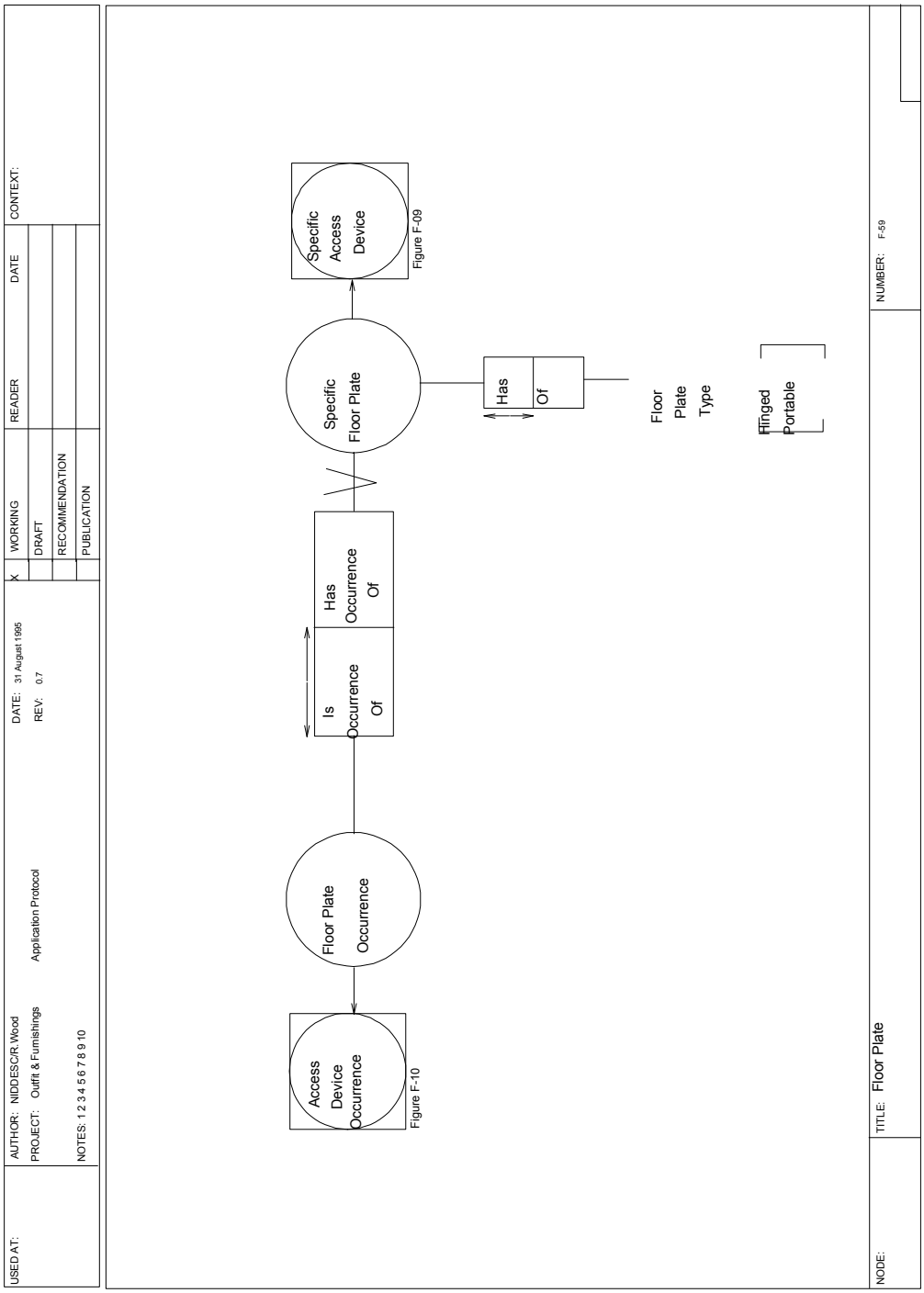

Figure F. 59 Floor Plate

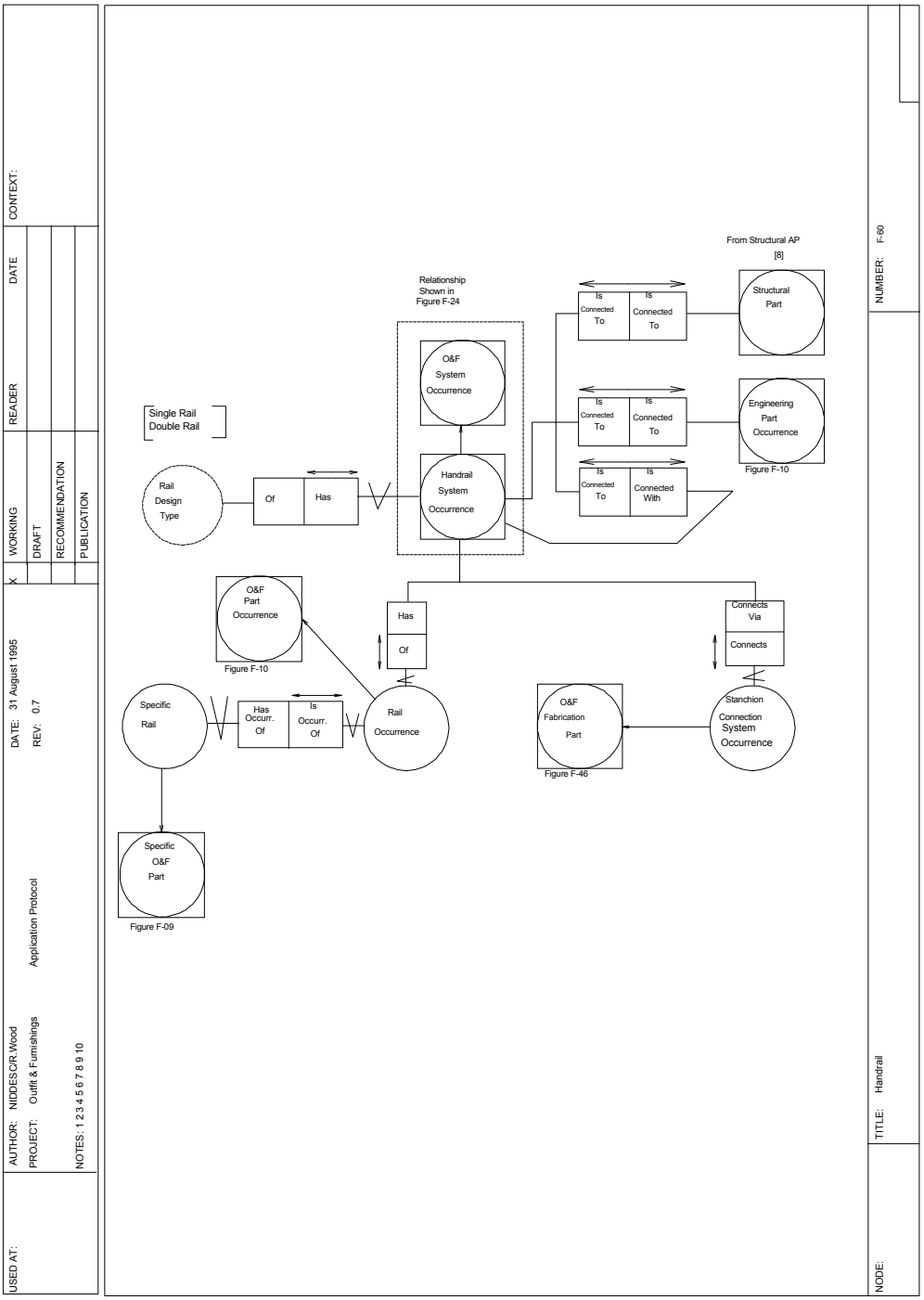

Figure F. 60 Handrail

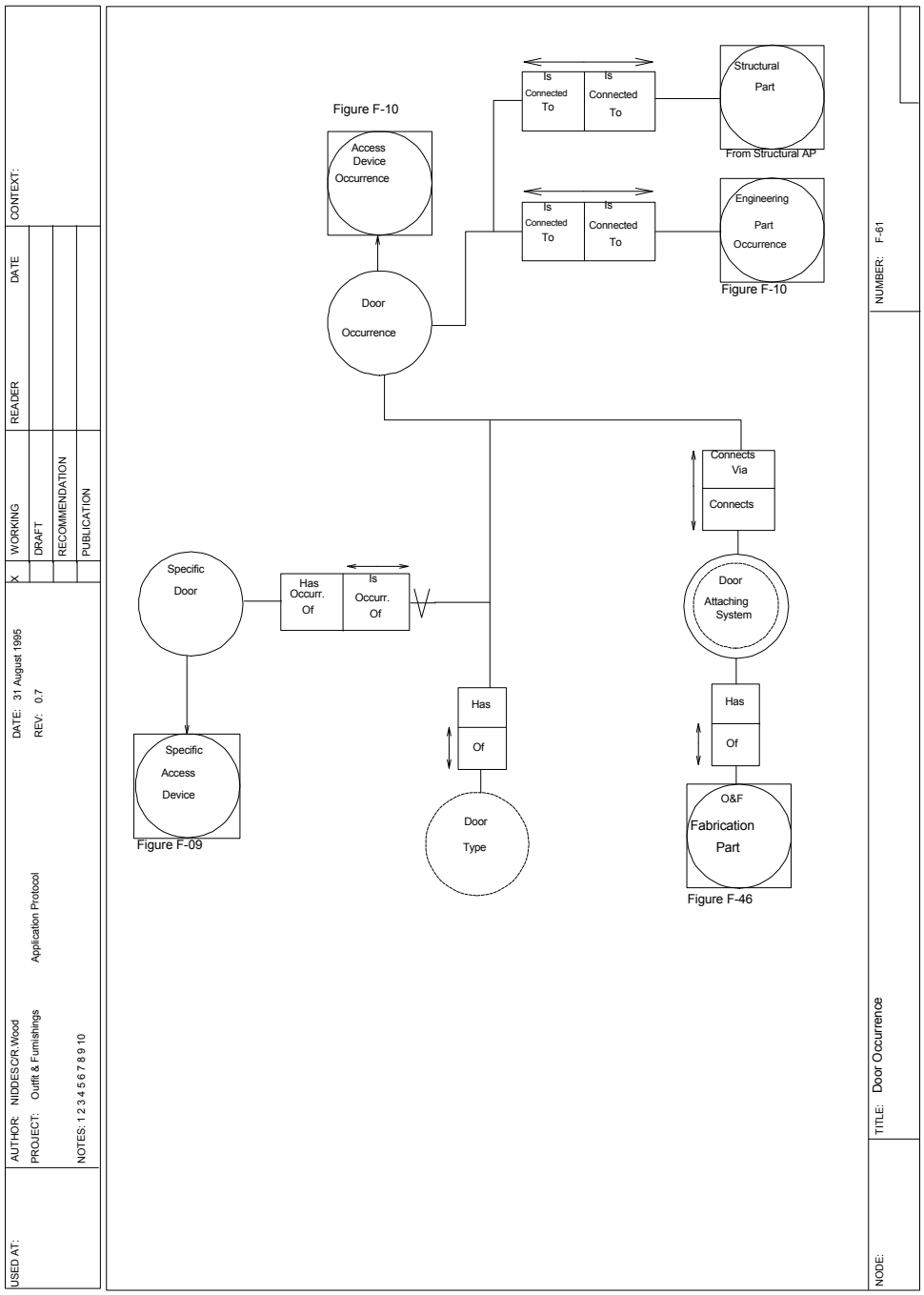

Figure F. 61 Door Occurrence

Annex G

(Informative)

AIM EXPRESS-G

This Section will be developed in future versions of the AP

Annex H

(Informative)

Application Protocol Usage Guide

Guide to Reading NIAM Diagrams

James A. Turner, University of Michigan, 12/6/91

The following is a definition of the symbols used in the Nijssen Information Analysis Method of binary relationship or binary semantic modeling. The notation consists of symbols for objects, roles between objects, and object and role constraints.

Object

Objects are tangible or abstract entities in an enterprise.

NOLOT--Non-Lexical Objects represent a set of non-representable entities having common properties. The symbol for a NONLOT is a solid circle containing the NOLOT name.

LOT—Lexical Objects represents a set of values of an entity, such as names and properties. The symbol for a LOT is a dashed circle containing the LOT name.

MODEL--The main NOLOT of the model. The remainder of the model usually supports its definition. The symbol for a MODEL is a heavy dashed circle containing the MODEL name. This is a NIAM extension.

CLONE—An object that occurs elsewhere on this or another NIAM model. Square may enclose either a LOT or NOLOT. This is a NIAM Extension.

CLONE—An object that occurs on a NIAM model in another document. Square may enclose either a LOT or NOLOT. This is a NIAM extension.

Role

The relationship or association between two objects is called and ROLE. Role names are read as AR1-B and B-R2-2-A, or members of A “play” role R1 with members of B and members of B play role R2 with members of A. Roles act as a relationship between the members of A and B.

R1:A->B
R2:B->A

The set of occurrences or role R1 is equal to the subset of the cartesian product of A and B for which the role A-R1-B is true.

The role shown as a divided box attached to the affected objects with solid lines. The role names, or phrases, are written either inside each box or outside the boxes and attached with a leader line.

IF one of the role names of omitted, the missing co-role is assumed to be the inverse of the existing role.

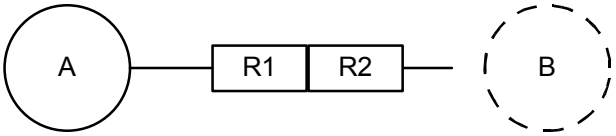

BRIDGE—A role between a NOLOT and a LOT.

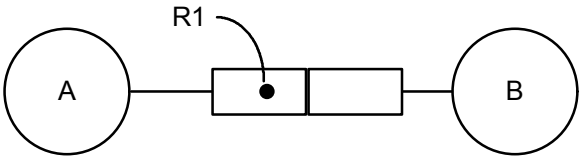

IDEA—A role between two NOLOTs.

Object Subtypes

Object subtyping is a method to describe the characteristics of the subsets of a NOLOT.

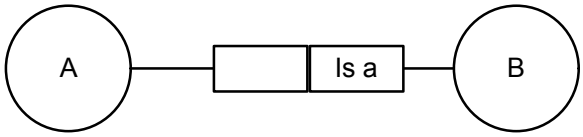

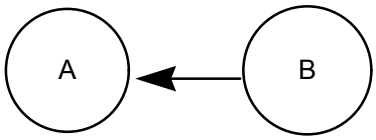

The “IS A” role is a common relationship between NOLOTs. As a result, a special symbol - directed line segment - is provided. The arrow from B to A designates object B as a SUBTYPE of supertype object A, or set B is a SUBSET of set A.

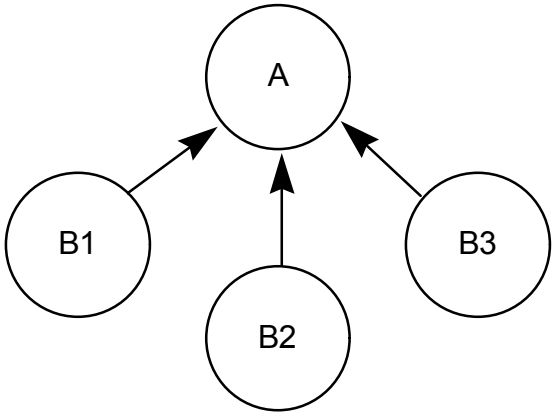

SUBTYPE, SUBSET - B1, B2 and B3 are SUBSET or SUBTYPES of A. Each member of A may be a member of B1, B2, B3, or any other subset of A. Or a member of A may be a member of any combination of B1,B2 or B3

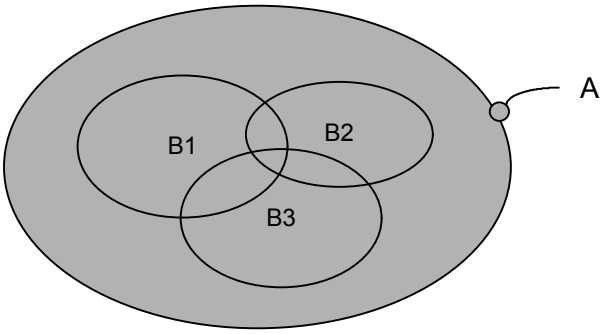

Subtype Constraints

Subtype constraints are rules which restrict the division of a NOLOT into subsets. Subtypes are shown as a line connecting all affected subtypes lines (arrowhead) with a circled letter superimposed. The letter designates the type of constraint.

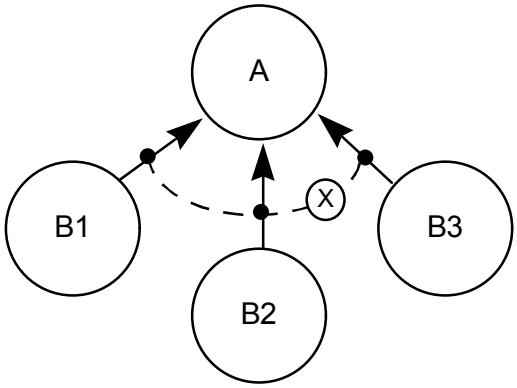

MUTUAL EXCLUSION—Each member of A can be a member of B1, B2, B3 or another subtype of A, B1, B2, and B3 are disjoint.

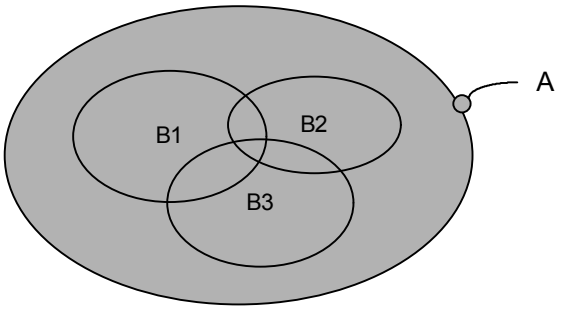

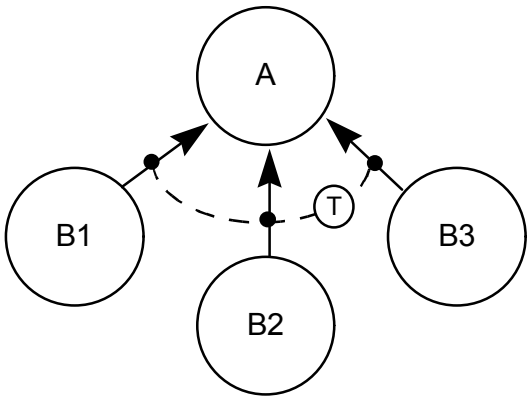

TOTAL—Each member of A must be a member of B1, B2, or B3; there are no other subtypes of A. Each member of A can be a member of more than one of the subtypes. B1, B2, and B3 may intersect.

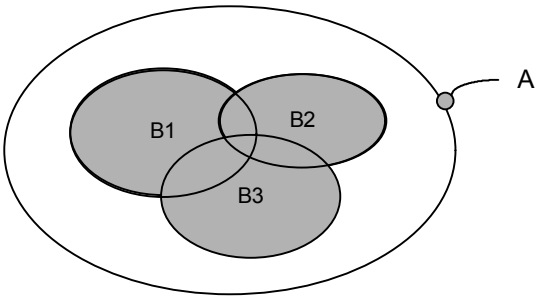

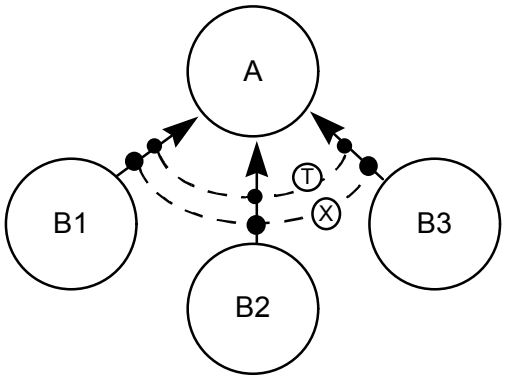

TOTAL MUTUAL EXCLUSION—Each member of A can either be in B1, B2, or B3; there are not other subtypes or A. B1, B2, and B3 are disjoint.

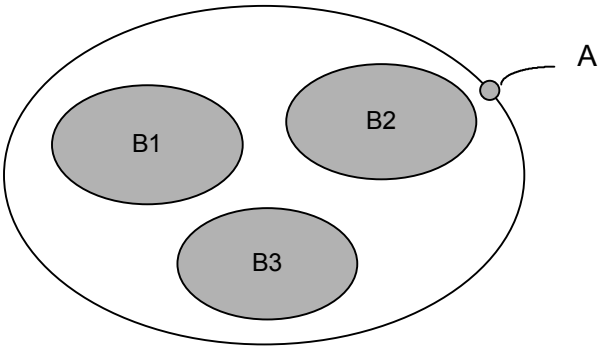

Cardinality Constraints

Cardinality constraints designate the qualities of objects and roles allowed in a role.

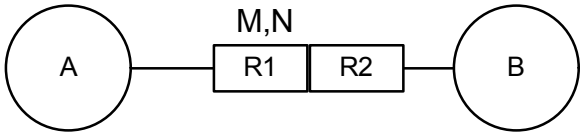

ROLE CARDINALITY—is shown as a minimum and maximum number above the affect role. Here, members of set A play between M and N roles R1 with members of B.

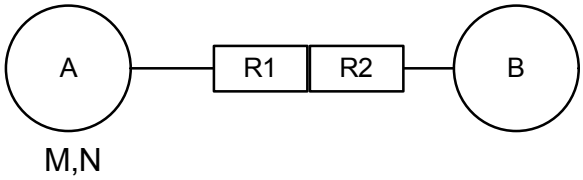

OBJECT CARDINALITY—is shown as a minimum and maximum number placed outside the affected object. Here, between M and N members of set A play role R1 with members of B.

Idea Constraints

Idea constraints are restricting rules on roles between NOLOTs and are used to define the semantics of the relationships between objects. Idea constraints are divided into UNIQUENESS and TOTAL constraints.

A UNIQUENESS constraint is drawn as a line above or below the role. The line may or may not have arrowheads drawn at both ends.

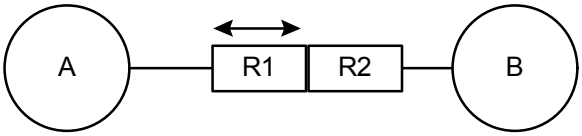

UNIQUENESS—Each member of A plays role R1 with zero or one member of B. Each member of B plays role R2 with zero, one, or many members of A.

The constraint defines R1 as an identifying role of A.

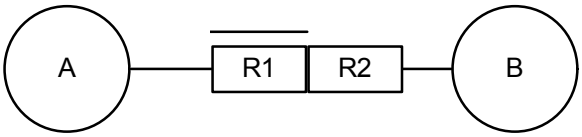

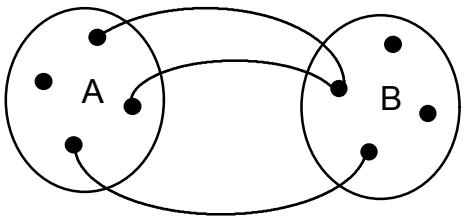

Many to one mapping

This constraint defines R2 as an identifying role of B.

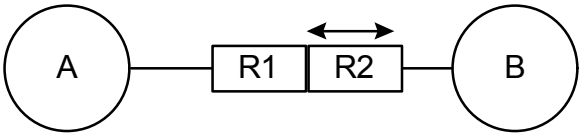

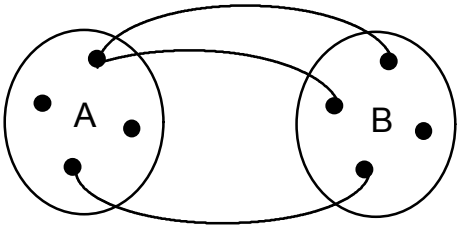

One to many mapping

UNIQUENESS—Each member of A plays role R1 with zero or one member of B. Each member of B plays role R2 with zero or one member of A.

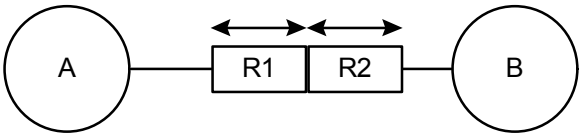

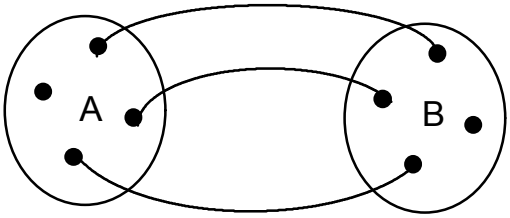

One to one mapping

UNIQUENESS—Every member of A plays role R1 with zero or many members of B. Each member of B plays role R2 with zero or many members of A.

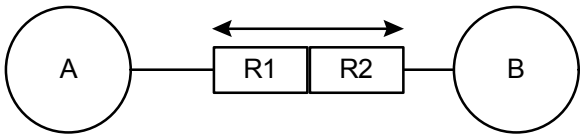

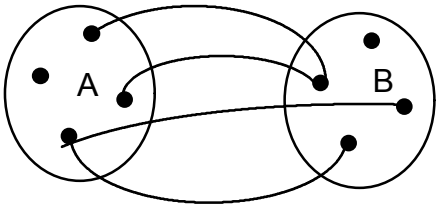

Many to many mapping

A TOTAL constraint is drawn as a “V” intersecting the line from the object to the role box, as a double line from the object to the role box, or as an upside-down “A” drawn above the constrained role.

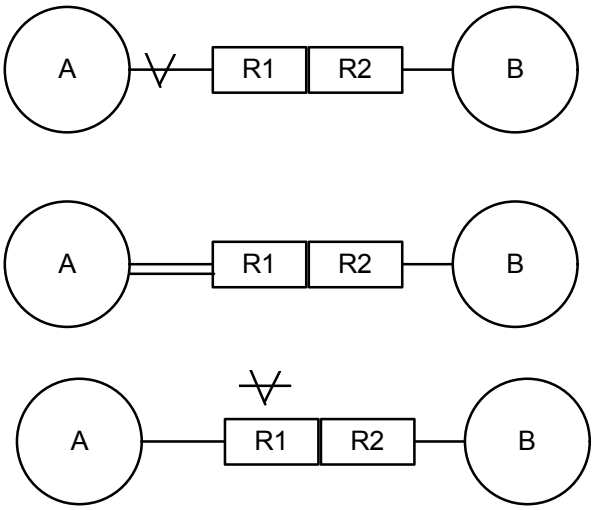

TOTAL—Each member of A plays role R1 with one or many members of B.

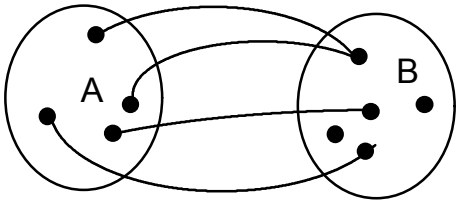

Combined Uniqueness and Total Constraints

Each member of A plays role R1 with one and only member of B. Each member of B plays role R2 with zero, one, or many members of A.

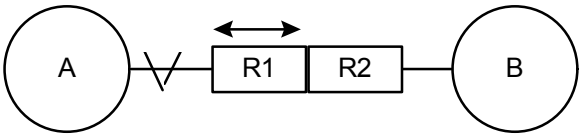

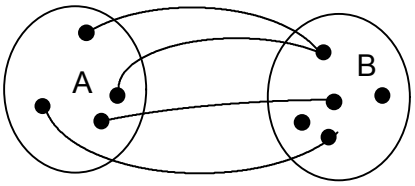

Total many to one mapping

Each member of A plays role R1 with one and only one member of B. Each member of B plays role R2 with one and only one member of A.

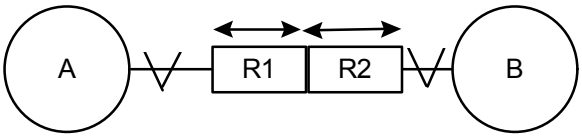

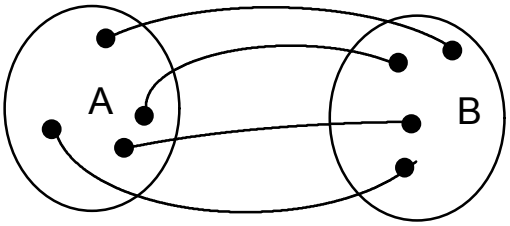

Total one to one mapping

Bridge Constraints

Bridge constraints are restricting rules on the roles between NOLOTs and LOTs. The symbols for bridge constraints are the same as the symbols for idea constraints.

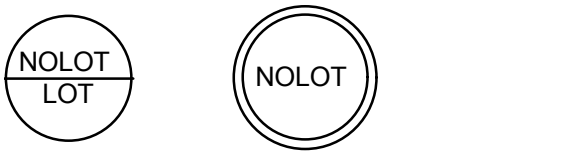

Often, a special object-type is provided for NOLOTs with a preferred one-to-one bridge to a corresponding LOT.

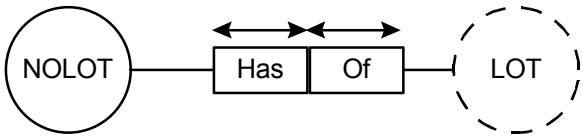

The symbols is either a divided solid circle with both the NOLOT and LOT name, or a solid circle containing the NOLOT name inscribed in a dashed circle.

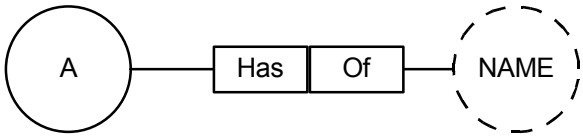

SYNO-HOMONYM-Each member of A has zero, one, or many NAMEs. A name is of zero, one. Or many members of A.

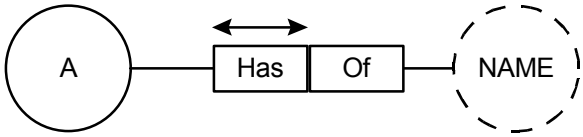

HOMONYM—Each member of A has zero or one NAME. A name is of zero, one, or many members of A.

Homonyms are identical terms which refer to different entities.

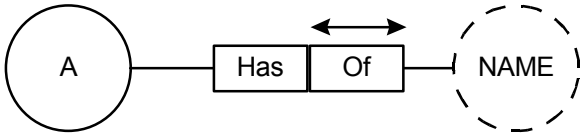

SYNONYM—Each member of NAME is of zero or one member of A. Each member of A has zero, one, or many names.

Synonyms are different terms which refer to the same entity.

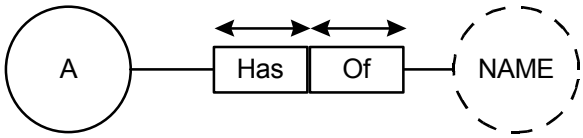

ONE-TO-ONE—Each member of A has zero or one NAME. Each NAME is of zero or one member of A.

Multiple Role Constraints

It is possible to provide restricting rules between roles. The rules and symbols are similar to those which govern and restrict set membership. Multiple role constraints are shown as a line between the affected role with a circle superimposed containing the constraint letter.

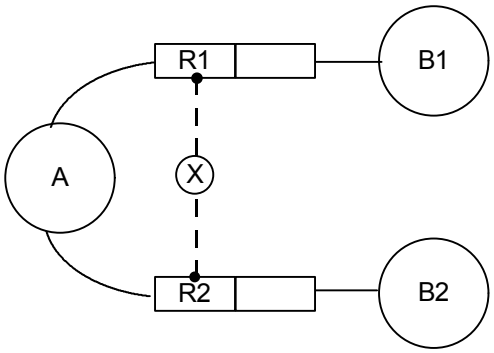

MUTUAL EXCLUSION—Each member of A which plays role R1 with members of B1 cannot play role R2 with members of B2. Members of A may play role with other sets.

The set of occurrences of R12 and R2 must be disjoint.

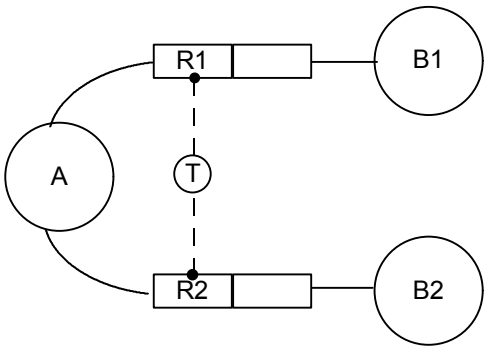

JOINT TOTAL—Members of A may play role R1 with members of B1. They may also play role R2 with members of B2.

The set of occurrences of R1 an dR2 may intersect.

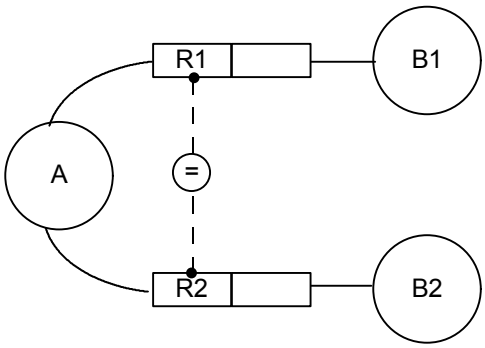

EQUALITY—Members of A which play role R1 with member of B1 must also play role R2 with member of B2.

The set of occurrences of roles R1 and R2 must be equal.

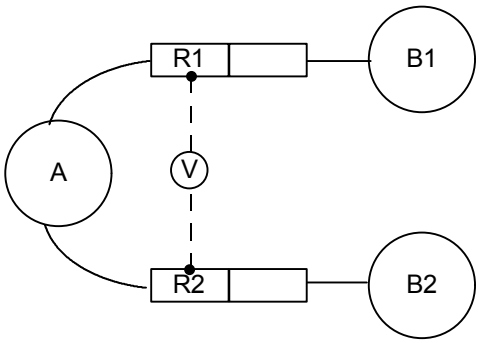

SUBSET—Member of A which play role R2 with members of B2 are subset of the members of A which play role R1 with members of B1.

The set of occurrences of R2 is a subset of the set of occurrences of R1.

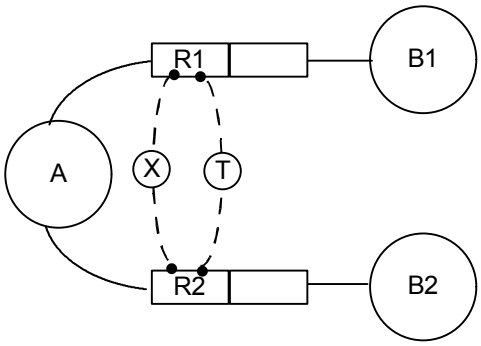

TOTAL MUTUAL EXCUSION—A member of A can either play role R1 with a member of B1 or it can play role R2 with a member of B2.

The set of occurrences of R1 and R2 must not intersect.

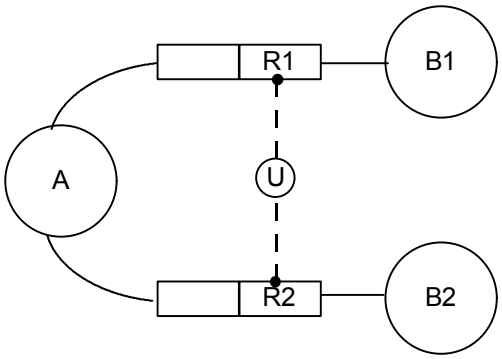

JOINT UNIQUENESS—A member of A is uniquely defined by a member of B1 playing role R1 and a member of B2 playing role R2.

Annex J

(Informative)

Technical Discussions

Annex K

(Informative)

Bibliography

[1] "Express Language Reference Model", ISO 10303-Part 11, Release Draft, International Standards Organization, 29 April 1992

[2] "NIDDESC Configuration Management Application Protocol", Version 0.6, March 25, 1992

[3] "NIDDESC Library Parts Application Protocol", Version 0.4, 21 October 1991

[4] "NIDDESC HVAC Application Protocol", Version 0.5, July 1992

[5] "NIDDESC Piping Application Protocol", Version 0.8, July 1992

[6] "NIDDESC Electrical/Cableway Application Protocol, Version 0.5, July 1992

[7] "Geometric and Topological Representation" ISO 10303-42, 16 May 1991

[8] "NIDDESC Ship Structure Application Protocol", Version 0.8, July 3, 1992

[9] "Fundamentals of Product Description and Support", Part 41, Version 3, May 3, 1991, Preliminary Content